WASHINGTON UNION HIGH SCHOOL
STUDENT SERVICES
WASHINGTON UNIFIED SCHOOL DISTRICT
6041 SOUTH ELM AVE.
FRESNO, CA 93706

1" = 50'-0" 1" = 40'-0" 1" = 30'-0" 1" = 20'-0" 1/8" = 1'-0" 1/4" = 1'-0"

TITLE 24, PART 11 CALGREEN

THIS PROJECT COMPLIES, AS FOLLOWS, WITH MANDATORY MEASURES AS OUTLINED IN DSA GL-4 "PROJECT SUBMITTAL GUIDELINE: CALGREEN CODE."

- SECTION 301.4.2.2: NEWLY CONSTRUCTED BUILDINGS TO COMPLY WITH CHAPTER 5 AS ADOPTED BY DSA-SS.
- SECTION 301.4.3: MINIMUM REHABILITATED LANDSCAPE AREA REQUIREMENT.

CHAPTER 5:

- SECTION 5.106.4.2.2: ONE NEW BICYCLE LOCKER TO ACCOMMODATE MIN. 2 NEW STAFF BICYCLES. SEE NOTES #21, SHEET A1.01.
- SECTION 5.106.3: NO PARKING IS BEING ADDED TO THE CAMPUS UNDER THIS APPLICATION.
- SECTION 5.106.8: NO EXTERIOR LIGHTING BEING PROVIDED UNDER THIS APPLICATION.
- SECTION 5.106.10: STORM WATER FROM NEW BUILDING IS COLLECTED BY EXISTING SITE STORM DRAIN SYSTEM.

ABBREVIATIONS

ABOVE	ABV						
ABOVE FINISHED FLOOR	A.F.F.	EACH	EA.	LAMINATE	LAM.	SANITARY NAPKIN DISPENSER	S.N.D.
ACCESSIBLE	A.C.C.	ELECTRIC	ELEC.	LAVATORY	LAV.	SANITARY NAPKIN RECEPTACLE	S.N.R.
ACOUSTICAL	ACOUST.,ACT.	ELECTRIC DRINKING FOUNTAIN	E.D.F.	LEFT HAND	L.H.	SCHEDULE	SCH.
ADJACENT	ADJ.	ELEVATION	ELEV.,EL.	LINOLEUM	LINO.	SEAT COVER DISPENSER	S.C.D.
ADJUSTABLE	ADJUST.	EQUAL	LONG		LG.	SECTION	SECT.
AIR CONDITIONING	A/C	EQUIPMENT	EQUIP.			SHEATHING	SHTG.
ALUMINUM	ALUM.,AL.	ESTIMATE	EST.	MACHINE BOLT	M.B.	SHEET	SHT.
ANCHOR BOLT	AB.	EXHAUST	EXH.	MACHINE SCREW	M.S.	SHEET METAL	S.M.
BENT ANCHOR BOLT	BAB.	EXHAUST FAN	E.F.	MANUFACTURER	MFGR.	SHEET METAL & AIR CONDITIONING CONTRACTOR NATIONAL ASSOCIATION	SMACNA
ANODIZED	ANOD.	EXISTING	(E)	MATERIAL	MAT.,MATL.	SHEET METAL SCREWS	S.M.S.
ARCHITECTURAL	ARCH.	EXPANSION	EXP.	MAXIMUM	MAX.	SHELVES	SH.
ASPHALT CONCRETE	A.C.	EXPANSION JOINT	E.J.	MECHANICAL	MECH.	SINK	S.
		EXTERIOR	EXT.	MEDIUM	MED.	SOAP DISPENSER	S.D.
BACKBOARD	BACKBRD.			MEMBRANE	MBNE.	SPECIFICATION	SPEC.
BEAM	BM.	FABRIC WALL COVERING	F.W.C.	METAL	MTL.	SPLASH	SPL.
BENCH MARK	B.M.	FACE OF BLOCK	F.O.B.	METAL PLANAR CEILING	M.P.C.	SPLASH BLOCK	S.B.
BETWEEN	BTWN.	FACE OF CONCRETE	F.O.C.	METAL TOILET PARTITION	M.T.P.	SQUARE	SQ.
BLOCK	BLK.	FACE OF STUD	F.O.S.	MILLIMETER	MILL.	STAINLESS STEEL	S.S.
BOTTOM	BTM.,BTTM.	FACE OF WALL	F.O.W.	MINIMUM	MIN.	STANDARD	STD.
BUILDING	BLDG.	FACTORY FINISH	F.F.	MISCELLANEOUS	MISC.	STEEL	STL.
		FEET/FOOT	FT.	MULLION	MULL.	STORAGE	STOR.
CABINET	CAB.	FEMININE NAPKIN DISPOSAL	F.N.D.			STIFFENER	STIFF.
CADMIUM	CAD.	FIBER GLASS	F.G.,FIBERGL.	NOT IN CONTRACT	N.I.C.	STRUCTURAL	STRUCT.,ST.
CARPET	CPT.	FINISH	FIN.	NOT TO SCALE	N.T.S.	SUSPENDED	SUSP.
CARRIAGE BOLT	C.B.	FIRE EXTINGUISHER CABINET	F.E.C.	NUMBER	NO.,#	SUSPENDED ACOUSTIC CEILING TILE	S.A.T.C.
CAST IRON	C.I.	FIRE RATED GYP. BD.	F.R.G.B.			SWITCH	SW.
CEILING	CLG.,CEL'G.	FIXED GLASS	F.G.	OPPOSITE HAND	O.H.		
CEILING DIFFUSER	C.D.	FLAT HEAD	F.H.	OPPOSITE	OPP.	TELEPHONE	TEL.,TELE.
CEILING GRILLE	C.G.	FLOOR	FLR.	ON CENTER	O.C.	THICK	THK.
CEILING REGISTER	C.R.	FLOOR DRAIN	F.D.	OPENING	OPG.	THRESHOLD	THR.
CEMENT	CEM.	FLUORESCENT	FLUOR.	OUTSIDE DIAMETER/DIMENSION	O.D.	TOILET PAPER	T.P.
CENTERLINE	C.L.	FOOTING	FTG.	OVAL HEAD	O.H.	TOILET PAPER HOLDER	T.P.H.
CERAMIC TILE	C.T.	FOUNDATION	FDN.	OVER (ON)	O/	TOLERANCE	TOL.
CIRCUIT	CRT.	FRAMING	FRM'G.	OVERFLOW	OVFL.	TRANSFORMER	TRANS.
CLEANOUT	C.O.			OVERHAND	OH.	TYPICAL	TYP.
CLEAR	CLR.	GAGE/GAUGE	GA.				
COLD WATER	C.W.	GALVANIZE	GALV.	PAINT	PT.	UNDERWRITERS LABORATORY	U.L.
COLUMN	COL.	GALVANIZED IRON	G.I.	PAIR	PR.	UNLESS OTHERWISE NOTED	U.O.N.
COMBINATION/COMBUSTION	COMB.	GLASS	GL.	PAPER TOWEL DISPENSER	P.T.D.	URINAL	UR.
COMPOSITION, COMPOSITE	COMP.	GRAB BAR	G.B.	PLASTIC	PLAS.		
CONCRETE	CONC.	GRADE	GR.	PLATE	PL.	VENTILATE/VENTILATION	VENT.
CONCRETE MASONRY UNIT	C.M.U.	GROUND	GND.	PLATED	PLTD.	VENT THROUGH ROOF	V.T.R.
CONDITION	COND.	GYPSUM	GYP.	PLUMBING	PLBG.	VERIFY IN FIELD	V.I.F.
CONNECTION	CONN.	GYPSUM BOARD	G.B.,GYP.BD.	PLYWOOD	PLYWD.	VERTICAL	VERT.
CONSTRUCTION	CONST.			POINT	PT.	VINYL COMPOSITION TILE	V.C.T.
CONSTRUCTION JOINT	C.J.	HARDWARE	HDW,HDWR.	POINT OF CONNECTION	P.O.C.	VINYL WALL COVERING	V.W.C.
CONTINUOUS	CONT.	HEAD	HD.	POUND	LB.,#	VOLUME	VOL.
CONTRACTOR	CONTR.	HEADER	HDR.	POUND PER SQ. FOOT	P.S.F.		
COORDINATE	COORD.	HEIGHT	HT.,H.	POUND PER SQ. INCH	P.S.I.	WATER CLOSET	W.C.
COUNTERSINK	CSK.	HOLLOW METAL	H.M.	QUARTER	QTR.	WATER PROOF	W.P.
		HORIZONTAL	HORIZ.			WATER RESISTANT	W.R.
DEPARTMENT	DEPT.	HOT WATER	H.W.	RADIUS	R.,RAD.	WIDTH	W.
DEPTH, DEEP	D.	HOSE BIBB	H.B.	RAINWATER LEADER	R.W.L.	WIRE GLASS	WGL.
DETAIL	DET.,DTL.			RECEPTACLE	RECEPT.	WITH	W/
DIAGONAL	DIAG.	INCH	IN.	REFLECTED	REFL'D.	WITHOUT	W/O
DIAMETER	DIA.	INSIDE DIAMETER/DIMENSION	I.D.	REFRIGERATOR	REF.	WOOD	WD.
DIMENSION	DIM.	INSULATION	INSUL.	REINFORCING	REINF.	WOOD SCREWS	W.S.
DISPENSER/DISPOSAL	DISP.	INTERIOR	INT.	REMOVABLE	REMOV.		
DIVISION	DIV.			REQUIRED	REQ'D.		
DOOR	DR.	JAMB	JB.	RESILIENT	RES.		
DOUBLE	DBL	JOINT	JT.	REVISE, REVISION	REV.		
DOWN	DN.			RIGHT HAND	R.H.		
DOWNSPOUT	D.S.			ROOF DRAIN	R.D.		
DRAWING	DRWG.			RUBBER TOPSET BASE	R.T.B.		
DRINKING FOUNTAIN	D.F.						

PROJECT DIRECTORY

OWNER:
RANDY MORRIS, SUPERINTENDENT
WASHINGTON UNIFIED SCHOOL DISTRICT
7950 S. ELM AVENUE
FRESNO, CA 93706
TEL: (559) 495-5626
EMAIL: rmorris@wusd.ws

ASBESTOS CONSULTING AND TESTING:
TROY F. BROOKS
BROOKS AND ASSOCIATES, INC.
613 EAST HARVARD AVE., SUITE 201
CLOVIS, CA 93612
TEL: (559) 298-9135
EMAIL: tfbrooks@ppeng.com

ARCHITECT:
FELIPE CEBALLOS
INTEGRATED DESIGNS by SOMAM, Inc.
6011 N. FRESNO ST. SUITE #130
FRESNO, CA 93710
TEL: (559) 436-0881
EMAIL: fceballos@somam.com

MECHANICAL ENGINEER:
JOELON CHINN
JNL MECHANICAL DESIGN
11156 CA-41 SUITE 105B,
MADERA, CA 93636
TEL: (559) 656-1170
EMAIL: joelon@jnlmech.com

ELECTRICAL ENGINEER:
STEVE EASTHAM, PE
ROSE, SING, EASTHAM & ASSOCIATES
131 S. DUNWORTH ST.
VISALIA, CA 93292
TEL: (559) 733-2671 x 101
EMAIL: seastham@rse-eng.com

FIRE PROTECTION:
RICHARD SERVER
MS FIRE
3644 S. BAGLEY AVE.
FRESNO, CA 93725
TEL: (559) 485-4400
EMAIL: richard@msfirepro.com

CIVIL ENGINEER:
ALAN MOK
ALAN MOK ENGINEERING
3433 W. SHAW AVE. SUITE 106
FRESNO, CA 93711
TEL: (559) 432-6879
EMAIL: alan@alanmokengineering.com

STRUCTURAL ENGINEER:
DUSTIN LEE
CORNERSTONE STRUCTURAL ENGINEERING GROUP
986 W. ALLUVIAL AVE. SUITE 201
FRESNO, CA 93711
TEL: (559) 320-3200
EMAIL: dlee@cseg.com

VICINITY MAP

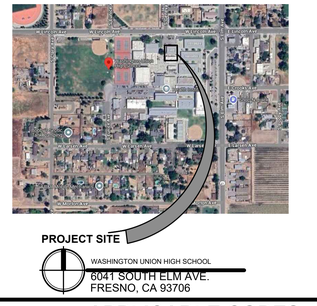

PROJECT SITE
WASHINGTON UNION HIGH SCHOOL
6041 SOUTH ELM AVE.
FRESNO, CA 93706

APPLICABLE CODES

PARTIAL LIST OF APPLICABLE CODES AS OF JANUARY 1, 2023*

- 2025 CALIFORNIA ADMINISTRATIVE CODE (CAC), PART 1, TITLE 24 CCR.
- 2022 CALIFORNIA BUILDING CODE (CBC), PART 2, TITLE 24 CCR (2021 INTERNATIONAL BUILDING CODE, VOL. 1 & 2, AND 2022 CALIFORNIA AMENDMENTS).
- 2022 CALIFORNIA ELECTRICAL CODE (CEC), PART 3, TITLE 24 CCR (2020 NATIONAL ELECTRICAL CODE AND 2022 CALIFORNIA AMENDMENTS).
- 2022 CALIFORNIA MECHANICAL CODE (CMC), PART 4, TITLE 24 CCR (2021 IAPMO UNIFORM MECHANICAL CODE AND 2022 CALIFORNIA AMENDMENTS).
- 2022 CALIFORNIA PLUMBING CODE (CPC), PART 5, TITLE 24 CCR (2021 IAPMO UNIFORM PLUMBING CODE AND 2022 CALIFORNIA AMENDMENTS).
- 2022 CALIFORNIA ENERGY CODE (CEC), PART 6, TITLE 24 CCR.
- 2022 CALIFORNIA FIRE CODE (CFC), PART 9, TITLE 24 CCR (2021 INTERNATIONAL FIRE CODE AND 2022 CALIFORNIA AMENDMENTS).
- 2022 CALIFORNIA EXISTING BUILDING CODE (CEBC), PART 10, TITLE 24 CCR (2021 INTERNATIONAL EXISTING BUILDING CODE AND 2022 CALIFORNIA AMENDMENTS).
- 2022 CALIFORNIA GREEN BUILDING STANDARDS CODE (CALGREEN), PART 11, TITLE 24 CCR.
- 2022 CALIFORNIA REFERENCED STANDARDS CODE, PART 12, TITLE 24 CCR TITLE 19 CCR, PUBLIC SAFETY, STATE FIRE MARSHAL REGULATIONS.
- 2022 NFPA-13 STANDARD FOR THE INSTALLATION OF SPRINKLER SYSTEMS.
- 2022 NFPA-72 NATIONAL FIRE ALARM AND SIGNALING CODE (CA AMENDED).
- 2019 NFPA-80 STANDARD FOR FIRE DOORS AND OTHER OPENING PROTECTIVES.
- 2003 UL-464 AUDIBLE SIGNALING DEVICES FOR FIRE ALARM AND SIGNALING SYSTEMS, INCLUDING ACCESSORIES.
- 1999 UL-521 STANDARD FOR HEAT DETECTORS FOR FIRE PROTECTIVE SIGNALING SYSTEMS.
- 2002 (R2010) UL-1971 STANDARD FOR SIGNALING DEVICES FOR THE HEARING IMPAIRED.
- FOR A COMPLETE LIST OF APPLICABLE NFPA STANDARDS REFER TO 2022 CBC (SFM) CHAPTER 35 AND CALIFORNIA FIRE CODE CHAPTER 80.
- SEE CALIFORNIA BUILDING CODE CHAPTER 35 FOR STATE OF CALIFORNIA AMENDMENTS TO THE NFPA STANDARDS.

STATEMENT OF GENERAL CONFORMANCE

ARCHITECT'S STATEMENT FOR PLANS PREPARED BY OTHER LICENSED DESIGN PROFESSIONALS AND/OR CONSULTANTS

THESE DRAWINGS AND/OR SPECIFICATIONS AND/OR CALCULATIONS FOR THE ITEMS LISTED IN THE SHEET INDEX AND CHECKED BELOW HAVE BEEN PREPARED BY OTHER DESIGN PROFESSIONALS OR CONSULTANTS WHO ARE LICENSED AND/OR AUTHORIZED TO PREPARE SUCH DOCUMENTS IN THIS STATE. THESE DOCUMENTS HAVE BEEN EXAMINED BY ME FOR DESIGN INTENT AND HAVE BEEN FOUND TO MEET THE APPROPRIATE REQUIREMENTS OF TITLE 24, CALIFORNIA CODE OF REGULATIONS AND THE PROJECT SPECIFICATIONS PREPARED BY ME.

THE ITEMS CHECKED BELOW ARE ACCEPTABLE FOR INCORPORATION INTO THE CONSTRUCTION OF THIS PROJECT FOR WHICH I AM THE INDIVIDUAL DESIGNATED TO BE IN GENERAL RESPONSIBLE CHARGE (OR FOR WHICH I HAVE DELEGATED RESPONSIBILITY FOR THIS PORTION OF THE WORK.)

SEE THE SHEET INDEX ON THIS SHEET FOR DRAWINGS OTHER THAN ARCHITECTURAL.

THE STATEMENT OF GENERAL CONFORMANCE SHALL NOT BE CONSTRUED AS RELIEVING ME OF MY RIGHTS, DUTIES, AND RESPONSIBILITIES UNDER SECTIONS 17302 AND 81138 OF THE EDUCATION CODE AND SECTIONS 4-336, 4-341 AND 4-334 OF TITLE 24, PART 1. (TITLE 24, PART 1, SECTION 4-317 (b)).

APPLICABLE:

☒ CIVIL ☒ MECHANICAL ☒ ELECTRICAL ☒ PLUMBING ☒ STRUCTURAL
☒ FIRE PROTECTION

I FIND THAT:

☒ ALL DRAWINGS OR SHEETS LISTED ON THE COVER OR INDEX SHEET
☐ THIS DRAWING OR PAGE
☒ IS/ARE IN GENERAL CONFORMANCE WITH THE PROJECT DESIGN INTENT, AND
☒ HAS/HAVE BEEN COORDINATED WITH THE PROJECT PLANS AND SPECIFICATIONS.

Felipe Ceballos — 08/11/25
SIGNATURE OF THE ARCHITECT/ENGINEER — DATE
NAME, TITLE, AFFILIATION

C-12834 — 8/31/27
LICENSED NUMBER — EXPIRATION DATE

SUBSTITUTION NOTE

SUBSTITUTION AFFECTING DSA-REGULATED ITEMS SHALL BE CONSIDERED AS CONSTRUCTION CHANGED DOCUMENTS (CCD's) AND SHALL BE APPROVED PRIOR TO FABRICATION AND INSTALLATION PER DSA IR A-6 AND SECTION 338(c) PART 1, TITLE 24 CCR

BUILDING DATA

STUDENT SERVICES BUILDING

OCCUPANCY = B

TYPE OF CONSTRUCTION = VB (SPRINKLERED)

SQUARE FOOTAGE	= 8,813 S.F.
BUILDING OVERHANGS	= 1,687 S.F.
TOTAL	10,500 S.F.

PER 2022 C.B.C. TABLE 506:
ALLOWABLE AREA = 36,000 S.F.
10,500 S.F. < 36,000 S.F. BUILDING = OK

SYMBOLS

SECTION KEY
A — SECTION IDENTIFICATION
A3.01 — SHEET NUMBER

DETAIL KEY
1 — DETAIL NUMBER
A2.01 — SHEET NUMBER

INTERIOR ELEVATION KEY
A — ELEVATION DIRECTION
D — ELEVATION IDENTIFICATION
1 — SHEET NUMBER
A4.01

ELEVATION DATUM
+1'-0" — INDICATES HEIGHT IN RELATION TO 0'-0"

ROOM NUMBER/FINISH TAG
OFFICE — ROOM NAME
100 — ROOM NUMBER

A — WINDOW SCHEDULE KEY
1 — KEYNOTE SCHEDULE KEY
201 — DOOR SCHEDULE KEY

INSPECTOR OF RECORD

THIS PROJECT REQUIRES A CLASS 1. THE INSPECTOR OF RECORD SHALL BE DSA APPROVED AND CONFORM TO THE CLASSIFICATION CRITERIA AS PROVIDED IN INTERPRETATION OF REGULATIONS (IR) A-7, DATED FEB 28, 2025.

THE INSPECTOR SHALL BE EMPLOYED BY THE DISTRICT AND APPROVED BY THE RESPONSIBLE ARCHITECT AND DSA.

A "DSA CERTIFIED" PROJECT INSPECTOR EMPLOYED BY THE DISTRICT (OWNER) AND APPROVED BY THE DSA SHALL PROVIDE CONTINUOUS INSPECTION OF THE WORK. THE DUTIES OF THE INSPECTOR ARE DEFINED IN SECTION 4-342, PART 1, TITLE 24, CCR.

A DSA ACCEPTED TESTING LABORATORY DIRECTLY EMPLOYED BY THE DISTRICT (OWNER) SHALL CONDUCT ALL THE REQUIRED TESTS AND INSPECTIONS FOR THE PROJECT.

NOTES

A. THE CALIFORNIA ENERGY CODE SECTION 10-103 REQUIRES ACCEPTANCE TESTING ON ALL NEWLY INSTALLED LIGHTING CONTROLS, MECHANICAL SYSTEMS, ENVELOPES, AND PROCESS EQUIPMENT AFTER INSTALLATION AND BEFORE PROJECT COMPLETION. AN ACCEPTANCE TEST IS A FUNCTIONAL PERFORMANCE TEST TO HELP ENSURE THAT NEWLY INSTALLED EQUIPMENT IS OPERATING AND IN COMPLIANCE WITH THE ENERGY CODE.

B. LIGHTING CONTROLS ACCEPTANCE TESTS MUST BE PERFORMED BY A CERTIFIED LIGHTING CONTROLS ACCEPTANCE TEST TECHNICIAN (ATT).

C. MECHANICAL SYSTEM ACCEPTANCE TESTS MUST BE PERFORMED BY A CERTIFIED MECHANICAL ATT FOR PROJECTS SUBMITTED ON OR AFTER OCTOBER 1, 2021.

D. ENVELOPE AND PROCESS EQUIPMENT ACCEPTANCE TESTS SHALL BE PERFORMED BY THE INSTALLING CONTRACTOR, ENGINEER / ARCHITECT OF RECORD (AOR), OR THE OWNER'S AGENT.

E. A LISTING OF CERTIFIED ATT CAN BE FOUND AT: HTTPS://WWW.ENERGY.CA.GOV/PROGRAMS-AND-TOPICS/PROGRAMS/ACCEPTANCE-TEST-TECHNICIAN-CERTIFICATION-PROVIDER-PROGRAM/ACCEPTANCE.

F. THE ACCEPTANCE TESTING PROCEDURES MUST BE REPEATED, AND DEFICIENCIES MUST BE CORRECTED BY THE BUILDER OR INSTALLING CONTRACTOR UNTIL THE CONSTRUCTION / INSTALLATION OF THE SPECIFIED SYSTEMS CONFORM AND PASS THE REQUIRED ACCEPTANCE CRITERIA.

G. PROJECT INSPECTORS WILL COLLECT THE FORMS TO CONFIRM THAT THE REQUIRED ACCEPTANCE TESTS HAVE BEEN COMPLETED.

DSA NOTES

- CHANGES TO THE APPROVED DRAWINGS AND SPECIFICATIONS SHALL BE MADE BY AN ADDENDUM OR A CONSTRUCTION CHANGED DOCUMENT (CCD) APPROVED BY THE DIVISION OF THE STATE ARCHITECT, AS REQUIRED BY SECTION 4-338, PART 1, TITLE 24, CCR.
- A "DSA CERTIFIED" PROJECT INSPECTOR EMPLOYED BY THE DISTRICT (OWNER) AND APPROVED BY THE DSA SHALL PROVIDE CONTINUOUS INSPECTION OF THE WORK. THE DUTIES OF THE INSPECTOR ARE DEFINED IN SECTION 4-342, PART 1, TITLE 24, CCR.
- A DSA ACCEPTED TESTING LABORATORY DIRECTLY EMPLOYED BY THE DISTRICT (OWNER) SHALL CONDUCT ALL THE REQUIRED TESTS AND INSPECTIONS FOR THE PROJECT.
- THE INTENT OF THESE DRAWINGS AND SPECIFICATIONS IS FOR NEW CONSTRUCTION TO BE IN ACCORDANCE WITH TITLE 24, CCR. SHOULD ANY EXISTING CONDITIONS SUCH AS DETERIORATION OR NON-COMPLYING CONSTRUCTION BE DISCOVERED WHICH IS NOT COVERED BY THE CONTRACT DOCUMENTS WHEREIN THE FINISHED WORK WILL NOT COMPLY WITH TITLE 24, CCR, A CONSTRUCTION CHANGE DOCUMENT (CCD), OR A SEPARATE SET OF PLANS AND SPECIFICATIONS, DETAILING AND SPECIFYING THE REQUIRED WORK SHALL BE SUBMITTED TO AND APPROVED BY DSA BEFORE PROCEEDING WITH THE WORK. (SECTION 4-317(C), PART 1, TITLE 24, CCR)
- GRADING PLANS, DRAINAGE IMPROVEMENTS, ROAD AND ACCESS REQUIREMENTS AND ENVIRONMENTAL HEALTH CONSIDERATIONS SHALL COMPLY WITH ALL LOCAL ORDINANCES.
- NEW BUILDINGS SHALL BE PROVIDED WITH EMERGENCY RESPONDER RADIO COVERAGE IN ACCORDANCE WITH CALIFORNIA FIRE CODE SECTION 510. DSA WILL NOT BE REVIEWING OR APPROVING PLANS FOR THE REQUIRED EMERGENCY COMMUNICATION SYSTEM.
- ARCHITECT OF RECORD (AOR) SHALL CONTACT THE LOCAL FIRE DEPARTMENT AND / OR EMERGENCY COMMUNICATIONS AUTHORITY TO OBTAIN DESIGN AND EQUIPMENT SPECIFICATIONS, AND TESTING AND ACCEPTANCE CRITERIA. IT IS THE RESPONSIBILITY OF THE DESIGN PROFESSIONAL / AOR TO SUBMIT PLANS AND REQUESTED DOCUMENTATION, AND APPLICABLE FEES, TO THE LOCAL AUTHORITY HAVING JURISDICTION FOR REVIEW AND APPROVAL. UPON COMPLETION, COPIES OF THE APPROVED PLANS, EQUIPMENT DATA SHEETS, AND PROOF OF TESTING AND ACCEPTANCE DOCUMENTATION SHALL BE PROVIDED TO THE SCHOOL DISTRICT. THE PROJECT INSPECTORS SHALL VERIFY THAT THE DOCUMENTATION IS PROVIDED TO THE SCHOOL DISTRICT.
- ALL CONSTRUCTION AND DEMOLITION SHALL BE IN ACCORDANCE WITH CHAPTER 33 OF THE CBC AND CFC, AND THE WRITTEN SITE FIRE SAFETY PLAN

SHEET INDEX

SHT. NO.	DESCRIPTION
GENERAL	
T0.00	TITLE SHEET
1 SHEET	
CIVIL	
C1	TOPOGRAPHIC SURVEY
C2	DEMOLITION PLAN
C3	GRADING AND DRAINAGE PLAN
C4	UTILITY PLAN
C5	DETAILS
5 SHEETS	
ARCHITECTURAL	
A0.01	SCHEDULES
A0.10	CODE ANALYSIS
A1.00	MASTER SITE PLAN
A1.01	DEMO & ENLARGED SITE PLAN
A1.02	SITE DETAILS
A2.01	DIMENSION FLOOR PLAN
A2.02	KEYNOTE FLOOR PLAN
A2.03	ENLARGED FLOOR PLAN
A3.01	EXTERIOR ELEVATIONS
A3.02	SECTIONS
A3.03	SECTIONS
A4.01	ROOF PLAN
A5.01	INTERIOR ELEVATIONS
A5.02	INTERIOR ELEVATIONS
A6.01	REFLECTED CEILING PLAN
A7.01	EXTERIOR DETAILS
A7.02	EXTERIOR DETAILS
A7.03	EXTERIOR DETAILS
A7.04	EXTERIOR DETAILS
A8.01	INTERIOR DETAILS
A8.02	INTERIOR DETAILS
A8.03	INTERIOR DETAILS
A8.04	INTERIOR DETAILS
23 SHEETS	

SHT. NO.	DESCRIPTION
STRUCTURAL	
S0.01	PROJECT INFORMATION AND MATERIALS DATA
S0.02	TESTING AND SPECIAL INSPECTION
S1.01	TYPICAL DETAILS No. 1
S1.02	TYPICAL DETAILS No. 2
S1.03	TYPICAL DETAILS No. 3
S1.04	TYPICAL DETAILS No. 4
S1.05	TYPICAL DETAILS No. 5
S1.06	TYPICAL DETAILS No. 6
S1.07	TYPICAL DETAILS No. 7
S1.08	TYPICAL DETAILS No. 8
S2.01	FOUNDATION PLAN
S2.02	CEILING FRAMING PLAN
S2.03	ROOF FRAMING PLAN
S3.01	BUILDING SECTIONS No. 1
S3.02	BUILDING SECTIONS No. 2
S4.01	WALL ELEVATIONS No. 1
S4.02	WALL ELEVATIONS No. 2
S4.03	WALL ELEVATIONS No. 3
S4.04	WALL ELEVATIONS No. 4
S5.01	MOMENT FRAME ELEVATION
S6.01	FOUNDATION DETAILS
S6.02	ROOF FRAMING DETAILS
S6.03	ROOF FRAMING DETAILS No. 2
S6.04	CANOPY FRAMING DETAILS
24 SHEETS	
PLUMBING	
P0.1	PLUMBING GENERAL NOTES, LEGEND, AND SCHEDULES
P0.2	PLUMBING DETAILS
P1.0	PLUMBING FLOOR PLAN - WATER, GAS AND CONDENSATE
P1.1	PLUMBING FLOOR PLAN - WASTE AND VENT
P1.2	PLUMBING ROOF PLAN
5 SHEETS	
MECHANICAL	
M0.1	MECHANICAL GENERAL NOTES, LEGEND, AND SCHEDULES
M0.2	MECHANICAL DETAILS
M1.0	MECHANICAL FLOOR PLAN
M1.1	MECHANICAL ROOF PLAN
M2.0	MECHANICAL TITLE 24
M2.1	MECHANICAL TITLE 24
6 SHEETS	

SHT. NO.	DESCRIPTION
ELECTRICAL	
E0.01	CODES, NOTES SYMBOLS AND FIXTURE SCHED.
E0.02	INDOOR LIGHTING COMPLIANCE
E0.03	OUTDOOR LIGHTING COMPLIANCE
E0.04	POWER COMPLIANCE
E0.05	SOLAR AND BATTERY COMPLIANCE
E1.10	SITE ELECTRICAL PLAN - DEMOLITION
E1.11	SITE ELECTRICAL PLAN - DEMOLITION
E1.12	SITE ELECTRICAL PLAN - NEW
E1.13	PARTIAL SITE ELECTRICAL PLAN
E2.10	POWER PLAN AND ROOF ELECT. PLAN
E2.20	ROOF SOLAR PLANS
E2.21	SOLAR CUTSHEETS
E2.22	SOLAR NOTES
E2.23	SOLAR DETAILS
E3.10	LIGHTING PLANS
E3.11	LIGHTING CONTROL PLAN
E3.12	LIGHTING PLAN - LOBBY WALL ELEVATIONS
E4.10	FIRE ALARM PLANS
E5.01	FIRE ALARM SYSTEM EQUIP SPECS, CODES AND NOTES
E5.02	FIRE ALARM SYSTEM RISER DIAGRAM
E5.03	FIRE ALARM SYSTEM NOTES SCHED. AND DETAILS
E6.01	ONE LINE DIAGRAMS
E6.02	NEW ONE LINE DIAGRAMS
E6.03	PANEL SCHEDULES
E7.01	DETAILS
E7.02	DETAILS
E7.03	DETAILS
T1.10	SITE SIGNALS PLAN - DEMOLITION
T1.11	SITE SIGNALS PLAN - NEW
T2.10	SIGNALS PLAN
T3.10	SIGNALS DETAILS
31 SHEETS	
FIRE PROTECTION	
F1.01	HYDRAULIC REFERENCE SITE
F2.01	FIRE SPRINKLER PIPING PLAN
F3.01	FIRE SPRINKLER CEILING PLAN
F4.01	BUILDING SECTION
F5.01	DETAILS
F5.02	DETAILS
6 SHEETS	
101 TOTAL SHEETS	

SCOPE OF WORK

- NEW STUDENT SERVICES BUILDING

DEFERRED SUBMITTALS

- NONE

IDENTIFICATION STAMP
DIV. OF THE STATE ARCHITECT
APP: 02-123307 INC:
REVIEWED FOR
SS ☑ FLS ☑ ACS ☑
DATE: 10/15/2025

Owner:
WASHINGTON UNIFIED SCHOOL DISTRICT
7950 SOUTH ELM AVE.
FRESNO, CA 93706

Project Name:
STUDENT SERVICES

Project Address:
WASHINGTON UNION HIGH SCHOOL
6041 SOUTH ELM AVE.
FRESNO, CA 93706

integrated designs
by SOMAM, Inc.
ARCHITECTURE
ENGINEERING
INTERIOR DESIGN
6011 N. FRESNO STREET, SUITE 130
FRESNO CALIFORNIA 93710
P:(559) 436-0881 F:(559) 436-0887
E: design@somam.com
integrateddesigns.com

Ownership of Documents
This document, the ideas and designs incorporated herein, as an instrument of Professional Service is the property of Integrated Designs by SOMAM Inc. and is not to be used, in whole or in part for any other project without written authorization.
© COPYRIGHT 2024

Stamp:
LICENSED ARCHITECT — FELIPE CEBALLOS — No. C 12834 — 8-31-27 — STATE OF CALIFORNIA

Sheet Title:
TITLE SHEET

Job No.: **5613**

Sheet No.: **T1.00**

Release: DSA SUBMITTAL 04-02-25

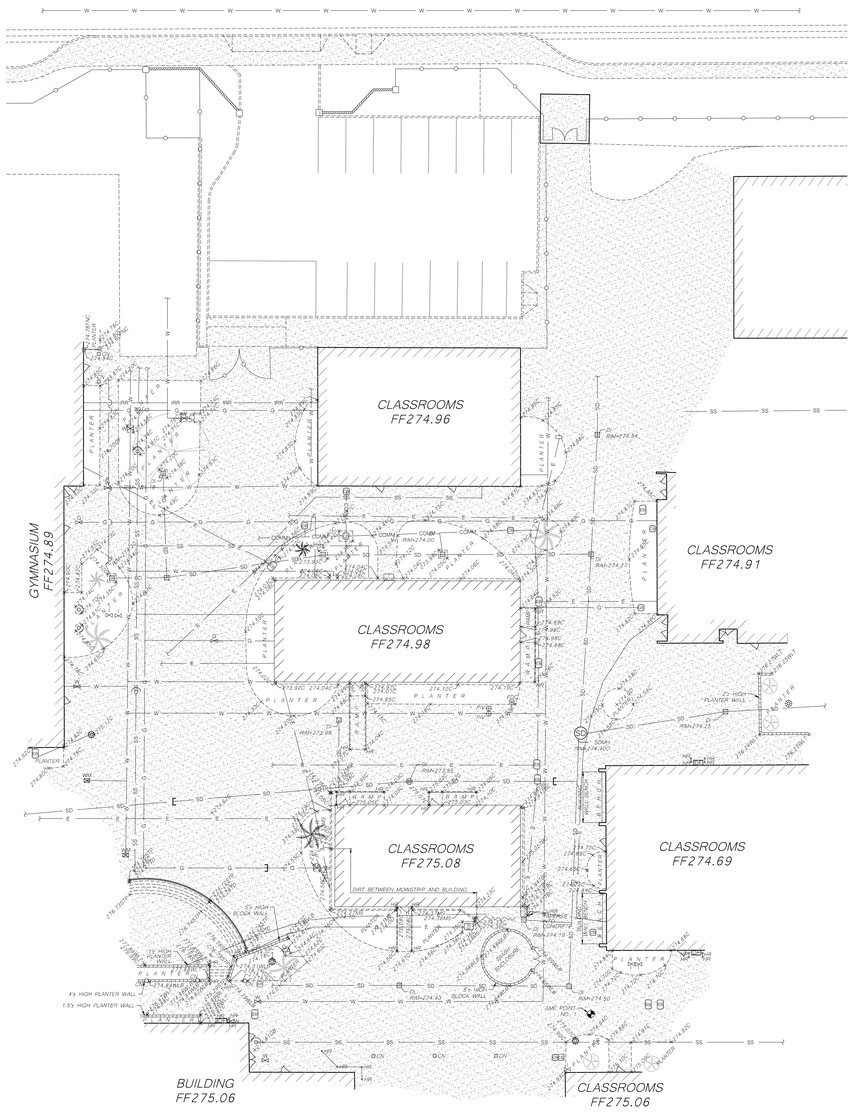

TOPOGRAPHIC LEGEND:

	BENCHMARK	C	CONCRETE
	COMMUNICATION BOX	CN	COLUMN
CCN	COLUMN (CIRCLE)	DI	DRAIN INLET
CCN	COLUMN (SQUARE)	D	DIRT
DF	DRINKING FOUNTAIN	ECAB	ELECTRICAL CABINET
	ELECTRICAL BOX	FDC	FIRE DEPARTMENT CONNECTION
FDC	FIRE DEPARTMENT CONNECTION	FF	FINISH FLOOR
	FIRE HYDRANT	FNC	FENCE - CHAIN LINK
	GAS BOX	HR	HANDRAIL
	GAS VALVE	MS	MOWSTRIP
HR	HANDRAIL	PIV	POST INDICATOR VALVE
	IRRIGATION CONTROL VALVE	RIM	RIM OF UTILITY STRUCTURE
	LIGHT - AREA	STP	STEPS
PIV	POST INDICATOR VALVE	TBC	TOP BACK OF CURB
	SEWER CLEANOUT	TD	TRENCH DRAIN
	STORM DRAIN MANHOLE	WLB	WALL, BLOCK
	STORM DRAIN INLET	WLT	TOP OF WALL
	TREE, TRUNK SIZE AS NOTED		
	WATER METER		
	WATER VALVE		
	CONCRETE		
	FENCE - CHAIN LINK		
	EXISTING BUILDING		
	EXISTING CONCRETE		
	FENCE - BLOCK		

NOTES:

1. THE TOPOGRAPHIC SURVEY WAS PERFORMED ON NOVEMBER 15, 2024.
2. THE TOPOGRAPHIC SURVEY IS ONLY A PARTIAL SURVEY OF THE SPECIFIC PHYSICAL FEATURES OF THE SITE AND THEIR ELEVATIONS. NOT ALL AREAS OF WORK WERE INCLUDED IN THE TOPOGRAPHIC SURVEY.
3. THE SURFACE FEATURES OF THE UTILITIES SHOWN WERE OBTAINED AT THE TIME OF THE TOPOGRAPHIC SURVEY AND FROM A UTILITY SEARCH OF PLANS PROVIDED BY THE OWNER. IT IS POSSIBLE THAT ADDITIONAL UTILITIES MAY BE PRESENT THAT WERE NOT REVEALED THROUGH THE UTILITY SEARCH. NO GUARANTEE CAN BE MADE ON THE ACCURACY OR COMPLETENESS OF THE UTILITIES SHOWN.
4. THE EXISTENCE AND LOCATION OF ALL IMPROVEMENTS, UTILITIES, STRUCTURES, BUILDINGS, PARTY WALLS, PARKING STALLS, EASEMENTS, SERVITUDES AND ENCROACHMENTS ARE BASED SOLELY ON ABOVE GROUND, VISIBLE EVIDENCE.

BENCHMARK:

NAD 83

STATION IS ABOUT 14.5 KM (9 MILES) SOUTH OF FRESNO AT THE NORTHWEST OUTSKIRTS OF FOWLER. FROM THE INTERSECTION OF CLOVIS AVE. AND HWY 99, ABOUT 1 MI NORTHWEST OF FOWLER, DRIVE SOUTH ON CLOVIS AVE. FOR 0.8 KM (0.5 MILES) TO THE INTERSECTION WITH ADAMS AVE. TURN LEFT AND GO EAST 0.6 KM (0.4 MILES) TO THE HWY 99 OVERPASS AND THE STATION ON THE RIGHT, OR FROM CLOVIS AVE, STAY ON HWY 99 FOR ABOUT 1 MI AND EXIT AT NEXT INTERSECTION, ADAMS AVE. TURN LEFT AND DRIVE EAST TO THE EAST END OF THE OVERPASS AND THE STATION ON THE RIGHT. LIKEWISE, FROM THE INTERSECTION OF GOLDEN STATE BLVD. AND ADAMS AVE. IN THE NW PART OF FOWLER, DRIVE WEST 0.5 KM (0.3 MILES) ON ADAMS TO JUST BEFORE THE BRIDGE OVER HWY 99 AND THE STATION ON THE LEFT. STATION IS LOCATED ON THE SOUTHEAST SIDE OF THE OVERPASS IN THE PEDESTRIAN WALKWAY, 5.9 M (19.5 FT) SOUTH OF THE CENTERLINE OF ADAMS, 5.0 M (16.5 FT) WEST OF THE EAST END OF THE PEDESTRIAN WALK, AND 1.2 M (3.9 FT) SOUTH OF THE NORTH FACE OF THE SOUTH CURB. MONUMENT IS A CSRC 3-INCH ALUMINUM DISK SET FLUSH IN THE CONCRETE SIDEWALK.

ELEVATION = 318.60'

SITE BENCHMARK:

AME POINT NO. 1

SET CHISELED "X" ON CONCRETE, 26'± SOUTHEAST OF CENTER OF DOUBLE GATE AT ROUND TRASH ENCLOSURE AND 21'± NORTHEAST OF NORTHWEST CORNER OF CLASSROOMS SOUTHEAST OF ROUND TRASH ENCLOSURE.

ELEVATION = 274.76'

1" = 50'-0" | 1" = 40'-0" | 1" = 30'-0" | 1" = 20'-0" | 1/8" = 1'-0" | 1/4" = 1'-0"

0 20' 40'

SCALE: 1" = 20'

IDENTIFICATION STAMP
DIV. OF THE STATE ARCHITECT
APP: 02-123307 INC:
REVIEWED FOR
SS ☑ FLS ☑ ACS ☑
DATE: 10/15/2025

Owner:

WASHINGTON UNIFIED SCHOOL DISTRICT

WASHINGTON UNIFIED SCHOOL DISTRICT
7950 S. ELM AVENUE
REEDLEY, CA 93654

Project Name:

STUDENT SERVICES

Project Address:

WASHINGTON UNION HIGH SCHOOL
6041 SOUTH ELM AVE.
FRESNO, CA. 93706

integrated designs
by SOMAM, Inc.

ARCHITECTURE
ENGINEERING
INTERIOR DESIGN

6011 N. FRESNO STREET, SUITE 130
FRESNO CALIFORNIA 93710
P:(559) 436-0881 F:(559) 436-0887
E: design@somam.com
integrateddesigns.com

Ownership of Documents
This document, the ideas and designs incorporated herein, as an instrument of Professional Service is the property of Integrated Designs by SOMAM Inc. and is not to be used, in whole or in part for any other project without written authorization.
© COPYRIGHT 2024

Stamp:

Sheet Title:

TOPOGRAPHIC SURVEY

Job No.: **5613**

Sheet No.: **C1**

Release: DSA SUBMITTAL 07-31-25

REGISTERED PROFESSIONAL ENGINEER
ALAN Y. MOK
No. 42618
EXP. 3/30/26
CIVIL
STATE OF CALIFORNIA

Alan Mok, PE, PLS, LEED AP
Principal
3433 W. SHAW AVENUE, SUITE #108
FRESNO, CALIFORNIA 93711
Tel: 559-432-6879
Fax: 559-432-6897
www.alanmokengineering.com

Alan Mok Engineering

P:\2025 PROJECTS\225-0112\DRAWINGS\PRODUCTION DRAWINGS\225-0112_TP.DWG
PLOT: 9/17/2025 11:14 AM BY SANLENG PHEN

1" = 50'-0" 1" = 40'-0" 1" = 30'-0" 1" = 20'-0" 1/8" = 1'-0" 1/4" = 1'-0"

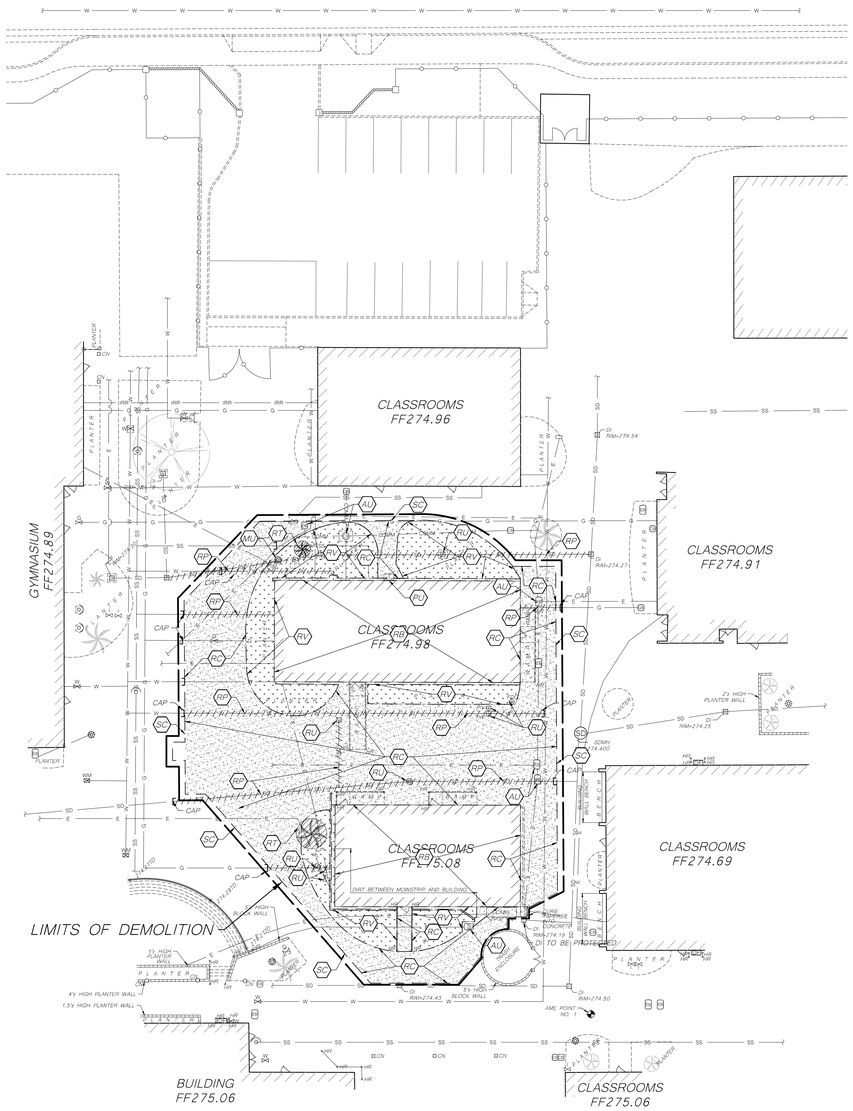

DEMOLITION LEGEND:

- AU — ADJUST EXISTING UTILITY BOXES, VAULTS AND MANHOLE COVERS AND FRAME TO MATCH ADJACENT FINISHED SURFACE GRADE. SEE GRADING PLAN
- ML — REMOVE EXISTING LIGHT POST.
- RB — REMOVE COMPLETE BUILDING, INCLUDING FOUNDATION AND CAP UTILITIES.
- RC — REMOVE EXISTING CONCRETE IMPROVEMENTS.
- RT — REMOVE TREE AND ROOTS.
- RU — REMOVE EXISTING MANHOLE, VALVES, INLETS, PIVS, AND FDC.
- RV — REMOVE VEGETATION, 4" MIN, ALSO REMOVE EXISTING IRRIGATION SYSTEM AND CAP.
- RP — REMOVE EXISTING UTILITIES PIPE.
- SC — SAWCUT

LIMITS OF DEMOLITION.

LIMITS OF UTILITIES PIPELINE REMOVAL.

LIMITS OF SAWCUT LINE.

LIMITS OF CONCRETE IMPROVEMENTS REMOVAL.

LIMITS OF VEGETATION REMOVAL.

DEMOLITION NOTES:

1. THE CONTRACTOR SHALL REVIEW ALL PLANS TO DETERMINE THE LOCATION AND LIMITS OF DEMOLITION.
2. THE CONTRACTOR SHALL PROTECT ALL EXISTING SITE IMPROVEMENTS, UTILITIES AND LANDSCAPE AREAS NOT SPECIFIED FOR DEMOLITION.
3. THE DEMOLITION LIMITS SHOWN ARE SCHEMATIC. THE CONTRACTOR SHALL DEMOLISH AS NECESSARY TO CONSTRUCT THE NEW IMPROVEMENTS SHOWN IN THESE PLANS.
4. THE LIMITS OF SAWCUT FOR EXISTING ASPHALT CONCRETE AND CONCRETE ARE SCHEMATIC. SAWCUT AND REMOVE AS NECESSARY TO CONSTRUCT NEW IMPROVEMENTS. THE SAWCUT IN EXISTING CONCRETE SHALL BE A THE SCORE LINE. REMOVE CONCRETE IN PANELS AT SCORE LINES OR AT THE EXPANSION JOINTS.
5. THE CONTRACTOR SHALL LEGALLY DISPOSE OF ALL MATERIALS SPECIFIED FOR DEMOLITION.
6. SEE ELECTRICAL AND MECHANICAL DRAWING FOR DEMOLITION AND PROTECTION PLAN OF EXISTING ELECTRICAL, COMMUNICATION AND GAS LINES.

NOTES:

1. THE ARCHITECT AND OWNER ACKNOWLEDGE THAT THE INFORMATION SHOWN REGARDING UTILITIES AND UNDERGROUND CONDITIONS ON THE DEMOLITION PLANS IS BASED ON A COMBINATION OF FIELD INVESTIGATIONS AND AVAILABLE RECORD DRAWINGS. GIVEN THAT THE SITE HAS BEEN CONTINUOUSLY OCCUPIED AND UNDER CONSTRUCTION FOR THE PAST 80 YEARS, IT IS HIGHLY LIKELY THAT UNKNOWN OR UNDOCUMENTED UNDERGROUND ITEMS REMAIN. WHILE EVERY EFFORT HAS BEEN MADE TO DEPICT KNOWN CONDITIONS ACCURATELY, THE CONTRACTOR SHALL EXERCISE EXTREME CAUTION DURING ALL EXCAVATION ACTIVITIES, PARTICULARLY DURING OVER EXCAVATION. THE POTENTIAL FOR ENCOUNTERING UNFORESEEN BURIED INFRASTRUCTURE OR MATERIALS IS SIGNIFICANT. THE CONTRACTOR IS RESPONSIBLE FOR IMPLEMENTING APPROPRIATE SAFETY MEASURES AND INVESTIGATIVE PROCEDURES TO MITIGATE RISKS ASSOCIATED WITH UNKNOWN UNDERGROUND CONDITIONS."

N

0 20' 40'

SCALE: 1" = 20'

IDENTIFICATION STAMP
DIV. OF THE STATE ARCHITECT
APP: 02-123307 INC:
REVIEWED FOR
SS ☑ FLS ☑ ACS ☑
DATE: 10/15/2025

Owner:

WASHINGTON UNIFIED SCHOOL DISTRICT

WASHINGTON UNIFIED SCHOOL DISTRICT
7950 S. ELM AVENUE
REEDLEY, CA 93654

Project Name:

STUDENT SERVICES

Project Address:

WASHINGTON UNION HIGH SCHOOL
6041 SOUTH ELM AVE.
FRESNO, CA. 93706

integrated designs
by SOMAM, Inc.

ARCHITECTURE ENGINEERING INTERIOR DESIGN

6011 N. FRESNO STREET, SUITE 130
FRESNO CALIFORNIA 93710
P:(559) 436-0881 F:(559) 436-0887
E: design@somam.com
integrateddesigns.com

Ownership of Documents
This document, the ideas and designs incorporated herein, as an instrument of Professional Service is the property of Integrated Designs by SOMAM Inc. and is not to be used, in whole or in part for any other project without written authorization.
© COPYRIGHT 2024

Stamp:

Sheet Title:

DEMOLITION PLAN

Job No.: **5613**

Sheet No.: **C2**

Release: DSA SUBMITTAL 07-31-25

REGISTERED PROFESSIONAL ENGINEER
ALAN K. MOK
No. 42618
EXP. 3/30/26
CIVIL
STATE OF CALIFORNIA

Alan Mok, PE, PLS, LEED AP
Principal
3433 W. SHAW AVENUE, SUITE #103
FRESNO, CALIFORNIA 93711
Tel. 559-432-6879
Fax. 559-432-6897
www.alanmokengineering.com

Alan Mok Engineering

P:\2025 PROJECTS\225-0112\DRAWINGS\PRODUCTION DRAWINGS\225-0112_DE.DWG
PLOT: 9/17/2025 11:15 AM BY SHALING PHEN

1" = 50'-0"
1" = 40'-0"
1" = 30'-0"
1" = 20'-0"
1/8" = 1'-0"
1/4" = 1'-0"

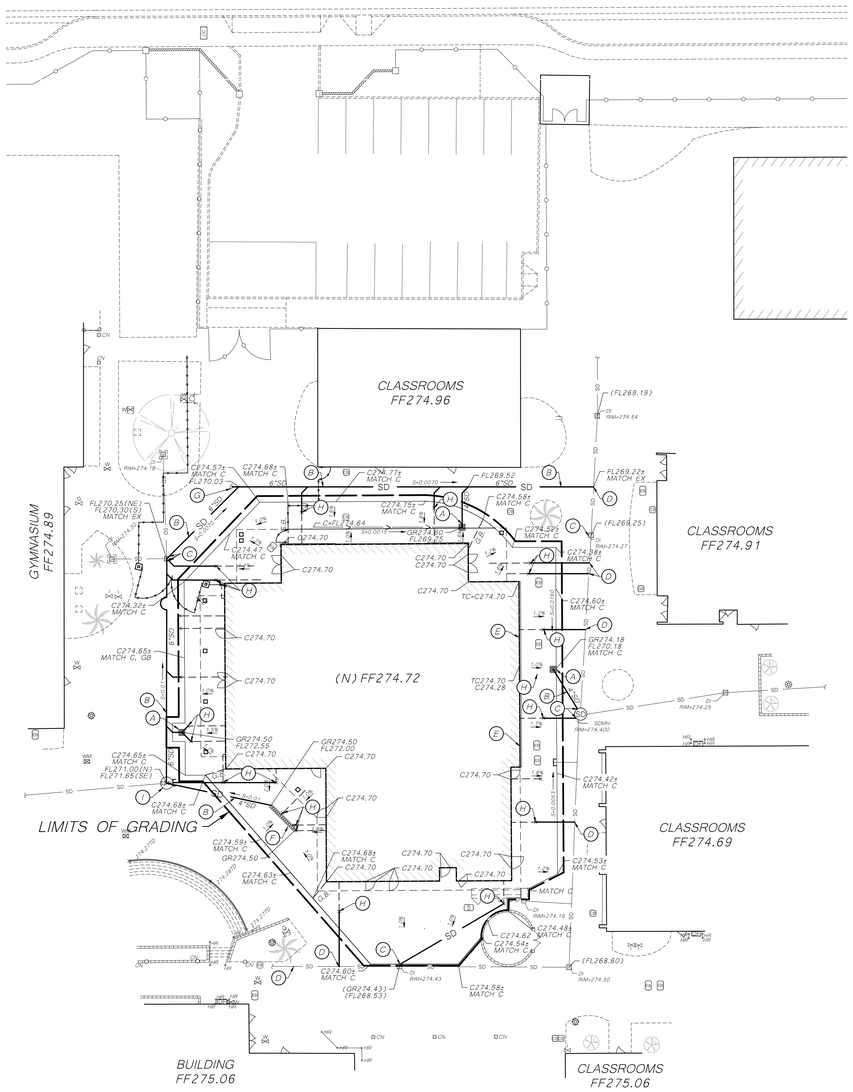

GRADING AND DRAINAGE LEGEND:

C	CONCRETE
FL	FLOWLINE OF PIPELINE
G.B.	GRADE BREAK
GR	GRATE
1.5%	FINISHED SURFACE SLOPE AND DIRECTION OF DRAINAGE
238.00	NEW FINISHED SURFACE GRADE
G.B.	GRADE BREAK
	LIMITS OF GRADING
SD 6"SD	NEW STORM DRAIN LINE; SIZE AS NOTED
	NEW STORM DRAIN INLET
SD	EXISTING STORM DRAIN LINE.
A	FURNISH AND INSTALL CHRISTY V-64 STORM DRAIN INLET PER DETAIL I/C5.
B	FURNISH AND INSTALL SDR-35 STORM DRAIN PIPELINE. BACKFILL PER DETAIL D/C5. SAWCUT, REMOVE, AND PLACE EXISTING CONCRETE AS NECESSARY FOR THE INSTALLATION OF STORM DRAIN.
C	MAKE CONCRETE COLLAR CONNECTION TO EXISTING MANHOLE OR INLET DETAIL C/C5.
D	MAKE CONCRETE COLLAR CONNECTION TO EXISTING STORM PIPE PER DETAIL C/C5.
E	FURNISH AND INSTALL CONCRETE CURB PER DETAIL L/C5.
F	FURNISH AND INSTALL TRENCH DRAIN PER DETAIL J/C5.
G	FURNISH AND INSTALL STORM DRAIN SURFACE CLEAN OUT PER DETAIL H/C5.
H	MAKE STORM DRAIN LINE CONNECTION TO THE ROOF DRAIN. REFER TO PLUMBING ROOF PLAN FOR CONTINUATION. PIPE SIZE PER PLUMBING ROOF PLAN.
I	FURNISH AND INSTALL STORM DRAIN MANHOLE PER DETAIL M/C5.

PARTIAL SITE, GRADING AND DRAINAGE NOTES:

1. THE "LIMITS OF GRADING" SHOWN ARE SCHEMATIC. THE CONTRACTOR SHALL CUT, FILL, BACKFILL, COMPACT, GRADE AND REGRADE AS NECESSARY TO PERFORM ALL NEW IMPROVEMENTS SHOWN ON THESE PLANS. AREAS BEYOND THE "LIMITS OF GRADING" DISTURBED BY THE ACTIVITIES OF THE CONTRACTOR AS PART OF THIS PROJECT SHALL BE REGRADED TO THE SATISFACTION OF THE OWNER.
2. THE CONTRACTOR SHALL ADJUST ALL NEW AND EXISTING UTILITY BOXES, VAULTS AND MANHOLE COVERS AND FRAME TO MATCH ADJACENT FINISHED SURFACE GRADE WITHIN THE "LIMITS OF GRADING", PER DETAIL F./C5., IF APPLICABLE.
3. THE LOCATION AND ALIGNMENT OF THE STORM DRAIN SYSTEM IS SCHEMATIC. ADJUSTMENTS ARE TO BE MADE IN THE FIELD DUE TO EXISTING UTILITIES AND NEW IMPROVEMENTS.
4. THE CONTRACTOR SHALL CONNECT THE ROOF DRAINS FOR THE NEW BUILDINGS TO THE NEW STORM DRAIN SYSTEM. FURNISH AND INSTALL ALL NECESSARY FITTINGS. PIPE SIZE TO MATCH DOWN SPOUTS.

FEMA FLOOD NOTE:

THE SITE IS IN FLOOD ZONE "X" PER FEMA FLOOD MAP 06019C2125H, EFFECTIVE ON 02/18/2009.

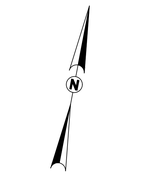

IDENTIFICATION STAMP
DIV. OF THE STATE ARCHITECT
APP: 02-123307 INC:
REVIEWED FOR
SS ☑ FLS ☑ ACS ☑
DATE: 10/15/2025

Owner:

WASHINGTON UNIFIED SCHOOL DISTRICT

7950 S. ELM AVENUE
REEDLEY, CA 93654

Project Name:

STUDENT SERVICES

Project Address:

WASHINGTON UNION HIGH SCHOOL

6041 SOUTH ELM AVE.
FRESNO, CA. 93706

integrated designs

by SOMAM, Inc.

ARCHITECTURE
ENGINEERING
INTERIOR DESIGN

6011 N. FRESNO STREET, SUITE 130
FRESNO CALIFORNIA 93710
P:(559) 436-0881 F:(559) 436-0887
E: design@somam.com
integrateddesigns.com

Ownership of Documents

This document, the ideas and designs incorporated herein, as an instrument of Professional Service is the property of Integrated Designs by SOMAM Inc. and is not to be used, in whole or in part for any other project without written authorization.

© COPYRIGHT 2024

Stamp:

Sheet Title:

GRADING AND DRAINAGE PLAN

Job No.:

5613

Sheet No.:

C3

Release: DSA SUBMITTAL 07-31-25

REGISTERED PROFESSIONAL ENGINEER
ALAN K. MOK
No. 42618
EXP. 3/31/26
CIVIL
STATE OF CALIFORNIA

Alan Mok, PE, PLS, LEED AP
Principal
3433 W. SHAW AVENUE, SUITE #106
FRESNO, CALIFORNIA 93711
Tel: 559-432-6870
Fax: 559-432-6897
www.alanmokengineering.com

Alan Mok Engineering

P:\2025 PROJECTS\225-0112\DRAWINGS\PRODUCTION DRAWINGS\225-0112_GR.DWG
PLOT: 9/17/2025 11:16 AM BY SANLENG PHEN

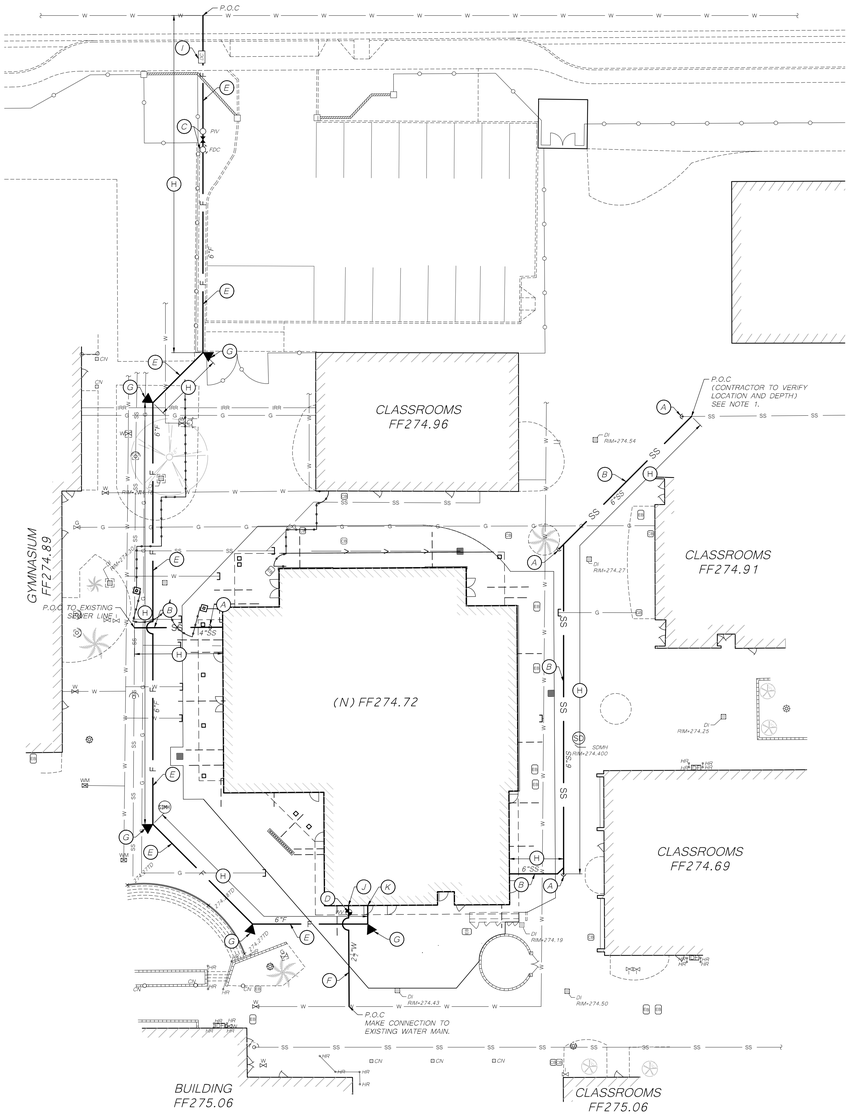

SEWER AND WATER LEGEND:

- (A) FURNISH AND INSTALL SEWER SURFACE CLEANOUT PER DETAIL H/C5.
- (B) FURNISH AND INSTALL PVC SDR-35 SEWER LINE. BACKFILL TRENCH PER DETAIL D/C5.
- (C) FURNISH AND INSTALL FDC AND PIV WITH 6" SWING CHECK VALVE PER DETAIL E/C5.
- (D) FURNISH AND INSTALL WATER GATE VALVE PER DETAIL B/C5.
- (E) FURNISH AND INSTALL PVC, C900, CLASS 305 FIRE WATER LINE. BACKFILL TRENCH PER DETAIL D/C5.
- (F) FURNISH AND INSTALL PVC, SCH 40 WATER LINE. BACKFILL TRENCH PER DETAIL D/C5.
- (G) CONSTRUCT THRUST BLOCK PER DETAIL G/C5.
- (H) SAWCUT, REMOVE AND REPLACE EXISTING IMPROVEMENT AS NECESSARY FOR THE INSTALLATION OF THE UTILITIES.
- (I) FURNISH AND INSTALL DETECTOR CHECK VALVE PER CITY OF FRESNO, STD. W-16.
- (J) MAKE A WATER CONNECTION TO THE BUILDING. CONTRACTOR TO PROVIDE ALL NECESSARY FITTINGS.
- (K) MAKE A FIRELINE CONNECTION TO THE BUILDING. CONTRACTOR TO PROVIDE ALL NECESSARY FITTINGS.

- F — 6"F — NEW FIRE WATER PIPELINE. SIZE AS NOTED.
- W — 2"W — NEW DOMESTIC WATER PIPELINE. SIZE AS NOTED.
- SS — 6"SS @=S=0.0100 — NEW SEWER PIPELINE, SIZE AS NOTED. PIPE FLOWLINE SLOPE AND DIRECTION OF FLOW AS NOTED.
- SD — 4"SD — NEW STORM DRAINAGE PIPELINE. SEE GRADING AND DRAINAGE PLAN.
- NEW SURFACE CLEANOUT
- PIV — NEW POST INDICATOR VALVE.
- FDC — NEW FIRE DEPARTMENT CONNECTION.
- WM — NEW WATER METER
- WV — NEW WATER VALVE.
- THRUST BLOCK
- DC — NEW DETECTOR CHECK VALVE.
- P.O.C — POINT OF CONNECTION, CONTRACTOR SHALL MAKE WET TIE TO EXISTING WATER SYSTEM

SEWER AND WATER NOTES:

1. AS A FIRST ORDER OF WORK, CONTRACTOR TO POTHOLE AS NECESSARY TO LOCATE THE EXISTING UTILITY. PROVIDE TO THE DESIGN ENGINEER THE HORIZONTAL AND VERTICAL LOCATION AND SIZE. ALLOW THE ENGINEER SUFFICIENT TIME TO REVIEW INFORMATION AND MAKE ANY NECESSARY ADJUSTMENTS TO THE HORIZONTAL ALIGNMENT, VERTICAL DEPTH AND PIPE SIZE. CONTRACTOR IS NOT TO PROCEED UNTIL AUTHORIZED BY THE DESIGN ENGINEER.
2. FOR ALL OFF-SITE WORK, THE CONTRACTOR SHALL OBTAIN AND PAY FOR ALL NECESSARY COUNTY OF FRESNO PERMIT(S) AND PERMIT FEE(S).
3. WATER OBTAINED FROM ANY OFF-SITE FIRE HYDRANTS ARE SUBJECTED TO ALL COUNTY OF FRESNO WATER USE FEES.

0 20' 40'

SCALE: 1" = 20'

IDENTIFICATION STAMP
DIV. OF THE STATE ARCHITECT
APP: 02-123307 INC:
REVIEWED FOR
SS ☑ FLS ☑ ACS ☑
DATE: 10/15/2025

Owner:

WASHINGTON UNIFIED SCHOOL DISTRICT

WASHINGTON UNIFIED SCHOOL DISTRICT
7950 S. ELM AVENUE
REEDLEY, CA 93654

Project Name:

STUDENT SERVICES

Project Address:

WASHINGTON UNION HIGH SCHOOL
6041 SOUTH ELM AVE.
FRESNO, CA. 93706

integrated designs
by SOMAM, Inc.

ARCHITECTURE
ENGINEERING
INTERIOR DESIGN

6011 N. FRESNO STREET, SUITE 130
FRESNO CALIFORNIA 93710
P:(559) 436-0881 F:(559) 436-0887
E: design@somam.com
integrateddesigns.com

Ownership of Documents

This document, the ideas and designs incorporated herein, as an instrument of Professional Service is the property of Integrated Designs by SOMAM Inc. and is not to be used, in whole or in part for any other project without written authorization.

© COPYRIGHT 2024

Stamp:

Sheet Title:

UTILITY PLAN

Job No.: **5613**

Sheet No.: **C4**

Release: DSA SUBMITTAL 07-31-25

REGISTERED PROFESSIONAL ENGINEER
ALAN K. MOK
No. 42618
EXP. 3/31/26
CIVIL
STATE OF CALIFORNIA

Alan Mok, PE, PLS,
LEED AP
Principal

3433 W. SHAW AVENUE, SUITE #106
FRESNO, CALIFORNIA 93711
Tel 559-432-8579
Fax 559 432-8897
www.alanmokengineering.com

Alan Mok Engineering

P:\2025 PROJECTS\225-0112\DRAWINGS\PRODUCTION DRAWINGS\225-0112_UT.DWG
PLOT: 9/17/2025 11:16 AM BY SANLENG PHEN

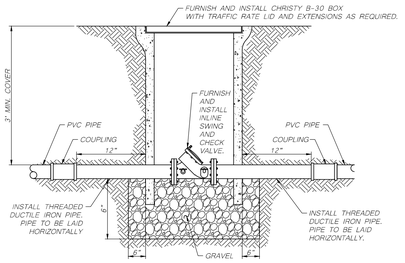

A CHECK VALVE
NOT TO SCALE

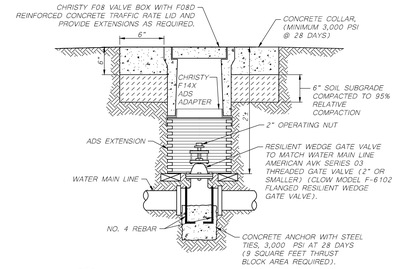

B GATE VALVE AND LID
NOT TO SCALE

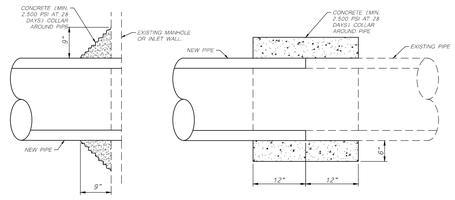

C CONCRETE COLLAR
NOT TO SCALE

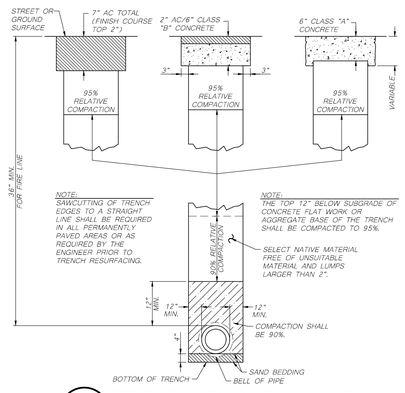

D TRENCH BACKFILL AND SURFACE REPLACEMENT
NOT TO SCALE

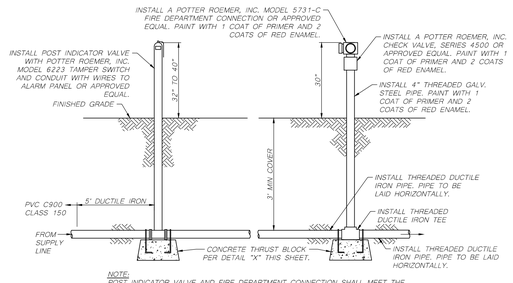

NOTE:
POST INDICATOR VALVE AND FIRE DEPARTMENT CONNECTION SHALL MEET THE CITY OF FRESNO, FIRE DEPARTMENT STANDARDS.

E POST INDICATOR VALVE AND FIRE DEPARTMENT CONNECTION
NOT TO SCALE

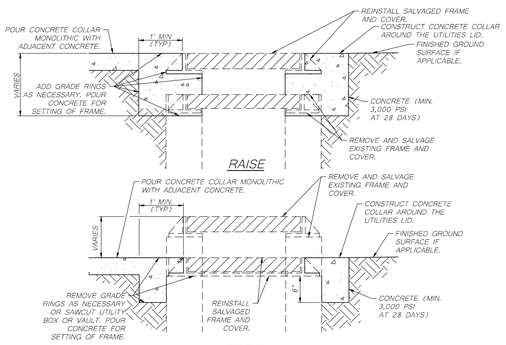

LOWER

F ADJUST UTILITY LID
NOT TO SCALE

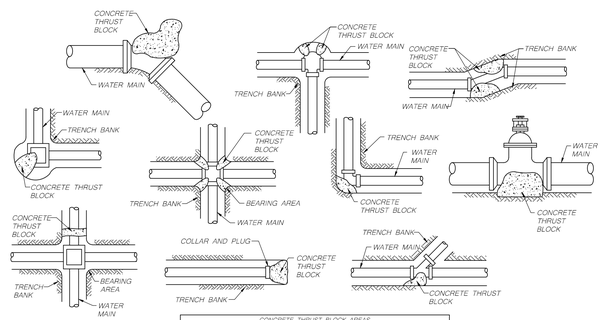

CONCRETE THRUST BLOCK AREAS REQUIRED (IN SQUARE FEET)

	4"	6"	8"	10"	12	14	16"
Cross, Tee, Valve, Plug, Fire Hydrant	3.6	7.5	12.9	19.4	27.4	30.3	39.2
90° Bend	5.1	10.6	18.2	24.4	38.7	42.9	55.5
45° Bend	2.8	5.7	9.8	14.8	20.9	23.2	30.0
22 1/2° Bend	2.0	2.9	5.0	7.8	10.7	11.8	15.3
11 1/4° Bend	2.0	2.0	2.5	3.8	5.4	5.9	7.7
End	3.6	7.5	12.9	19.4	27.4	30.3	39.2

BASED ON 1500 PSF SOIL BEARING CAPACITY

CONCRETE: MINIMUM 3,000 PSI AT 28 DAYS

G CONCRETE THRUST BLOCKS
NOT TO SCALE

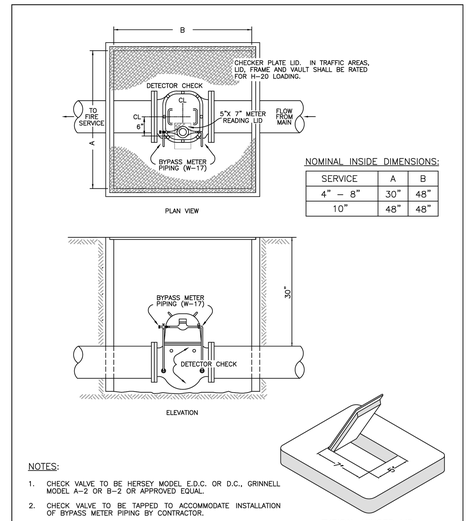

NOMINAL INSIDE DIMENSIONS:

SERVICE	A	B
4" – 8"	30"	48"
10"	48"	48"

NOTES:

1. CHECK VALVE TO BE HERSEY MODEL E.D.C. OR D.C., GRINNELL MODEL A-2 OR B-2 OR APPROVED EQUAL.
2. CHECK VALVE TO BE TAPPED TO ACCOMMODATE INSTALLATION OF BYPASS METER PIPING BY CONTRACTOR.
3. VAULT OR BOX TO BE CHRISTY, BROOKS OR APPROVED EQUAL.
4. VAULT OR BOX, DETECTOR CHECK VALVE AND COVER TO BE INSTALLED BY DEVELOPER'S CONTRACTOR PER FRESNO MUNICIPAL CODE, SECTION 14, SUBSECTIONS 131-137 INCL. SEE W-17 FOR DETAILS.
5. VAULT OR BOX COVER TO HAVE 5" X 7" HINGED METER READ LID.

FIRE SERVICE DETECTOR CHECK INSTALLATION	REF. & REV. ~~AUG. 2002~~ MAR. 2021 (A.7)	CITY OF FRESNO W-16

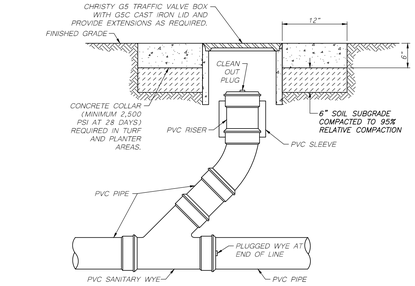

H SURFACE CLEANOUT AND TRAFFIC LID
NOT TO SCALE

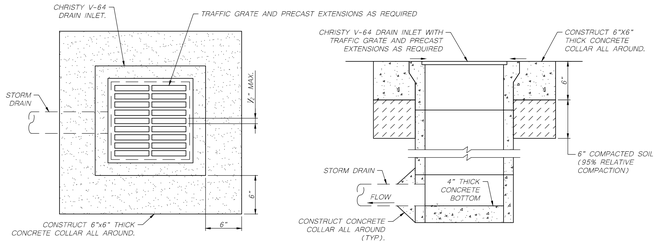

I CHRISTY V-64 INLET
NOT TO SCALE

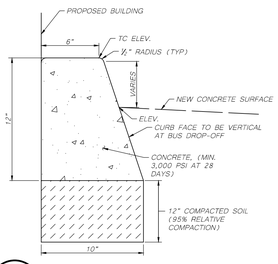

L CONCRETE CURB
NOT TO SCALE

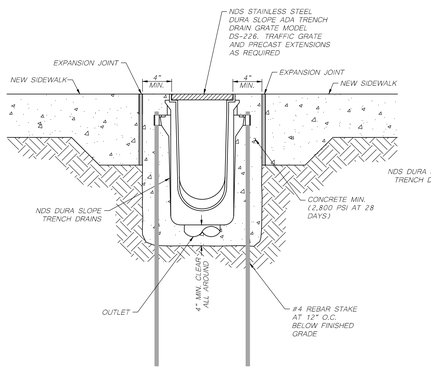

FRONT VIEW

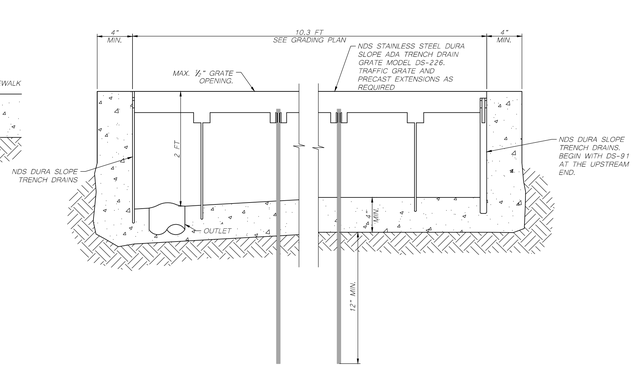

SIDE VIEW

J TRENCH DRAIN
NOT TO SCALE

K NOT USED
NOT TO SCALE

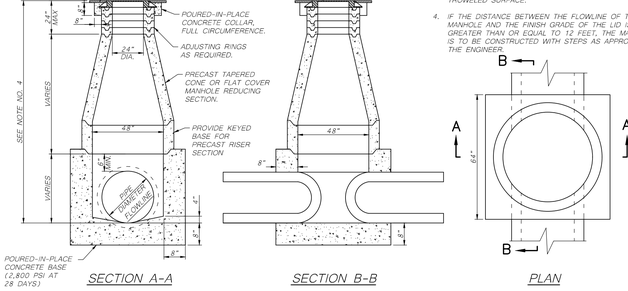

SECTION A-A SECTION B-B PLAN

NOTE
1. PRECAST PIPE, ADJUSTING RINGS AND TAPERED SECTIONS SHALL BE CONSTRUCTED IN ACCORDANCE WITH A.S.T.M. C-478, USING TYPE 2 CEMENT.
2. ALL JOINTS BETWEEN PRECAST SECTIONS SHALL BE MORTARED.
3. INTERIOR OF THE MANHOLE SHALL HAVE A SMOOTH TROWELED SURFACE.
4. IF THE DISTANCE BETWEEN THE FLOWLINE OF THE MANHOLE AND THE FINISH GRADE OF THE LID IS GREATER THAN OR EQUAL TO 12 FEET, THE MANHOLE IS TO BE CONSTRUCTED WITH STEPS AS APPROVED BY THE ENGINEER.

M STORM DRAIN MANHOLE STRUCTURE
NOT TO SCALE

IDENTIFICATION STAMP
DIV. OF THE STATE ARCHITECT
APP: 02-123307 INC:
REVIEWED FOR
SS ☑ FLS ☑ ACS ☑
DATE: 10/15/2025

Owner:
WASHINGTON UNIFIED SCHOOL DISTRICT

WASHINGTON UNIFIED SCHOOL DISTRICT
7950 S. ELM AVENUE
REEDLEY, CA 93654

Project Name:
STUDENT SERVICES

Project Address:
WASHINGTON UNION HIGH SCHOOL
6041 SOUTH ELM AVE.
FRESNO, CA. 93706

integrated designs
by SOMAM, Inc.

ARCHITECTURE ENGINEERING INTERIOR DESIGN

6011 N. FRESNO STREET, SUITE 130
FRESNO CALIFORNIA 93710
P:(559) 436-0881 F:(559) 436-0887
E: design@somam.com
integrateddesigns.com

Ownership of Documents
This document, the ideas and designs incorporated herein, as an instrument of Professional Service is the property of Integrated Designs by SOMAM Inc. and is not to be used, in whole or in part for any other project without written authorization.
© COPYRIGHT 2024

Stamp:

Sheet Title:
DETAILS

Job No.: **5613**

Sheet No.: **C5**

Release: DSA SUBMITTAL 07-31-25

REGISTERED PROFESSIONAL ENGINEER ALAN K. MOK No. 42618 EXP. 3/31/26 CIVIL STATE OF CALIFORNIA
Alan Mok, PE, PLS, LEED AP
Principal
3433 W. SHAW AVENUE, SUITE #106
FRESNO, CALIFORNIA 93711
Tel: 559-432-6870
Fax: 559-432-6887
www.alanmokengineering.com
Alan Mok Engineering

P:\2025 PROJECTS\225-0112\DRAWINGS\PRODUCTION DRAWINGS\225-0112_DT.DWG
PLOT: 9/17/2025 11:16 AM BY DAILING PHEN

MATERIAL AND FINISH SCHEDULE

Room No.	ROOM NAME	FLOOR		BASE			WAINSCOT			WALLS								CEILING			REMARKS
										NORTH		EAST		SOUTH		WEST					
		MAT	FIN	MAT	FIN	HT	MAT	FIN	HT	MAT	FIN	MAT	FIN	MAT	FIN	MAT	FIN	MAT	FIN	HT	
101	LOBBY	CONC	SEAL	RTB	FF	4"	-	-	-	PL/SS	FF/FF	GB	P12B	-	-	GB	P12B	GB/ACT	P12B/FF	11'-0"/VARIES	SEE NOTE No.8
102	RECEPTION	C	FF	RTB	FF	4"	-	-	-	-	-	GB	P12B	GB	P12B	GB	P12B	GB/ACT	P12B/FF	11'-0"	
103	ADMIN	C	FF	RTB	FF	4"	-	-	-	-	-	-	-	GB	P12B	GB	P12B	ACT	FF	9'-0"	
104	ADMIN	C	FF	RTB	FF	4"	-	-	-	-	-	GB	P12B	GB	P12B	-	-	ACT	FF	9'-0"	
105	HALL	CONC	SEAL	RTB	FF	4"	-	-	-	-	-	-	-	GB	P12B	-	-	ACT	FF	9'-0"	
106	NURSE	C	FF	RTB	FF	4"	-	-	-	TB	FF	TB	FF	TB	FF	TB	FF	ACT	FF	8'-0"	
107	TOILET ROOM	CONC	SEAL	CONC	SEAL	6"	CT	-	4'-0"	CT/GB	FF/P12B	CT/GB	FF/P12B	CT/GB	FF/P12B	CT/GB	FF/P12B	GB	P12B	8'-0"	
108	TOILET ROOM	CONC	SEAL	CONC	SEAL	6"	CT	-	4'-0"	CT/GB	FF/P12B	CT/GB	FF/P12B	CT/GB	FF/P12B	CT/GB	FF/P12B	GB	P12B	8'-0"	
109	WORKING ROOM	CONC	SEAL	RTB	FF	4"	-	-	-	GB	P12B	GB	P12B	GB	P12B	GB	P12B	ACT	FF	8'-0"	
110	ARCHIVE STORAGE	CONC	SEAL	RTB	FF	4"	-	-	-	GB	P12B	GB	P12B	GB	P12B	GB	P12B	GB	P12B	8'-0"	
111	PAPER STORAGE	CONC	SEAL	RTB	FF	4"	-	-	-	GB	P12B	GB	P12B	GB	P12B	GB	P12B	ACT	FF	8'-0"	
112	OFFICE	C	FF	RTB	FF	4"	-	-	-	TB	FF	TB	FF	TB	FF	TB	FF	ACT	FF	8'-0"	
113	OFFICE	C	FF	RTB	FF	4"	-	-	-	TB	FF	TB	FF	TB	FF	TB	FF	ACT	FF	8'-0"	
114	OFFICE	C	FF	RTB	FF	4"	-	-	-	TB	FF	TB	FF	TB	FF	TB	FF	ACT	FF	8'-0"	
115	OFFICE	C	FF	RTB	FF	4"	-	-	-	TB	FF	TB	FF	TB	FF	TB	FF	ACT	FF	8'-0"	
116	OFFICE	C	FF	RTB	FF	4"	-	-	-	TB	FF	TB	FF	TB	FF	TB	FF	ACT	FF	8'-0"	
117	OFFICE	C	FF	RTB	FF	4"	-	-	-	TB	FF	TB	FF	TB	FF	TB	FF	ACT	FF	8'-0"	
118	OFFICE	C	FF	RTB	FF	4"	-	-	-	TB	FF	TB	FF	TB	FF	TB	FF	ACT	FF	8'-0"	
119	WAITING AREA	CONC	SEAL	RTB	FF	4"	-	-	-	GB	P12B	GB	P12B	GB	P12B	GB	P12B	GB/ACT	P12B/FF	9'-0"/VARIES	
120	WAITING AREA	CONC	SEAL	RTB	FF	4"	-	-	-	GB	P12B	GB	P12B	GB	P12B	GB	P12B	GB/ACT	P12B/FF	9'-0"/VARIES	
121	OFFICE	C	FF	RTB	FF	4"	-	-	-	TB	FF	TB	FF	TB	FF	TB	FF	ACT	FF	8'-0"	
122	OFFICE	C	FF	RTB	FF	4"	-	-	-	TB	FF	TB	FF	TB	FF	TB	FF	ACT	FF	8'-0"	
123	OFFICE	C	FF	RTB	FF	4"	-	-	-	TB	FF	TB	FF	TB	FF	TB	FF	ACT	FF	8'-0"	
124	OFFICE	C	FF	RTB	FF	4"	-	-	-	TB	FF	TB	FF	TB	FF	TB	FF	ACT	FF	8'-0"	
125	OFFICE	C	FF	RTB	FF	4"	-	-	-	TB	FF	TB	FF	TB	FF	TB	FF	ACT	FF	8'-0"	
126	OFFICE	C	FF	RTB	FF	4"	-	-	-	TB	FF	TB	FF	TB	FF	TB	FF	ACT	FF	8'-0"	
127	DIRECTOR	C	FF	RTB	FF	4"	-	-	-	TB	FF	TB	FF	TB	FF	TB	FF	ACT	FF	8'-0"	
128	HALL	CONC	SEAL	RTB	FF	4"	-	-	-	-	-	GB	P12B	GB	P12B	GB	P12B	ACT	FF	9'-0"	
129	CONFERENCE	C	FF	RTB	FF	4"	-	-	-	TB	FF	TB	FF	TB	FF	TB	FF	ACT	FF	9'-0"	
130	CONFERENCE	C	FF	RTB	FF	4"	-	-	-	TB	FF	TB	FF	TB	FF	TB	FF	ACT	FF	9'-0"	
131	HALL	CONC	SEAL	RTB	FF	4"	-	-	-	-	-	GB	P12B	GB	P12B	GB	P12B	ACT	FF	9'-0"	
132	DIRECTOR	C	FF	RTB	FF	4"	-	-	-	TB	FF	TB	FF	TB	FF	TB	FF	ACT	FF	8'-0"	
133	HALL	CONC	SEAL	RTB	FF	4"	-	-	-	GB	P12B	-	-	GB	P12B	GB	P12B	ACT	FF	9'-0"	
134	MAIL PICK-UP	CONC	SEAL	RTB	FF	4"	-	-	-	GB	P12B	GB	P12B	GB	P12B	GB	P12B	ACT	FF	9'-0"	
135	BOOK STORAGE	CONC	SEAL	RTB	FF	4"	-	-	-	GB	P12B	GB	P12B	GB	P12B	GB	P12B	GB	P12B	8'-0"	
136	CAMPUS POLICE	C	FF	RTB	FF	4"	-	-	-	TB	FF	TB	FF	TB	FF	TB	FF	ACT	FF	8'-0"	
137	TOILET ROOM	CONC	SEAL	CONC	SEAL	6"	CT	-	4'-0"	CT/GB	FF/P12B	CT/GB	FF/P12B	CT/GB	FF/P12B	CT/GB	FF/P12B	GB	P12B	8'-0"	
138	HALL	CONC	SEAL	RTB	FF	4"	-	-	-	GB	P12B	GB	P12B	GB	P12B	GB	P12B	ACT	FF	9'-0"	
139	OFFICE	C	FF	RTB	FF	4"	-	-	-	TB	FF	TB	FF	TB	FF	TB	FF	ACT	FF	8'-0"	
140	OFFICE	C	FF	RTB	FF	4"	-	-	-	TB	FF	TB	FF	TB	FF	TB	FF	ACT	FF	8'-0"	
141	FIRE SPRINKLER RISER	CONC	SEAL	CONC	SEAL	6"	-	-	-	GB	P12B	GB	P12B	GB	P12B	GB	P12B	GB	P12B	8'-0"	
142	STAFF LOUNGE	CONC	SEAL	RTB	FF	4"	-	-	-	GB	P12B	GB	P12B	GB	P12B	GB	P12B	ACT	FF	9'-0"	
143	HALL	CONC	SEAL	RTB	FF	4"	-	-	-	GB	P12B	GB	P12B	GB	P12B	GB	P12B	ACT	FF	9'-0"	
144	JANITOR CLOSET	CONC	SEAL	CONC	SEAL	6"	-	-	-	GB	P12B	FRP/GB	FF/P12B	FRP/GB	FF/P12B	FRP/GB	FF/P12B	GB	P12B	8'-0"	
145	TOILET ROOM	CONC	SEAL	CONC	SEAL	6"	CT	-	4'-0"	CT/GB	FF/P12B	CT/GB	FF/P12B	CT/GB	FF/P12B	CT/GB	FF/P12B	GB	P12B	8'-0"	
146	ELECT ROOM	CONC	SEAL	CONC	SEAL	6"	-	-	-	GB	P12B	GB	P12B	GB	P12B	GB	P12B	GB	P12B	8'-0"	
147	NOT USED			-	-	-	-	-	-	-	-	-	-	-	-	-	-	-	-	-	
148	NOT USED																				
149	WATER HEATER ROOM	CONC	SEAL	CONC	SEAL	6"	-	-	-	GB	P12B	GB	P12B	GB	P12B	GB	P12B	GB	P12B	8'-0"	

DOOR SCHEDULE

XXX ON PLAN

DOOR SCHEDULE

DOOR NO.	TYPE NO	DOOR OPENING SIZE	DOOR				FRAME		GLASS	LOUVER	U/L	HARDWARE	DETAILS			SIGNAGE	SIGNAGE	ILLUMINATED
			THK	MAT	CORE	FIN.	MAT	FIN	SIZE	SIZE	RAT'G	NO.	HEAD	JAMB	THRESHOLD	A8.01	A7.01	EXIT SIGN
101A	FG	PR 3'-0" x 7'-0"	1 3/4"	HM	GLASS	P56C	HM	FF	1" INSL	-	-	1	21/A7.01	24/A7.01	23/A7.01	22, 19	-	YES
101B	FG	PR 3'-0" x 7'-0"	1 3/4"	HM	GLASS	P56C	HM	FF	1" INSL	-	-	1	21/A7.01	24/A7.01	23/A7.01	22, 19	-	YES
102	H	3'-0" x 3'-1 1/2"	1 3/4"	WD	SC	FF	-	-	-	-	-	12	-	-	-	-	-	
105	F	3'-0" x 7'-0"	1 3/4"	WD	SC	FF	HM	P14B	-	-	-	3	2/A8.02	3/A8.02	4/A8.02	-	-	-
107	F	3'-0" x 7'-0"	1 3/4"	WD	SC	FF	HM	P14B	-	-	-	2	2/A8.02	3/A8.02	4/A8.02	2	-	-
110	F	3'-0" x 7'-0"	1 3/4"	WD	SC	FF	HM	P14B	-	-	45 MIN	4	2/A8.02	3/A8.02	4/A8.02	-	-	-
111	F	3'-0" x 7'-0"	1 3/4"	WD	SC	FF	HM	P14B	-	-	-	3	2/A8.02	3/A8.02	4/A8.02	19	-	-
119A	N	3'-0" x 7'-0"	1 3/4"	WD	SC	FF	HM	P14B	36" x 6"	-	-	5	2/A8.02	3/A8.02	4/A8.02	19	-	-
119B	N	3'-0" x 7'-0"	1 3/4"	WD	SC	FF	HM	P14B	36" x 6"	-	-	5	2/A8.02	3/A8.02	4/A8.02	19	-	-
119C	N	3'-0" x 7'-0"	1 3/4"	WD	SC	FF	HM	P14B	36" x 6"	-	-	5	2/A8.02	3/A8.02	4/A8.02	19	-	-
119D	N	3'-0" x 7'-0"	1 3/4"	WD	SC	FF	HM	P14B	36" x 6"	-	-	5	2/A8.02	3/A8.02	4/A8.02	19	-	-
119E	N	3'-0" x 7'-0"	1 3/4"	WD	SC	FF	HM	P14B	36" x 6"	-	-	5	2/A8.02	3/A8.02	4/A8.02	19	-	-
119F	N	3'-0" x 7'-0"	1 3/4"	WD	SC	FF	HM	P14B	36" x 6"	-	-	5	2/A8.02	3/A8.02	4/A8.02	19	-	-
119G	N	3'-0" x 7'-0"	1 3/4"	WD	SC	FF	HM	P14B	36" x 6"	-	-	5	2/A8.02	3/A8.02	4/A8.02	19	-	-
119H	N	3'-0" x 7'-0"	1 3/4"	WD	SC	FF	HM	P14B	36" x 6"	-	-	5	2/A8.02	3/A8.02	4/A8.02	19	-	-
119I	N	3'-0" x 7'-0"	1 3/4"	WD	SC	FF	HM	P14B	36" x 6"	-	-	5	2/A8.02	3/A8.02	4/A8.02	19	-	-
120	F	3'-0" x 7'-0"	1 3/4"	WD	SC	FF	HM	P14B	-	-	-	3	2/A8.02	3/A8.02	4/A8.02	19	-	-
127	F	3'-0" x 7'-0"	1 3/4"	HM	INSL	P56C	HM	P56C	-	-	-	9	11/A7.01	12/A7.01	13/A7.01	19	-	-
128A	F	3'-0" x 7'-0"	1 3/4"	WD	SC	FF	HM	P14B	-	-	-	5	2/A8.02	3/A8.02	4/A8.02	19	-	-
128B	F	3'-0" x 7'-0"	1 3/4"	WD	SC	FF	HM	P14B	-	-	-	2	2/A8.02	3/A8.02	4/A8.02	2	-	-
128C	F	3'-0" x 7'-0"	1 3/4"	HM	INSL	P56C	HM	P56C	-	-	-	11	11/A7.01	12/A7.01	13/A7.01	22, 19	-	YES
128D	N	3'-0" x 7'-0"	1 3/4"	WD	SC	FF	HM	P14B	36" x 6"	-	-	5	2/A8.02	3/A8.02	4/A8.02	19	-	-
128E	F	2'-8" x 7'-0"	1 3/4"	WD	SC	FF	HM	P14B				7	2/A8.02	3/A8.02	4/A8.02	19		
131A	N	3'-0" x 7'-0"	1 3/4"	WD	SC	FF	HM	P14B	36" x 6"	-	-	5	2/A8.02	3/A8.02	4/A8.02	19	-	-
131B	N	3'-0" x 7'-0"	1 3/4"	WD	SC	FF	HM	P14B	36" x 6"	-	-	5	2/A8.02	3/A8.02	4/A8.02	19	-	-
131C	N	3'-0" x 7'-0"	1 3/4"	WD	SC	FF	HM	P14B	36" x 6"	-	-	5	2/A8.02	3/A8.02	4/A8.02	19	-	-
132	F	3'-0" x 7'-0"	1 3/4"	HM	INSL	P56C	HM	P56C	-	-	-	9	11/A7.01	12/A7.01	13/A7.01	19	-	-
133A	N	3'-0" x 7'-0"	1 3/4"	WD	SC	FF	HM	P14B	36" x 6"	-	-	5	2/A8.02	3/A8.02	4/A8.02	19	-	-
133B	N	3'-0" x 7'-0"	1 3/4"	WD	SC	FF	HM	P14B	36" x 6"	-	-	5	2/A8.02	3/A8.02	4/A8.02	19	-	-
133C	N	3'-0" x 7'-0"	1 3/4"	WD	SC	FF	HM	P14B	36" x 6"	-	-	5	2/A8.02	3/A8.02	4/A8.02	19	-	-
133D	FG	3'-0" x 7'-0"	1 3/4"	HM	INSL	P56C	HM	FF	-	-	-	11	11/A7.01	12/A7.01	13/A7.01	22, 19	-	YES
134A	F	3'-0" x 7'-0"	1 3/4"	HM	INSL	P56C	HM	P56C	-	-	-	11	11/A7.01	12/A7.01	13/A7.01	22, 19	-	YES
134B	F	3'-0" x 7'-0"	1 3/4"	WD	SC	FF	HM	P14B	-	-	-	2	2/A8.02	3/A8.02	4/A8.02	2	-	-
135	N	PR 3'-0" x 7'-0"	1 3/4"	HM	INSL	P56C	HM	P56C	-	-	-	10	11/A7.01	12/A7.01	13/A7.01	19	-	-
138A	F	3'-0" x 7'-0"	1 3/4"	WD	SC	FF	HM	P14B	-	-	-	3	2/A8.02	3/A8.02	4/A8.02	19	-	-
138B	N	3'-0" x 7'-0"	1 3/4"	WD	SC	FF	HM	P14B	36" x 6"	-	-	5	2/A8.02	3/A8.02	4/A8.02	19	-	-
138C	N	3'-0" x 7'-0"	1 3/4"	WD	SC	FF	HM	P14B	36" x 6"	-	-	5	2/A8.02	3/A8.02	4/A8.02	19	-	-
138D	N	3'-0" x 7'-0"	1 3/4"	WD	SC	FF	HM	P14B	36" x 6"	-	-	10	2/A8.02	3/A8.02	4/A8.02	19	-	-
138E	N	3'-0" x 7'-0"	1 3/4"	WD	SC	FF	HM	P14B	36" x 6"	-	-	5	2/A8.02	3/A8.02	4/A8.02	19	-	-
138F	F	3'-0" x 7'-0"	1 3/4"	WD	SC	FF	HM	P14B	-	-	-	2	2/A8.02	3/A8.02	4/A8.02	2	-	-
141	F	3'-0" x 7'-0"	1 3/4"	HM	INSL	P56C	HM	P56C	-	-	-	4	11/A7.01	12/A7.01	13/A7.01	-	-	-
142	F	3'-0" x 7'-0"	1 3/4"	HM	INSL	P56C	HM	P56C	-	-	-	9	11/A7.01	12/A7.01	13/A7.01	19	-	-
143A	N	3'-0" x 7'-0"	1 3/4"	WD	SC	FF	HM	P14B	36" x 6"	-	-	5	2/A8.02	3/A8.02	4/A8.02	19	-	-
143B	N	3'-0" x 7'-0"	1 3/4"	WD	SC	FF	HM	P14B	36" x 6"	-	-	5	2/A8.02	3/A8.02	4/A8.02	19	-	-
146	F	4'-0" x 7'-10"	2 3/4"	HM	INSL	P56C	HM	P56C	-	-	-	6	11/A7.01	12/A7.02	13/A7.02	19	-	-
149	F	3'-0" x 7'-0"	1 3/4"	HM	INSL	P56C	HM	P56C	-	-	-	6	11/A7.01	12/A7.01	13/A7.01	19	-	-

ABBREVIATIONS

ACT	= SUSPENDED ACOUSTICAL PANEL CEILING	PC	= POLISHED CONCRETE
C	= CARPET	RTB	= RUBBER TOPSET BASE
CONC	= CONCRETE	SEAL	= SEALED CONCRETE
CT	= CERAMIC TILE	SS	= SOUND SOAKING PANEL
FF	= FACTORY FINISH	TB	= TACKABLE WALL BOARD
FRP	= FIBERGLASS REINFORCED PANELS	AW	= ADOBE WALL
GB	= GYPSUM BOARD	CW	= CMU WALL
P	= PAINT SYSTEM – SEE SPECIFICATIONS	EC	= EXPOSED CEILING
PL	= PLASTIC LAMINATE PANEL	*	SEE SPECIFICATIONS

NOTES

1. ALL FLOOR PLAN ROOM NAMES AND NUMBERS ARE FOR CONSTRUCTION INFORMATION ONLY. THE CONTRACTOR SHALL COORDINATE ACTUAL ROOM NAMES & NUMBERS WITH THE OWNER AND ARCHITECT PRIOR TO ORDERING ANY ROOM SIGNAGE.
2. SEE SPECIFICATIONS FOR ADDITIONAL FINISH MATERIAL INFORMATION.
3. REFER TO FLOOR PLANS FOR ADDITIONAL INFORMATION.
4. FLOOR AND GROUND SURFACES SHALL BE STABLE, FIRM AND SLIP RESISTANT AS PER CBC 11B–302.1
5. ALL GLAZING TO COMPLY WITH CBC 2406.3
6. GYP BOARD TEXTURE TO BE GB–7 ORANGE PEEL LIGHT.
7. HOLLOW METAL FRAMES FOR DOORS AND WINDOWS SHALL BE ATTACHED PER 5 & 10/A7.01
8. LOBBY HIGHEST SLOPPING CEILING WITH MECHANICALLY ATTACHED 2'X4' TECTUM PANELS. SEE DETAIL 4.40/A8.03.

DOOR TYPES

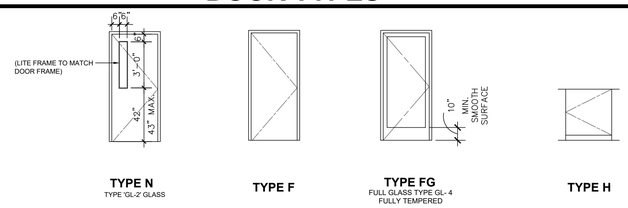

TYPE N TYPE 'GL-2' GLASS

TYPE F

TYPE FG FULL GLASS TYPE GL- 4 FULLY TEMPERED

TYPE H

WINDOW TYPES

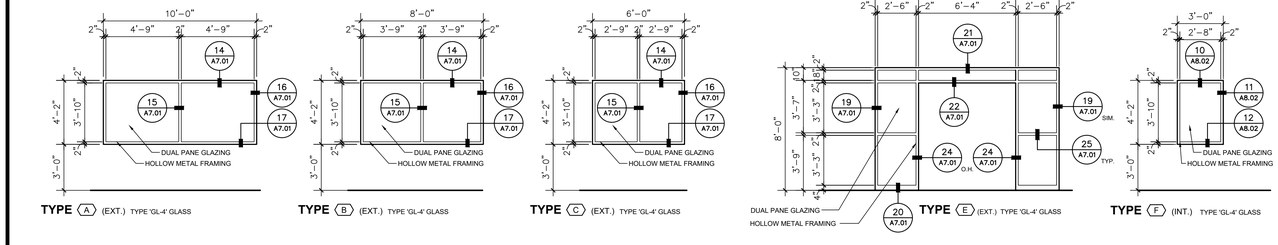

TYPE A (EXT.) TYPE 'GL-4' GLASS

TYPE B (EXT.) TYPE 'GL-4' GLASS

TYPE C (EXT.) TYPE 'GL-4' GLASS

TYPE E (EXT.) TYPE 'GL-4' GLASS

TYPE F (INT.) TYPE 'GL-4' GLASS

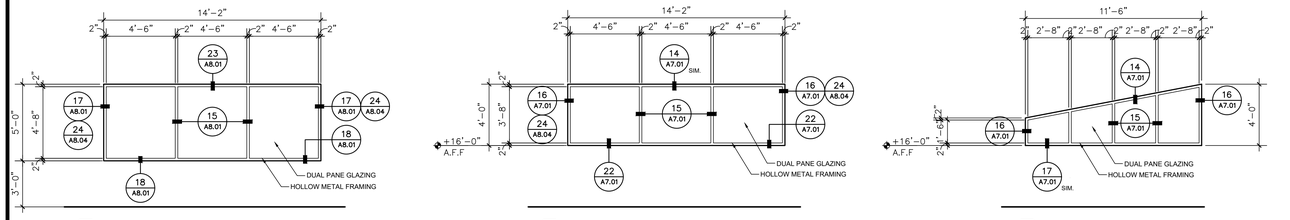

TYPE G (EXT.) TYPE 'GL-4' GLASS

TYPE H (EXT.) TYPE 'GL-4' GLASS

TYPE I (EXT.) TYPE 'GL-4' GLASS

ABBREVIATIONS

FF	FACTORY FINISH
HM	HOLLOW METAL
INSUL	INSULATED
L	LAMINATED
P	PAINT (SEE SPECS)
PR	PAIR
SC	SOLID CORE
WD	WOOD

ACCESSIBILITY NOTE

A. THE MAXIMUM EFFORT TO OPERATE EXTERIOR DOORS SHALL NOT EXCEED 5 POUNDS. CBC 11B–404.2.9 AT ACCESSIBLE ENTRANCES

B. CBC 1010.2.8.2 – NEW BUILDINGS ON A K–12 PUBLIC SCHOOL CAMPUS SHALL BE PROVIDED WITH LOCKS WHICH ALLOW DOORS TO CLASSROOMS AND ANY ROOM WITH AN OCCUPANT LOAD OF FIVE OR MORE PERSONS TO BE LOCKED FROM THE INSIDE. LOCKS SHALL CONFORM TO THE SPECIFICATION AND REQUIREMENTS OF SECTION 1010.2 EXCEPTIONS INCLUDE DOORS WHICH ARE NORMALLY LOCKED FROM THE OUTSIDE, RELOCATABLE MOVED WITHIN THE SAME CAMPUS, AND RECONSTRUCTION PROJECTS.

C. DOOR CLOSERS AND GATE CLOSERS SHALL BE ADJUSTED SO THAT FROM AN OPEN POSITION OF 90 DEGREES, THE TIME REQUIRED TO MOVE THAT DOOR TO A POSITION OF 12 DEGREES FROM LATCH IS 5 SECONDS MINIMUM 11B–404.2.8

WINDOW SCHEDULE

XXX ON PLAN

WINDOW SCHEDULE

TYPE	FRAME SIZE WIDTH x HEIGHT	FRAME		GLASS	FIRE	DETAILS						REMARKS
						VENEER		CEMENT PLASTER				
		MAT	FIN	TYPE	RAT'G	JAMB	SILL	HEAD	JAMB	SILL	MULLION	
A	10'-0" x 4'-0"	HM	P55C	1" INSUL	-		17/A7.01	14/A7.01	16/A7.01		15/A7.01	
B	8'-0" x 4'-0"	HM	P55C	1" INSUL	-		17/A7.01	14/A7.01	16/A7.01		15/A7.01	
C	6'-0" x 4'-0"	HM	P55C	1" INSUL	-		17/A7.01	14/A7.01	16/A7.01		15/A7.01	
D					-							
E	12'-0" x 8'-0"	HM	P55C	1" INSUL	-	7/A7.01		21/A7.01	19/A7.01	20/A7.01	25/A7.01	
F	3'-0" x 4'-0"	HM	P55C	1" INSUL	-			10/A8.02	11/A8.02	12/A8.02		
G	14'-2" x 5'-0"	HM	P55C	1" INSUL	-	7/A7.01	17/A7.01	14/A7.01	16/A7.01		15/A7.01	
H	14'-2" x 4'-0"	HM	P55C	1" INSUL	-			14/A7.01	16/A7.01	18/A7.01	15/A7.01	
I	11'-6" x 4'-0"	HM	P55C	1" INSUL	-			14/A7.01	16/A7.01	18/A7.01	15/A7.01	

IDENTIFICATION STAMP
DIV. OF THE STATE ARCHITECT
APP: 02-123307 INC:
REVIEWED FOR
SS ☑ FLS ☑ ACS ☑
DATE: 10/15/2025

Owner:

WASHINGTON UNIFIED SCHOOL DISTRICT
7950 SOUTH ELM AVE.
FRESNO, CA 93706

Project Name:

STUDENT SERVICES

Project Address:

WASHINGTON UNION HIGH SCHOOL
6041 SOUTH ELM AVE.
FRESNO, CA 93706

integrated designs
by SOMAM, Inc.

ARCHITECTURE ENGINEERING INTERIOR DESIGN

6011 N. FRESNO STREET, SUITE 130
FRESNO CALIFORNIA 93710
P:(559) 436-0881 F:(559) 436-0887
E: design@somam.com
integrateddesigns.com

Ownership of Documents
This document, the ideas and designs incorporated herein, as an instrument of Professional Service is the property of Integrated Designs by SOMAM Inc. and is not to be used, in whole or in part for any other project without written authorization.

© COPYRIGHT 2024

Stamp:

LICENSED ARCHITECT FELIPE CEBALLOS No. C 12834 8-31-25 STATE OF CALIFORNIA

Sheet Title:

SCHEDULES

Job No.: **5613**

Sheet No.: **A0.01**

Release: DSA SUBMITTAL 04-02-25

9/22/25

G:\2023\frs\23-5613 WASHINGTON UNION HIGH SCHOOL - STUDENT SERVICES\Sheets\5613-A0.01 SCHEDULES.dwg FRANK AYALA

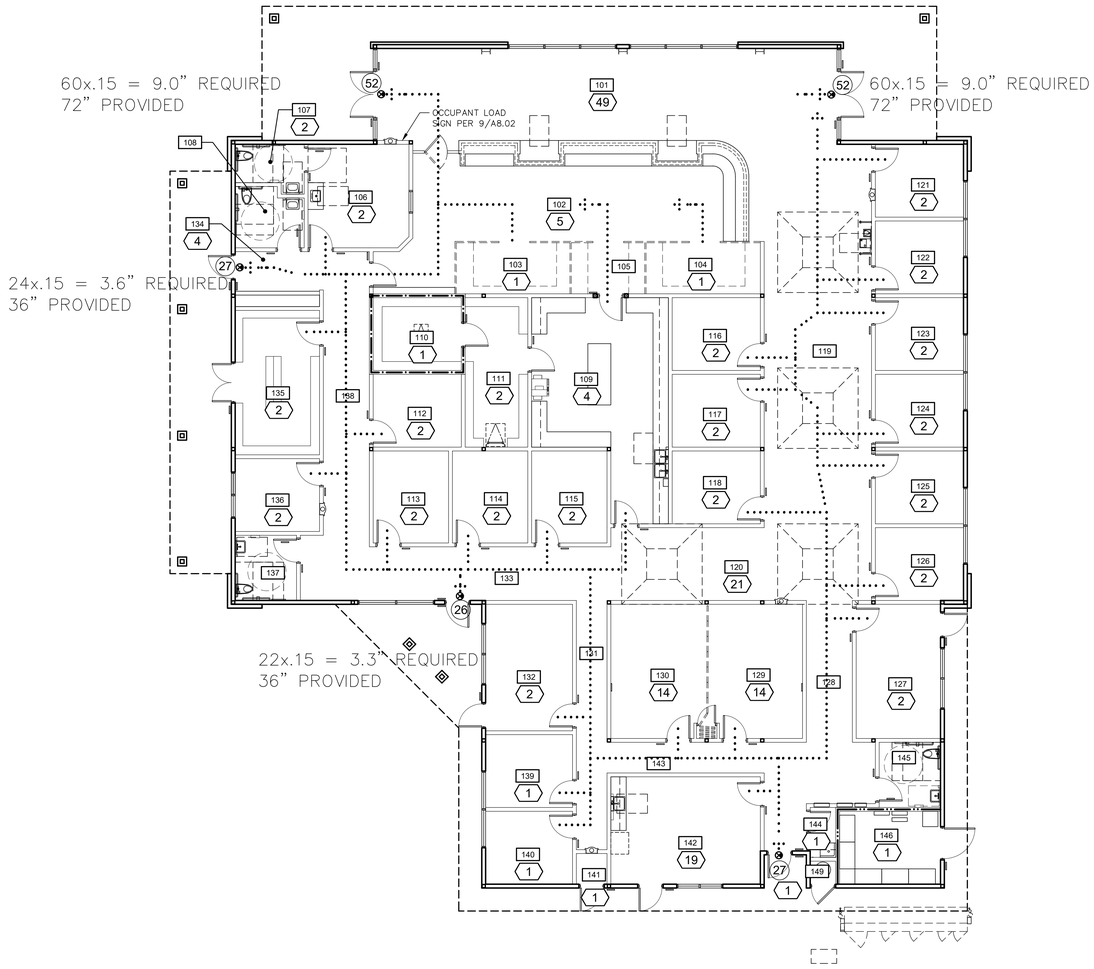

CODE ANALYSIS

STUDENT SERVICES

SCALE: 1/8"=1'-0"

BUILDING CODE WORKSHEET	
Project Name:	WASHINGTON UNION HIGH SCHOOL STUDENT SERVICES
Project	5613 5613
Date	03-24-2025

BUILDING DATA	
Name	STUDENT SERVICES BUILDING
Use	STUDENT SERVICES BUILDING
Occupancy	B
Construction Type	VB
Allowable Height (Story)	3 STORY (60 FEET)
Allowable Area	36,000 S.F.
Floor Area	8,813 S.F.
Overhead Area	1,687 S.F.
Actual Total Area	10,500 S.F.
Actual Height	26'-0"
Automatic Fire Sprinkler System	YES

BUILDING OCCUPANT LOAD (CBC 1004.5)

Room Number and Description		Room Net Area (S.F.)	Occupant Load Factor	Number of Occupants
101	LOBBY	734	15	49
102	CIVIC ADMINISTRATION	802	150	5
103	ADMIN	94	150	1
104	ADMIN	94	150	1
105	HALL	56		
106	NURSE	177	150	2
107	TOILET ROOM	50		
108	TOILET ROOM	67		
109	WORKING ROOM	419	100	4
110	ARCHIVE STORAGE	109	300	1
111	PAPER STORAGE	159	300	2
112	OFFICE	109	150	2
113	OFFICE	118	150	2
114	OFFICE	124	150	2
115	OFFICE	124	150	2
116	OFFICE	109	150	2
117	OFFICE	109	150	2
118	OFFICE	109	150	2
119	HALL	521		
120	HALL	321		
121	OFFICE	109	150	2
122	OFFICE	109	150	2
123	OFFICE	109	150	2
124	OFFICE	109	150	2
125	OFFICE	109	150	2
126	OFFICE	109	150	2
127	DIRECTOR	193	150	2
128	HALL	189		
129	CONFERENCE	219	15	14
130	CONFERENCE	219	15	14
131	HALL	130		
132	DIRECTOR	187	150	2
133	HALL	296		
134	MAIL PICK-UP	78	20	4
135	BOOK STORAGE	207	300	1
136	CAMPUS POLICE	104	150	1
137	TOILET ROOM	68		
138	HALL	226		
139	OFFICE	108	150	2
140	OFFICE	108	150	2
141	FIRE SPRINKLER RISER	16	300	1
142	STAFF LOUNGE	273	15	19
143	HALL	157		
144	JANITOR	18	300	1
145	TOILET ROOM	69		
146	ELECT. ROOM	133	300	1
147	NOT USED			
148	NOT USED			0
149	WATER HEATER RM	9	300	1
	TOTAL S.F.	8066		156

EXITS REQUIRED PER TABLE 1006.3.3	2
EXITS PROVIDED	5
MAX. TRAVEL DISTANCE	100 FT.

LEGEND

- (#) ROOM OCCUPANT LOAD
- (#) OCCUPANTS EXITING
- [#] ROOM NUMBER
- • • • DIRECTION OF EXITING
- EMERGENCY EXIT LIGHT. SEE ELECTRICAL DRAWINGS FOR TYPE AND MOUNTING.

IDENTIFICATION STAMP
DIV. OF THE STATE ARCHITECT
APP: 02-123307 INC:
REVIEWED FOR
SS ☑ FLS ☑ ACS ☑
DATE: 10/15/2025

Owner:
WASHINGTON UNIFIED SCHOOL DISTRICT

WASHINGTON UNIFIED SCHOOL DISTRICT
7950 SOUTH ELM AVE.
FRESNO, CA 93706

Project Name:
STUDENT SERVICES

Project Address:
WASHINGTON UNION HIGH SCHOOL
6041 SOUTH ELM AVE.
FRESNO, CA 93706

integrated designs
by SOMAM, Inc.

ARCHITECTURE ENGINEERING INTERIOR DESIGN

6011 N. FRESNO STREET, SUITE 130
FRESNO CALIFORNIA 93710
P:(559) 436-0881 F:(559) 436-0887
E: design@somam.com
integrateddesigns.com

Ownership of Documents
This document, the ideas and designs incorporated herein, as an instrument of Professional Service is the property of Integrated Designs by SOMAM Inc. and is not to be used, in whole or in part for any other project without written authorization.
© COPYRIGHT 2024

Stamp:
LICENSED ARCHITECT FELIPE CEBALLOS No. C 12834 REN. 8-31-25 STATE OF CALIFORNIA

Sheet Title:
CODE ANALYSIS

Job No.:
5613

Sheet No.:
A0.10

Release: DSA SUBMITTAL 04-02-25

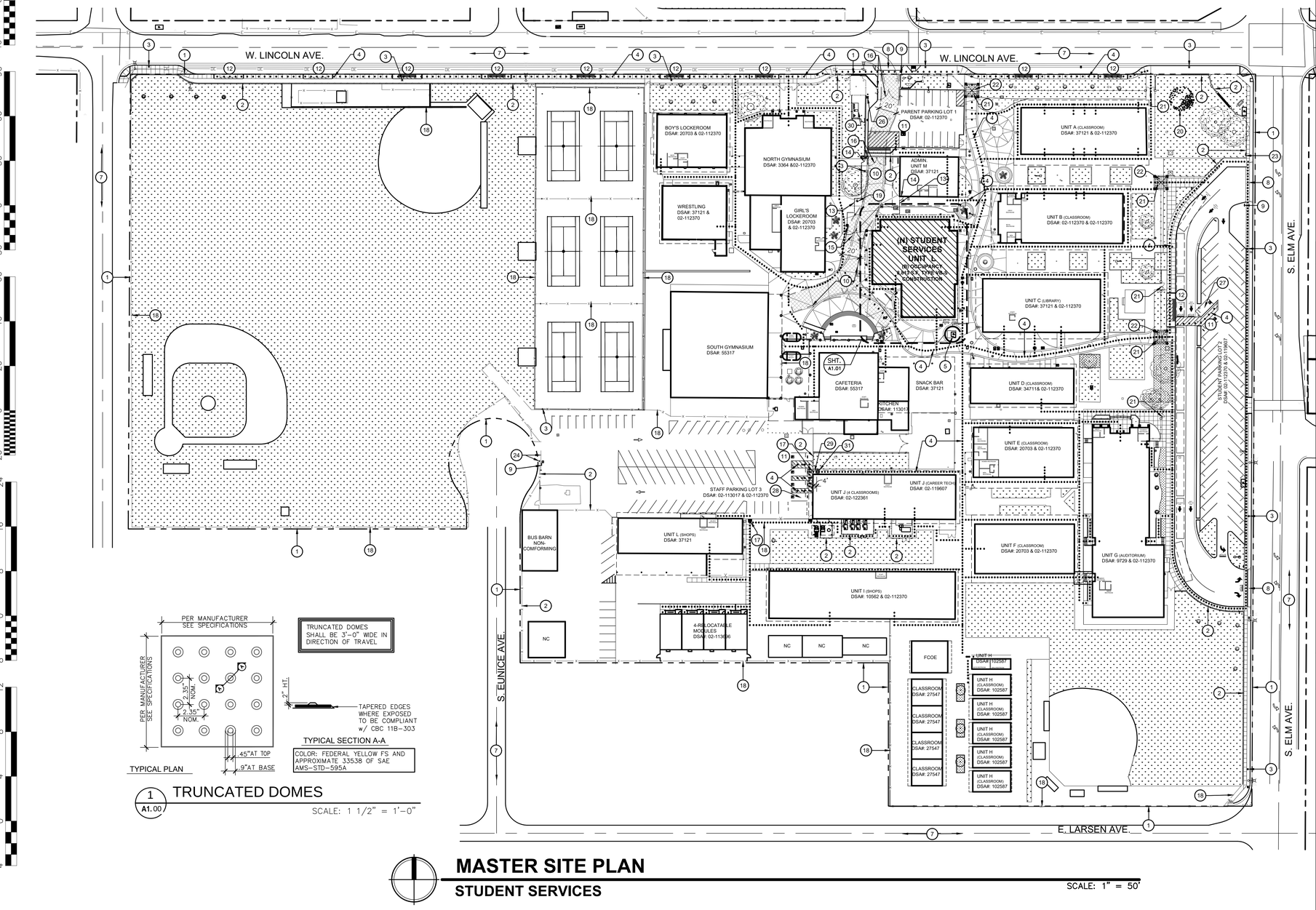

1 A1.00 TRUNCATED DOMES

SCALE: 1 1/2" = 1'-0"

MASTER SITE PLAN

STUDENT SERVICES

SCALE: 1" = 50'

1" = 50'-0" 0 50 100 150
1" = 40'-0" 0 40 80 120
1" = 30'-0" 0 30 60 90
1" = 20'-0" 0 20 40 60
1/8" = 1'-0" 0 8 16 24
1/4" = 1'-0" 0 4 8 12

CAL FIRE

FRESNO COUNTY FIRE

PROTECTION DISTRICT

210 South Academy Avenue
Sanger, California 93657
Telephone: (559) 493-4339
Fax: (559) 875-7431
www.fresnocountyfire.org

WATER FLOW REQUEST

This form is to be used by fire sprinkler contractors to request the water flow for the project location specified. Complete Section 1 and send to Fresno County Fire Protection District. This form, with both Sections 1 and 2 completed, must be submitted to Fresno County Fire Protection District with the fire sprinkler plans.

SECTION 1

REPORT DATE:	COMPANY ASSESSING FLOW INFORMATION:		
2/12/2025	INTEGRATED DESIGNS		
COMPANY ADDRESS: 6011 N. Fresno St Suite 130		CITY: Fresno	STATE: CA
COMPANY PHONE NUMBER: 559-436-0881	FAX NUMBER: 559-436-0887		
CONTACT PERSON: Efrain Gaeta		EMAIL: (Contact Person) egaeta@somam.com	
PROJECT NAME: WUHS – Student Services		PROJECT LOCATION: Washington Union High School	
STREET WHERE WATER SERVICE WILL BE OBTAINED FROM: Washington Union High School (On Campus)			

Do not write below this line – To be completed by Fresno County Fire Protection District

SECTION 2

LOCATION OF TESTED HYDRANT: Washington Union High School (On Campus)		
DATE HYDRANT FLOWED: 2/13/2025	TIME HYDRANT FLOWED: 1530	HYDRANT NUMBER (if ID): N/A
STATID: 54 PSI	RESIDUAL: 45 PSI	PITOT: 35 PSI
FLOW: 2035 GPM @ 20 PSI	COMMENTS:	

INFORMATION SENT BY: ☐ Fax ☐ Phone ☐ Mail • E-Mail By: John Blalock Date: 2/18/2025.

Revision: 3/2015

DSA 810
FIRE & LIFE SAFETY SITE CONDITIONS SUBMITTAL

	CONDITION MEANS AND METHODS RESOLUTION	ALTERNATE ACCEPTED Yes	No	N/A	N/R
4.	Emergency vehicle access roadways do not meet CFC requirements.			✓	
4a.	**Acceptable Alternate:** Emergency vehicle and personnel access as proposed by the project architect is acceptable for providing fire suppression and protection of life and property.				
5.	**Fire Hydrants:** Number and spacing does not meet CFC requirements..			✓	
5a.	**Acceptable Alternate:** Number of fire hydrants and spacing as proposed by the project architect is acceptable for fire suppression and protection of life and property.				
6.	**Fire Hydrants:** Water flow and pressure are less than CFC minimum..			✓	
6a.	**Acceptable Alternate:** The available flow and pressure is acceptable for providing fire suppression and protection of life and property.				
7.	Location of fire department connection(s) serving fire sprinkler systems or standpipe systems does not meet CFC requirements.				✓
7a.	**Acceptable Alternate:** The location of fire department connection serving the fire sprinkler system and/or standpipe system is acceptable for providing fire suppression and protection of life and property.				

School District Acceptance of Acceptable Design Alternates

By signing this form, the school district acknowledges and accepts the proposed design as an alternative to Californ a Building Code (CBC) and California Fire Code (CFC) minimum requirements, as indicated by one or more of the conditions indicated at Items 4a, 5a, 6a or 7a, for providing fire and life safety protection of life and property.

Accepted by: _____ Title: _____

Signature: _____ Date: _____

LOCAL FIRE AUTHORITY (LFA) INFORMATION

LFA Agency Name: Fresno County Fire Protection District
LFA Review Official: Matthew S. Tarr
Title: Plan Examiner Work Phone: (559) 274-3925
Work Email: fss.tarr@gmail.com
LFA Reviewer's Signature: _____ Date: 4/23/25

DGS DSA 810 (revised 12/29/20) DIVISION OF THE STATE ARCHITECT | DEPARTMENT OF GENERAL SERVICES | Page 2 of 4 STATE OF CALIFORNIA

DSA

810

FIRE & LIFE SAFETY SITE CONDITIONS SUBMITTAL

Division of the State Architect (DSA) documents referenced within this publication are available on the DSA Forms or DSA Publications webpages.

To facilitate the Division of the State Architect's (DSA) fire and life safety plan review of project site conditions, DSA requires the design professional to provide the following information at time of project submittal for projects consisting of construction of a new campus, construction of new building(s), additions to existing buildings, and for site alternate design means for fire department emergency vehicle access, and fire suppression water supply.

Information associated with compliance items 1 through 3 below is to be provided for all project types indicated above. Information associated with items 4 through 7 is to be completed when an alternate means is utilized. Acknowledgement by the school district and signature from the Local Fire Authority (LFA) is only required when an alternate design means is being requested.

The Project Information and Fire & Life Safety Information sections are to be completed for all projects and managed onto the fire access site plan. When an alternate design/means is proposed, all sections on pages 1 and 2 are to be completed and imaged on the fire access site plan.

For additional information refer to the instructions at the end of this form and DSA Policy *PI, 09-01: Fire Flow for Buildings.*

PROJECT INFORMATION

School District/Owner: Washington Unified School District
Project Name/School: Washington Union High School - Student Services
Project Address: 6041 South Elm Avenue Fresno CA 93706

FIRE & LIFE SAFETY INFORMATION

1.	Has a fire hydrant flow test been performed within the past 12 months? *(If yes, provide a copy of the test data.)*	Yes ☑		No ☐
2.	Was the fire hydrant water flow test performed as part of this LFA review?	Yes ☑		No ☐
3.	Is the project located within a designated fire hazard severity zone (FHSZ) as established by Cal-Fire? *(If yes, indicate FHSZ classification below.)*	Yes ☐		No ☑
	Refer to the following website for FHSZ locations: http://egis.fire.ca.gov/FHSZ/	Moderate ☐	High ☐	Very High ☐
	Wildland Interface Area (WIFA) *(If any designations are checked, project design must meet the requirements of CBC Chapter 7A.)*			WIFA ☐

DGS DSA 810 (revised 12/29/20) DIVISION OF THE STATE ARCHITECT | DEPARTMENT OF GENERAL SERVICES | Page 1 of 4 STATE OF CALIFORNIA

KEY NOTES

1. PROPERTY LINE.
2. (E) 6' HIGH METAL FENCE TO REMAIN.
3. (E) FIRE HYDRANT TO REMAIN.
4. ACCESSIBLE PATH OF TRAVEL (P.O.T.). SEE P.O.T. NOTE, THIS SHEET.
5. (E) TRANSFORMER CMU WALL ENCLOSURE.
6. NOT USED.
7. (E) PUBLIC ROADWAY.
8. (E) DRIVE APPROACH TO REMAIN.
9. (N) ENTRANCE TOW-AWAY SIGNAGE, - SEE 17/A1.02.
10. (N) MIN. 20 FT. CLR. WIDE FIRE TRUCK ACCESS LANE. TURNAROUND PER CALIFORNIA FIRE CODE FIGURE D103.1 - 60 FOOT "Y"
11. (E) VAN ACCESSIBLE PARKING STALL .
12. (E) ACCESSIBLE PASSENGER DROP-OFF / LOADING ZONE
13. (N) DECORATIVE STEEL FENCE
14. (N) DECORATIVE STEEL GATE.
15. (N) DECORATIVE STEEL GATE FOR FIRE LANE. WELD KNOX BOX 3261 TO GATE OR DAISY CHAIN KNOX SHACKLE MODEL 3782
16. (E) DECORATIVE STEEL GATE FOR FIRE LANE. WELD KNOX BOX 3261 TO GATE OR DAISY CHAIN KNOX SHACKLE MODEL 3782.
17. (E) ACCESSIBLE CHAIN LINK GATE TO REMAIN- SEE APPLICATION NUMBER 02-113370 - CCD-079.
18. (E) DECORATIVE METAL GATE TO REMAIN.
19. (N) P.I.V & FIRE DEPARTMENT CONNECTION.
20. (N) PISTACIA CHINENSIS 'KEITH DAVEY' / CHINESE PISTACHE - 24" BOX SPECIMEN. INSTALL PER SCHOOL DISTRICT STANDARDS.
21. (E) DECORATIVE STEEL GATE- SEE APPLICATION NUMBER 02-112370.
22. (E) ENTRY NODES - SEE APPLICATION NUMBER 02-112370.
23. (E) TOW AWAY SIGNAGE- SEE APPLICATION NUMBER 02-112370.
24. (E) C.L. ROLLING GATE FOR FIRE LANE. WELD KNOX BOX 3261 TO GATE OR DAISY CHAIN KNOX SHACKLE MODEL 3782.
25. NOT USED.
26. P.I.V & FIRE DEPARTMENT CONNECTION- SEE CIVIL DRAWING E/C5.
27. (E) ACCESSIBLE PARKING STALL - SEE APPLICATION NUMBER 02-119607-CCD-004.
28. (E) ACCESSIBLE PARKING STALL - SEE APPLICATION NUMBER 02-113370-CCD-079.
29. REMOVE EXISTING NON-COMPLIANT WARNING DOMES AND PATCH CONCRETE WALKWAY TO MATCH EXISTING ADJACENT CONCRETE WALK LEVEL AND TEXTURE.
30. PV BATTERY, PV INVERTER AND TRANSFORMER IN CHAINLINK ENCLOSURE - SEE DETAIL 3/A1.01.
31. (N) DETECTABLE WARNING TRUNCATED DOMES AS PER 11B-705.1 - SEE DETAIL 1/A1.00

GENERAL NOTES

A. GENERAL CONTRACTOR SHALL FIELD VERIFY ALL SITE CONDITIONS PRIOR TO BID. IF ANY DISCREPANCIES ARE FOUND, THE ARCHITECT SHALL BE NOTIFIED IN WRITING.

B. THE CONTRACTOR SHALL BE RESPONSIBLE FOR ALL TEMPORARY FENCING DURING ALL ASPECTS OF CONSTRUCTION.

C. CONTRACTOR SHALL BE RESPONSIBLE FOR THE CORRECTNESS OF LAYOUTS AND ESTABLISHED LOCATIONS OF BURIED UTILITY LINES.

D. ANY UTILITIES REQUIRING RELOCATION SHALL BE THE RESPONSIBILITY OF THE GENERAL CONTRACTOR TO CONTACT APPLICABLE GOVERNING AGENCIES REGARDING ARRANGEMENT AND COORDINATION OF WORK.

E. GENERAL CONTRACTOR WILL BE RESPONSIBLE FOR ANY COMPACTION RETEST DUE TO INITIAL FAILURE.

F. A COPY OF TITLE-24, ALL PARTS APPLICABLE, TO BE KEPT AT THE JOB SITE AT ALL TIMES.

G. ADDENDA SHALL BE SIGNED BY THE ARCHITECT (RESPONSIBLE IN CHARGE) AND APPROVED BY DSA.

H. C.C.D.s SHALL BE SIGNED BY THE ARCHITECT (RESPONSIBLE IN CHARGE), OWNER AND APPROVED BY DSA.

I. TESTING LAB SHALL BE EMPLOYED BY THE OWNER, APPROVED BY THE RESPONSIBLE ARCHITECT AND DSA.

J. IF EXISTING MATERIALS OR ASSEMBLIES ARE DISTURBED OR DAMAGED BY THE WORK UNDER THIS CONTRACT, THEY SHALL BE REPLACED IN KIND AND TEXTURED AND FINISHED TO MATCH ADJACENT SURFACE.

K. NEW CONCRETE WALKS SHALL HAVE SLOPES NOT EXCEEDING 1 IN 20 IN THE DIRECTION OF PATH OF TRAVEL. PROVIDE CONTROL JOINTS ("C.J.") AT 5'-0" o.c. MAX. AND EXPANSION JOINTS NOT TO EXCEED 30'-0" MAX. PROVIDE MEDIUM BROOM FINISH ON ALL WALKS.

L. ALL BUILDING AND ROOM NAMES INDICATED ON THESE CONSTRUCTION DOCUMENTS ARE "NOT" THE ACTUAL BUILDING / ROOM SIGNAGE DESIGNATION. THE GENERAL CONTRACTOR SHALL FURNISH, INSTALL AND COORDINATE ALL REQUIRED SIGNAGE WITH THE OWNER/ARCHITECT PRIOR TO STARTING CONSTRUCTION.

M. 5'-0" DEEP x 5'-0" WIDE MINIMUM LANDINGS AT DOORWAYS SHALL BE AS DETAILED AND SHALL HAVE SLOPES (IN ALL DIRECTIONS) NOT GREATER THAN 1/4 IN 12 SLOPE. SLOPES SHALL BE AWAY FROM DOORWAYS.

N. GENERAL / SITE CONTRACTOR SHALL FIELD VERIFY THAT EXISTING PATH OF TRAVEL (P.O.T.) IS A MINIMUM OF 4'-0" WIDE AND IS SLIP RESISTANT. IF IT IS NOT, THEN THE CONTRACTOR SHALL NOTIFY THE ARCHITECT OF RECORD AND A REMEDY OR ALTERNATE P.O.T. WILL BE PROVIDED.

O. THE MAXIMUM DROP BETWEEN EXISTING FINISHED GRADES AND THE TOP OF THE P.O.T. SHOULD NOT EXCEED 4". IF IT IS NOT, PROVIDE THE NECESSARY WARNING CURB PER CBC SEC. 11B-303.5.

P. DETERIORATION OR EXISTING NON-COMPLIANT CONSTRUCTION: IF ANY CONDITION IS DISCOVERED WHICH, IF LEFT UNCORRECTED, WOULD MAKE THE BUILDING NON-COMPLIANT WITH THE REQUIREMENTS OF THE EDITION OF THE CBC IN FORCE AT THE TIME OF ORIGINAL CONSTRUCTION, THE CONDITION MUST BE CORRECTED IN ACCORDANCE WITH CURRENT CODE REQUIREMENTS. A C.C.D. OR A SEPARATE SET OF PLANS AND SPECIFICATIONS DETAILING AND SPECIFYING THE REQUIRED REPAIR WORK SHALL BE SUBMITTED TO AND APPROVED BY DSA BEFORE PROCEEDING WITH THE REPAIR WORK.

*PER DSA IR 16-1, SEC. 5.4

Q. COMPLY WITH CFC CHAPTER 33 'FIRE SAFETY DURING CONSTRUCTION AND DEMOLITION'.

PARKING CALCULATIONS

PARENT PARKING LOT #1:
13 EXISTING PARKING STALLS PROVIDED
1 EXISTING ACCESSIBLE STALL PROVIDED

STUDENT PARKING LOT #2:
48 EXISTING PARKING STALLS PROVIDED
2 EXISTING ACCESSIBLE STALLS PROVIDED

STAFF PARKING LOT #3:
63 EXISTING PARKING STALLS PROVIDED
3 EXISTING ACCESSIBLE STALLS PROVIDED
1 EXISTING VAN ACCESSIBLE STALL PROVIDED

HARDSCAPE SHADING

TOTAL SQUARE FOOTAGE OF HARDSCAPE SURFACE:	5,624 S.F.
REQUIRED SQUARE FOOTAGE OF HARDSCAPE SURFACE SHADED (20%):	1,124 S.F.

TREE CANOPY AREA

MEDIUM: 20' - 30' DIA.	EACH @ 490 S.F.
Existing Trees	2
PISTACIA chinensis	1
Full Shade Tree (100% Shaded):	3 @ 490 S.F. =1,470 S.F.
TOTAL SQUARE FOOTAGE:	1,470 S.F.
PERCENTAGE OF HARDSCAPE SURFACE SHADED:	26%

PATH OF TRAVEL

THE PATH OF TRAVEL (P.O.T.) IDENTIFIED IN THESE CONSTRUCTION DOCUMENTS IS COMPLIANT WITH THE CURRENT APPLICABLE CALIFORNIA BUILDING CODE ACCESSIBILITY PROVISIONS FOR PATH OF TRAVEL REQUIREMENTS FOR ALTERATIONS, ADDITIONS AND STRUCTURAL REPAIRS. AS PART OF THE DESIGN OF THIS PROJECT, THE P.O.T. WAS EXAMINED AND ANY ELEMENTS, COMPONENTS OR PORTIONS OF THE P.O.T. THAT WERE DETERMINED TO BE NONCOMPLIANT 1) HAVE BEEN IDENTIFIED AND 2) THE CORRECTIVE WORK NECESSARY TO BRING THEM INTO COMPLIANCE HAS BEEN INCLUDED WITHIN THE SCOPE OF THIS PROJECT'S WORK THROUGH DETAILS, DRAWINGS AND SPECIFICATIONS INCORPORATED INTO THESE CONSTRUCTION DOCUMENTS. ANY NONCOMPLIANT ELEMENTS, COMPONENTS OR PORTIONS OF THE P.O.T. THAT WILL NOT BE CORRECTED BY THIS PROJECT BASED ON VALUATION THRESHOLD LIMITATIONS OR A FINDING OF UNREASONABLE HARDSHIP ARE SO INDICATED IN THESE CONSTRUCTION DOCUMENTS.

DURING CONSTRUCTION, IF P.O.T. ITEMS WITHIN THE SCOPE OF THE PROJECT REPRESENTED AS CBC COMPLIANT ARE FOUND TO BE NONCONFORMING BEYOND REASONABLE CONSTRUCTION TOLERANCES, THEY SHALL BE BROUGHT INTO COMPLIANCE WITH THE CBC AS A PART OF THIS PROJECT BY MEANS OF A CONSTRUCTION CHANGE DOCUMENT.

ARCHITECT HAS INSPECTED THE PATH OF TRAVEL (P.O.T.) AS INDICATED ON THE PLANS AND HAS FOUND IT TO BE, OR HAS INDICATED ON THE PLANS REMEDIAL WORK WHICH WOULD CAUSE IT TO BE, A BARRIER-FREE ACCESSIBLE ROUTE:

- AT LEAST 48" IN WIDTH; OR AS APPROVED BY CODE
- FREE OF ABRUPT LEVEL CHANGES EXCEEDING ¼" IF BEVELED AT 1:2 MAX SLOPE, OR VERTICAL LEVEL CHANGES EXCEEDING ½"
- WITH A FIRM, STABLE, AND SLIP RESISTANT WALKING SURFACE
- WITH A RUNNING SLOPE OF 1:20 (5%) OR LESS AND WITH A CROSS SLOPE OF 1:50 (2%) OR LESS OR A RAMP WITH A RUNNING SLOPE OF 1:12 (8.33%) AND A CROSS SLOPE OF 1:50 (2%) WITH APPROPRIATE REQUIREMENTS AS DETAILED WITHIN THIS SET OF DOCUMENTS.
- IS FREE OF OVERHEAD OBSTRUCTIONS WITHIN 80" ABOVE THE WALKING SURFACE
- IS FREE OF OBJECTS WHICH PROTRUDE MORE THAN 4" BETWEEN THE HEIGHTS OF 27" AND 80" ABOVE THE WALKING SURFACE

FIRE DEPARTMENT NOTES

A. PROVIDE APPROVED POLICE / FIRE BYPASS LOCK ("BEST" PADLOCK MODEL 21B700 SERIES OR ELECTRIC CYLINDER SWITCH MODEL 1W7B2) ON DRIVE ACCESS GATE(S). ALL ELECTRIFIED GATES SHALL BE EQUIPPED WITH THE BEST ELECTRIC CYLINDER LOCK 1W7B2. A KNOX PADLOCK MAY NOT BE USED IN PLACE OF THE BEST PADLOCK MODEL 21B700. THESE LOCKS CAN BE PURCHASED ONLY THROUGH SIERRA LOCK & GLASS, 1560 N. PALM AVENUE, FRESNO, CA 93728.

B. ACCESS SHALL BE MAINTAINED WITH A MINIMUM CLEAR DRIVE WIDTH OF AT LEAST 20 FEET. ADDITIONAL CLEAR WIDTHS MAY BE REQUIRED AND SHALL BE APPROVED BY THE FIRE MARSHALL (OR DESIGNEE). (FFD DEVELOPMENT POLICY 403.002)

C. EMERGENCY VEHICLE ACCESS SHALL BE DESIGNATED BY PAINTING THE CURB RED (TOP AND SIDE) AND STENCILING "FIRE LANE NO PARKING" IN 3-INCH WHITE LETTERS ON THE MOST VERTICAL CURB, AT LEAST EVERY 50 FEET. IF NO CURB IS PRESENT, A MINIMUM OF 6-INCH-WIDE RED STRIPE SHALL BE PAINTED ALONG THE EDGE OF THE ROAD WAY WITH "FIRE LANE" IN 3-INCH WHITE LETTERS AT LEAST EVERY 50 FEET. NOTE: SIGNS MAY BE USED IN CONJUNCTION WITH, OR IN LIEU OF, CURB PAINTING. (FFD DEVELOPMENT POLICY 403.005).

D. PROVIDE SIGN(S) (17" x 22" MINIMUM) AT ALL PUBLIC ENTRANCE DRIVES TO THE PROPERTY WHICH STATE "WARNING - VEHICLES STOPPED, PARKED OR LEFT STANDING IN FIRE LANES WILL BE IMMEDIATELY REMOVED AT OWNER'S EXPENSE - 22658(a) CALIFORNIA VEHICLE CODE - FRESNO POLICE DEPARTMENT 621-7000"

E. ELECTRIC GATES SHALL BE PROVIDED WITH BATTERY BACK-UP. IN ADDITION, ALL ELECTRIFIED GATES SHALL BE EQUIPPED WITH THE BEST ELECTRIC CYLINDER LOCK 1W7B2.

LEGEND

- EXISTING BUILDING
- NEW BUILDING SEE REFERENCED APPLICATION NO.
- EXISTING LANDSCAPE TO REMAIN
- FIRE TRUCK ACCESS LANE
- DESIGNATES ACCESSIBLE ROUTE / PATH OF TRAVEL
- NEW DECORATIVE METAL FENCING
- PROPERTY LINE
- NC NON-DSA CONFORMING BUILDINGS
- NEW TREE (PISTACIA CHINENSIS 'KEITH DAVEY' / CHINESE PISTACHE - 24" BOX SPECIMEN)

IDENTIFICATION STAMP
DIV. OF THE STATE ARCHITECT
APP: 02-123307 INC:
REVIEWED FOR
SS ☑ FLS ☑ ACS ☑
DATE: 10/15/2025

Owner:
WASHINGTON UNIFIED SCHOOL DISTRICT

WASHINGTON UNIFIED SCHOOL DISTRICT
7950 SOUTH ELM AVE.
FRESNO, CA 93706

Project Name:
STUDENT SERVICES

Project Address:
WASHINGTON UNION HIGH SCHOOL
6041 SOUTH ELM AVE.
FRESNO, CA 93706

integrated designs
by SOMAM, Inc.

ARCHITECTURE
ENGINEERING
INTERIOR DESIGN

6011 N. FRESNO STREET, SUITE 130
FRESNO CALIFORNIA 93710
P:(559) 436-0881 F:(559) 436-0887
E: design@somam.com
integrateddesigns.com

Ownership of Documents
This document, the ideas and designs incorporated herein, as an instrument of Professional Service is the property of Integrated Designs by SOMAM Inc. and is not to be used, in whole or in part for any other project without written authorization.
© COPYRIGHT 2024

Stamp:
LICENSED ARCHITECT FELIPE CEBALLOS No. C 12834 8-11-26 STATE OF CALIFORNIA

Sheet Title:
MASTER SITE PLAN

Job No.:
5613

Sheet No.:
A1.00

Release: DSA SUBMITTAL 04-02-25

GENERAL NOTES

A. GENERAL CONTRACTOR SHALL FIELD VERIFY ALL SITE CONDITIONS PRIOR TO BID. IF ANY DISCREPANCIES ARE FOUND, THE ARCHITECT SHALL BE NOTIFIED IN WRITING.

B. CONTRACTOR SHALL BE RESPONSIBLE FOR THE CORRECTNESS OF LAYOUTS AND ESTABLISHED LOCATIONS OF BURIED UTILITY LINES. ANY UTILITIES REQUIRING RELOCATION SHALL BE THE RESPONSIBILITY OF THE GENERAL CONTRACTOR CONTACT APPLICABLE GOVERNING AGENCIES REGARDING ARRANGEMENT AND COORDINATION OF WORK.

C. GENERAL CONTRACTOR WILL BE RESPONSIBLE FOR ANY COMPACTION RETEST DUE TO INITIAL FAILURE.

D. PROJECT INSPECTOR SHALL BE EMPLOYED BY THE OWNER, APPROVED BY THE RESPONSIBLE ARCHITECT AND DSA.

E. A COPY OF TITLE-24, ALL PARTS APPLICABLE, TO BE KEPT AT THE JOB SITE AT ALL TIMES.

F. ADDENDA SHALL BE SIGNED BY THE ARCHITECT (RESPONSIBLE IN CHARGE) AND APPROVED BY DSA.

G. C.C.D.s SHALL BE SIGNED BY THE ARCHITECT (RESPONSIBLE IN CHARGE), OWNER AND APPROVED BY DSA.

H. TESTING LAB SHALL BE EMPLOYED BY THE OWNER, APPROVED BY THE RESPONSIBLE ARCHITECT AND DSA.

I. ALL WORK SURFACES DISTURBED OR DAMAGED BY THE CONSTRUCTION ACTIVITIES SHALL BE REPAIRED IN KIND, TEXTURED AND FINISHED TO MATCH ADJACENT SURFACES.

J. NEW CONCRETE WALKS SHALL HAVE SLOPES NOT TO EXCEED 1 IN 20 IN THE DIRECTION OF PATH OF TRAVEL, PROVIDE CONTROL JOINTS ("C.J.") AT 5'-0" o.c. MAXIMUM AND EXPANSION JOINTS NOT TO EXCEED 30'-0" MAXIMUM PROVIDE MEDIUM BROOM FINISH ON ALL WALKS.

K. ALL BUILDING AND ROOM NAMES INDICATED ON THESE CONSTRUCTION DOCUMENTS ARE "NOT" THE ACTUAL BUILDING/ ROOM SIGNAGE DESIGNATION. THE GENERAL CONTRACTOR SHALL FURNISH, INSTALL AND COORDINATE ALL REQUIRED SIGNAGE WITH THE OWNER / ARCHITECT PRIOR TO STARTING CONSTRUCTION.

L. 5'-0" DEEP x 5'-0" WIDE MINIMUM LANDINGS AT DOORWAYS SHALL BE AS DETAILED AND SHALL HAVE SLOPES (IN ANY DIRECTION) OF NOT GREATER THAN 1/4 IN 12 SLOPE. SLOPES SHALL BE AWAY FROM DOORWAYS.

M. GENERAL / SITE CONTRACTOR SHALL FIELD VERIFY THAT EXISTING PATH OF TRAVEL (P.O.T.) IS A MINIMUM OF 4'-0" WIDE AND IS SLIP RESISTANT. IF IT IS NOT, THEN THE CONTRACTOR SHALL NOTIFY THE ARCHITECT OF RECORD AND A REMEDY OR ALTERNATE P.O.T. WILL BE PROVIDED.

N. THE MAXIMUM DROP BETWEEN EXISTING FINISHED GRADES AND THE TOP OF THE P.O.T. SHOULD NOT EXCEED 4". IF IT DOES, PROVIDE THE NECESSARY WARNING CURB PER CBC SEC. 11B-303.5.

O. DETERIORATION OR EXISTING NON-COMPLIANT CONSTRUCTION:

IF ANY CONDITION IS DISCOVERED WHICH, IF LEFT UNCORRECTED, WOULD MAKE THE BUILDING NON-COMPLIANT WITH THE REQUIREMENTS OF THE EDITION OF THE CBC IN FORCE AT THE TIME OF ORIGINAL CONSTRUCTION, THE CONDITION MUST BE CORRECTED IN ACCORDANCE WITH CURRENT CODE REQUIREMENTS. A C.C.D. OR A SEPARATE SET OF PLANS AND SPECIFICATIONS DETAILING AND SPECIFYING THE REQUIRED REPAIR WORK SHALL BE SUBMITTED TO AND APPROVED BY DSA BEFORE PROCEEDING WITH THE REPAIR WORK.

*PER DSA IR 16-1, SEC. 5.4

P. SEE CIVIL AND ELECTRICAL DRAWINGS FOR ADDITIONAL DEMOLITION WORK.

Q. ALL DIMENSIONS TO BE FIELD VERIFIED

R. (E) MECH. UNITS AND THERMOSTATS TO BE SALVAGED AND RETURNED TO OWNER

S. THE SCHOOL DISTRICT, IN COLLABORATION WITH THE PROJECT CONTRACTOR IS RESPONSIBLE FOR DEVELOPING AN SITE SAFETY PLAN (SSP) ADDRESSING THE REQUIREMENTS OF CFC CHAPTER 33. AS FIRST RESPONDERS, DSA RECOMMENDS THAT DEVELOPMENT OF THE SSP BE IN CONSULTATION AND COORDINATION WITH THE LOCAL FIRE AUTHORITY.

LEGEND

- DEMOLITION AREA
- EXISTING BUILDING TO REMAIN (N.I.C.)
- NEW BUILDING SEE REFERENCED APPLICATION NO.
- NEW CONCRETE WALK OR PAD
- EXISTING LANDSCAPE TO REMAIN
- EXISTING TREES TO REMAIN
- EXISTING TREES TO BE REMOVED
- ASSUMED PROPERTY LINE
- NEW DECORATIVE METAL FENCING

KEY NOTES

1. (E) STUDENT CENTER BUILDING, CONCRETE SLAB AND FOUNDATION TO BE REMOVED. SEE DSA#: 30925, 33306 & 58502. EXISTING AIR CONDITIONING UNITS AND THERMOSTATS TO BE SALVAGED AND RETURNED TO THE DISTRICT.
2. (E) UNIT K BUILDING, CONCRETE SLAB AND FOUNDATION TO BE REMOVED. SEE DSA#: 26421. EXISTING AIR CONDITIONING UNITS AND THERMOSTATS TO BE SALVAGED AND RETURNED TO THE DISTRICT.
3. (E) CONCRETE PAVING, TURF, AND IRRIGATION LINES TO BE REMOVED. VERIFY EXTENT OF IRRIGATION DEMO AND LOCATION OF P.O.C. WITH DISTRICT.
4. (E) UTILITIES TO REMAIN.
5. (E) UTILITIES TO BE REMOVED.
6. (E) TREE & ROOTS TO BE REMOVED.
7. (E) BUILDING TO REMAIN
8. (E) LANDSCAPE TO REMAIN.
9. (E) TREE TO REMAIN. PROTECT IN PLACE.
10. (E) BUILDING ROOF LINE TO REMAIN.
11. (E) FIRE ACCESS GATE TO BE REMAIN.
12. (E) SWITCH GEAR TO REMAIN UNTIL NEW EQUIPMENT IS INSTALLED.
13. (E) TRANSFORMER CMU WALL ENCLOSURE TO REMAIN.
14. (E) CONCRETE PAVEMENT TO REMAIN.
15. (E) STORM DRAIN MANHOLE - SEE CIVIL DRAWINGS.
16. (N) 4" THICK CONCRETE WALK w/ MEDIUM BROOM FINISH. SLOPE 2% MAXIMUM & 1% MIN IN ANY DIRECTION, - SEE DETAIL 2/A1.02.
17. NOT USED.
18. (N) STAINLESS STEEL, SURFACE MOUNTED WAVE RACK BIKE - SEE DETAIL 14/A1.02.
19. (N) BUILDING ROOF LINE. SEE ROOF PLAN - A4.01.
20. (N) 6'-5" HT. DECORATIVE METAL GATE, - SEE 9/A1.02.
21. (N) 6'-5" HT. DECORATIVE METAL FENCE, - SEE 5/A1.02.
22. (E) CONC. RAMP & HANDRAIL TO BE REMOVED.
23. WHARF HYDRANT TO BE CAPPED.
24. (N) 6'-5" HT. DECORATIVE METAL DOUBLE GATE @ FIRE LANE- SEE 16/A1.02.
25. (N) DRAIN INLETS- SEE CIVIL DRAWINGS.
26. NOT USED.
27. (N) BATTERY ENERGY STORAGE SYSTEM- SEE ELECTRICAL DRAWING 7/E2.23.
28. (N) CONC. TRENCH DRAIN w/ S.S. COVER- SEE CIVIL DRAWINGS C3 AND J/C5.
29. (N) CONC. ELECTRICAL PULL BOXES- SEE ELECTRICAL DRAWINGS E1.13 AND 1/E7.03.
30. (N) 6' HT. CHAINLINK FENCE -SEE DETAIL 25 / A1.02.
31. (N) 6' HT. CHAINLINK GATE - SEE DETAIL 25/A1.02.
32. (N) TRANSFORMER - SEE ELECTRICAL DETAIL 7/E2.23.
33. (N) ELECTRICAL EV BATTERY - SEE ELECTRICAL DETAIL 7/E2.23..
34. 24"x36" ACCESS CLEARANCE.
35. (E) CHAINLINK FENCE TO REMAIN.
36. (E) TURF TO REMAIN.
37. (E) CONC. WALK TO REMAIN.
38. (N) P.V. INVERTER - SEE ELECTRICAL DETAIL 7/E2.23.

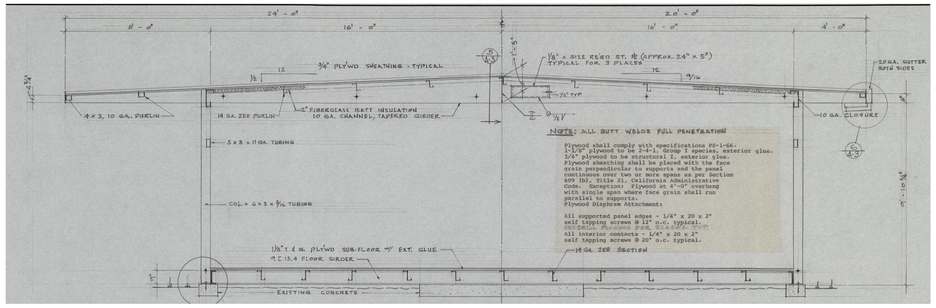

EXISTING STUDENT SERVICES MODULAR BUILDING SECTION (FOR REFERENCE)

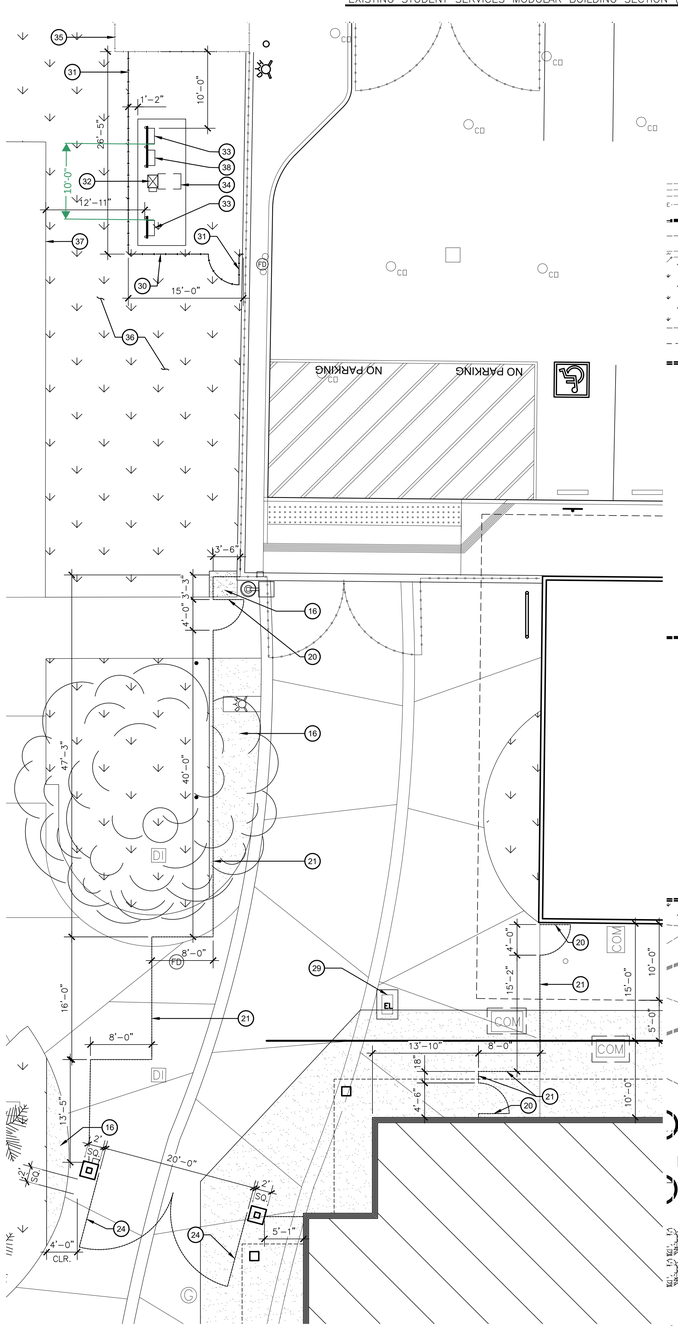

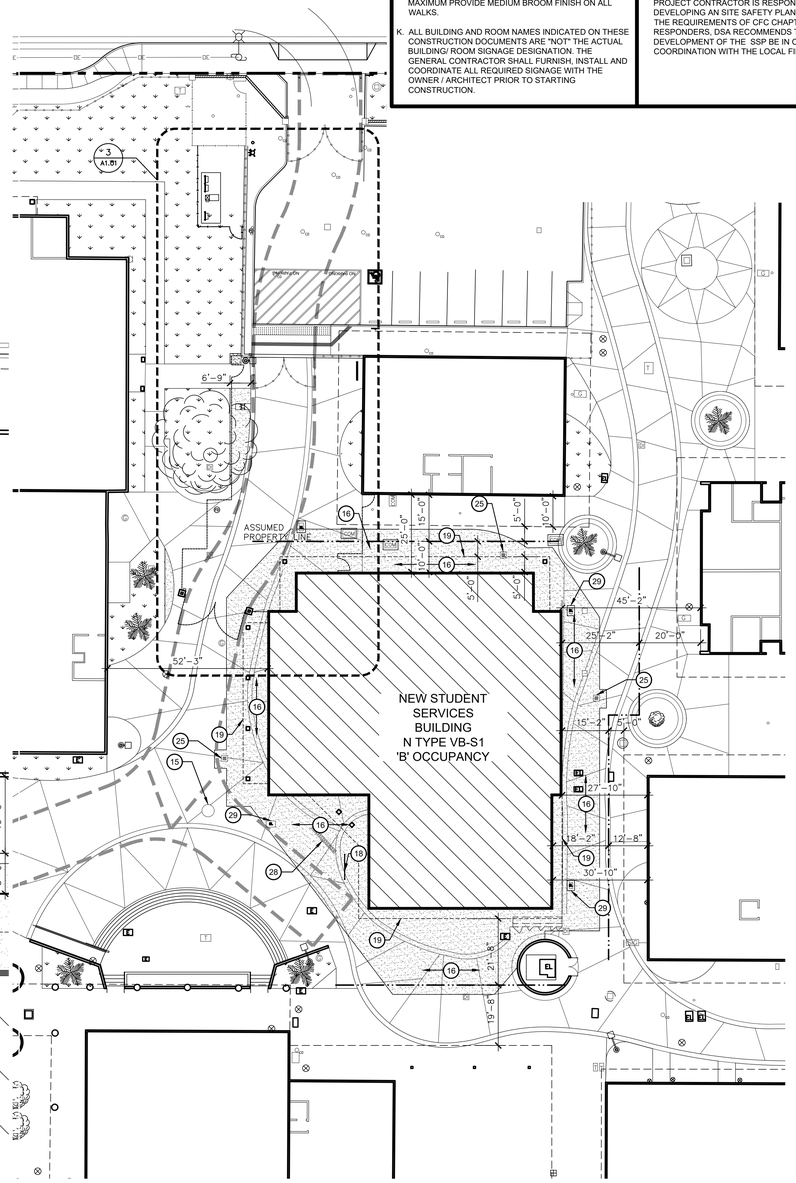

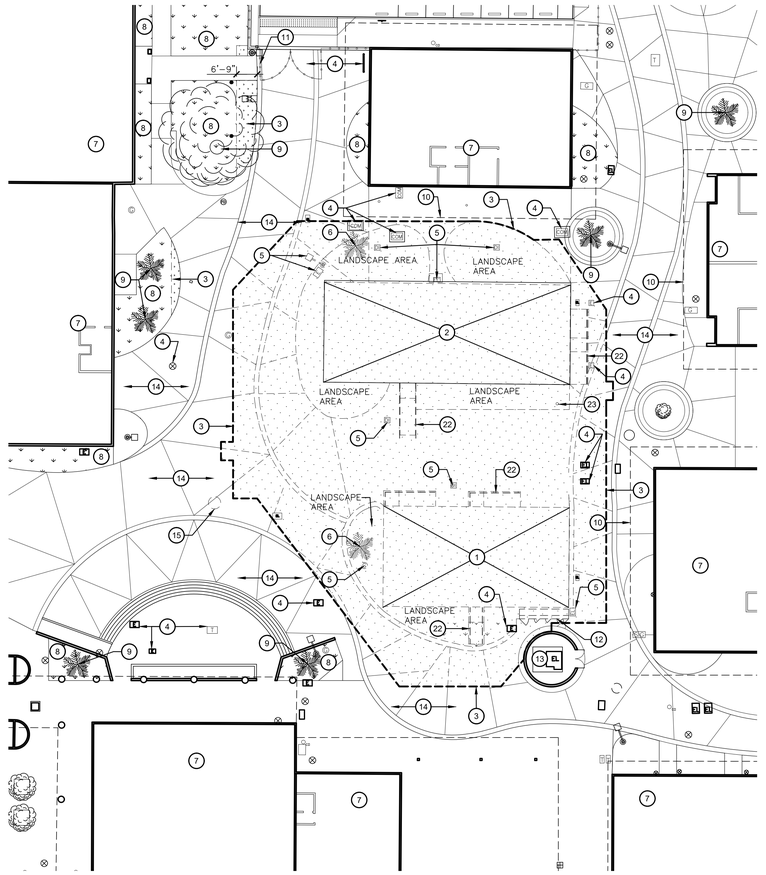

NOTE:
"The Architect and Owner acknowledge that the information shown regarding utilities and underground conditions on the demolition plans is based on a combination of field investigations and available record drawings. Given that the site has been continuously occupied and under construction for the past 80 years, it is highly likely that unknown or undocumented underground items remain. While every effort has been made to depict known conditions accurately, the Contractor shall exercise extreme caution during all excavation activities, particularly during over excavation. The potential for encountering unforeseen buried infrastructure or materials is significant. The Contractor is responsible for implementing appropriate safety measures and investigative procedures to mitigate risks associated with unknown underground conditions."

3 ENLARGED SITE PLAN – FENCE
1/8" = 1'-0"

2 A1.01 **ENLARGED SITE PLAN**
STUDENT SERVICES SCALE: 1"=20'

1 A1.01 **DEMO SITE PLAN**
STUDENT SERVICES SCALE: 1"=20'

IDENTIFICATION STAMP
DIV. OF THE STATE ARCHITECT
APP: 02-123307 INC:
REVIEWED FOR
SS ☑ FLS ☑ ACS ☑
DATE: 10/15/2025

Owner:
WASHINGTON UNIFIED SCHOOL DISTRICT

WASHINGTON UNIFIED SCHOOL DISTRICT
7950 SOUTH ELM AVE.
FRESNO, CA 93706

Project Name:
STUDENT SERVICES

Project Address:
WASHINGTON UNION HIGH SCHOOL
6041 SOUTH ELM AVE.
FRESNO, CA 93706

integrated designs
by SOMAM, Inc.

ARCHITECTURE ENGINEERING INTERIOR DESIGN

6011 N. FRESNO STREET, SUITE 130
FRESNO CALIFORNIA 93710
P:(559) 436-0881 F:(559) 436-0887
E: design@somam.com
integrateddesigns.com

Ownership of Documents
This document, the ideas and designs incorporated herein, as an instrument of Professional Service is the property of Integrated Designs by SOMAM Inc. and is not to be used, in whole or in part for any other project without written authorization.

© COPYRIGHT 2024

Stamp:
LICENSED ARCHITECT FELIPE CEBALLOS No. C 12834 8-31-27 STATE OF CALIFORNIA

Sheet Title:
DEMO & ENLARGED SITE PLAN

Job No.: **5613**

Sheet No.: **A1.01**

Release: DSA SUBMITTAL 04-02-25

G:\2023\rs\23-5613 WASHINGTON UNION HIGH SCHOOL - STUDENT SERVICES\Sheets\5613-A1.01 DEMO & ENLARGED SITE PLAN.dwg
FRANK AYALA 9/22/25

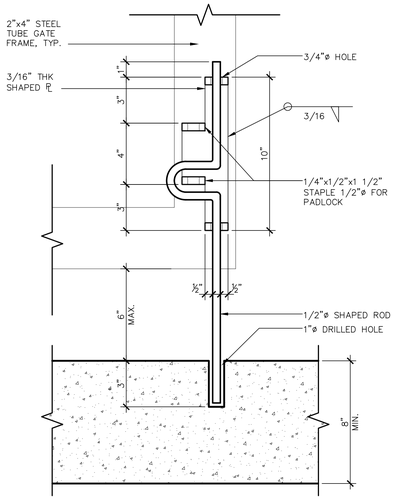

22 A1.02 SLIDE BOLT (ONLY @ NON-ACCESSIBLE GATES)

ADS120-02 SCALE: 3" = 1'-0"

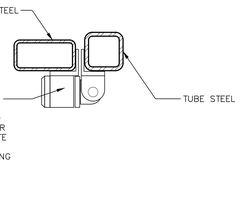

16 A1.02 GATE HINGE

ADY100-13 SCALE: 3" = 1'-0"

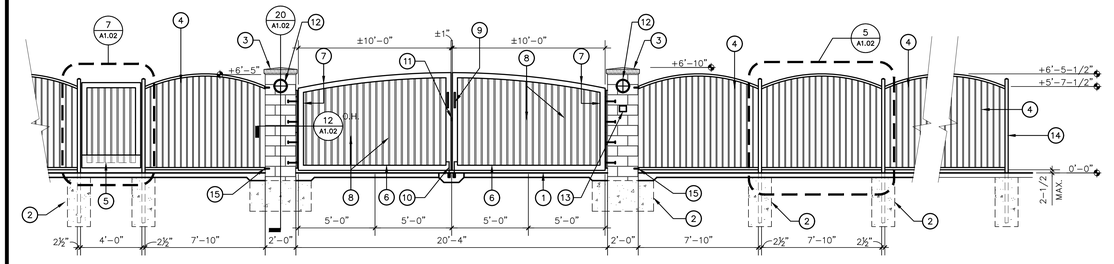

11 A1.02 DECORATIVE METAL DOUBLE GATE AT FIRE ACCESS LANE

SCALE: 1/4" = 1'-0"

MTL. GATE KEY NOTES

1. CONCRETE WALK – SEE SITE PLAN & CIVIL DRAWINGS.
2. CONCRETE FOOTING – SEE DETAIL 5/A1.02 .
3. 26" SQ. PRE-CAST CONCRETE CAP w/ 2-1/2" HIGH PYRAMID TOP.
4. DECORATIVE STEEL FENCE – SEE 5/A1.02.
5. DECORATIVE METAL GATE – SEE 7/A1.02, POWDER COAT FRAME
6. CUSTOM FABRICATED METAL DOUBLE GATE – POWDER COAT FRAME.
7. 2"x4"x3/16" HSS DECORATIVE METAL GATE & FRAME– POWDER COAT FRAME
8. DECORATIVE METAL SQUARE PICKETS– SEE 5/A1.02.
9. 1" DIA X 18" LONG SOLID STRUCTURAL METAL PULLS FOR CHAIN.
10. 1/2" STEEL RODS – SEE 22/A1.02.
11. STEEL REINFORCEMENT – FOR LOCKING DEVICE – SEE 18/A1.02.
12. LIGHT FIXTURE – SEE 20/A1.02 & ELECTRICAL DRAWINGS.
13. PADLOCK WITH FIRE KEY IN ADJACENT POLICE / FIRE APPROVED KNOX BOX ("BEST" PADLOCK MODEL 21B700 OR ELECTRIC CYLINDER SWITCH MODEL 1W7B2).
14. DECORATIVE METAL TUBE POSTS– SEE 5/A1.02.
15. EXPANSION BOLT– SEE 12/A1.02

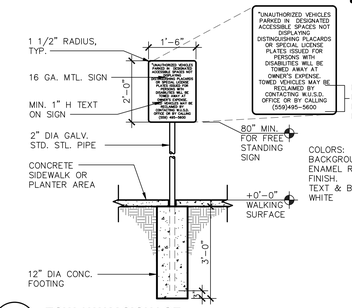

17 A1.02 TOW AWAY SIGNAGE

ADX100-10 SCALE: 1/2" = 1'-0"

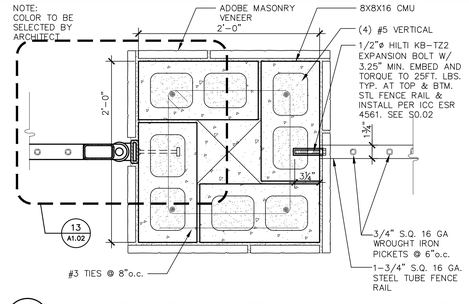

12 A1.02 CMU BLOCK PILASTER AT DECORATIVE METAL GATE & FENCE

ADS100-47 SCALE: 1 1/2" = 1'-0"

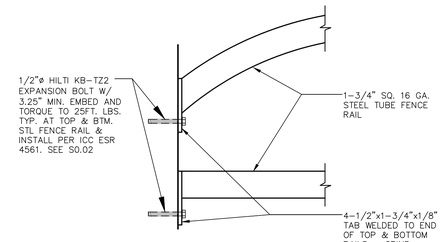

7 A1.02 FENCE TOP & BOTTOM RAIL ATTACHMENT

ADS100-62 SCALE: 3" = 1'-0"

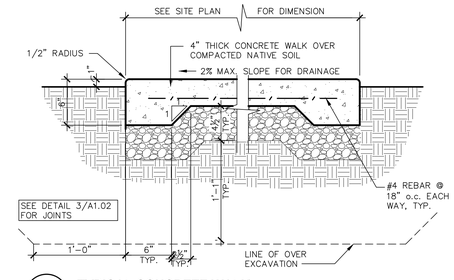

2 A1.02 TYPICAL CONCRETE WALK

ADS100-15 SCALE: 1 1/2" = 1'-0"

TYPICAL FENCE & GATE KEYNOTES

1. 4" O.D. GALVANIZED STEEL GATE POST (9.1 lb/ft)
2. 2 7/8" O.D. GALVANIZED STEEL END OR CORNER POST (5.79 lb/ft)
3. 2" O.D. GALVANIZED STEEL GATE FRAME (2.72 lb/ft)
4. 1 5/8" O.D. GALVANIZED STEEL HORIZONTAL RAIL (2.27 lb/ft)
5. 2"x2" MESH x 9 GAUGE GALVANIZED FENCE FABRIC WITH KNUCKLED TOP AND BOTTOM SELVAGE. FENCE FABRIC TO BE GALVANIZED BEFORE WEAVING (GBW)
6. 1/4"x3/4" GALVANIZED STEEL STRETCHER BAR
7. GALVANIZED STEEL STRETCHER BAR TENSION BAND, MIN. OF 6 TENSION BANDS
8. 9 GAUGE (0.148" DIA.) GALVANIZED STEEL TIE WIRES OR HOG RINGS AT 15" MAX. SPACING. MIN. 8 TIE WIRES PER EACH 10' HORIZONTAL RAIL
9. GALVANIZED ADJUSTABLE TURNBUCKLE FOR 3/8" DIA. TRUSS ROD
10. 3/8" DIA. GALVANIZED STEEL ADJUSTABLE TRUSS ROD. TRUSS RODS REQUIRED FOR ALL GATE POST PANELS AND END OR CORNER POST PANELS
11. 3/8"x6" GALVANIZED HOOK BOLT WITH NUT IMBEDDED IN MIDWAY BETWEEN POSTS
12. 7 GAUGE (0.177" DIA.) GALVANIZED STEEL TENSION WIRE
13. RAINPROOF CAP
14. LOCKING HASP
15. 180° GATE HINGE, TYP
16. 12"ø CONCRETE POST FOOTING (TYP.)
17. 2 7/8" O.D. GALVANIZED STEEL END OR CORNER POST (5.79 lb/ft) AT END OF RUN ONLY.
18. 4" THICK CONCRETE MOWSTRIP – SEE DETAIL 8/A1.02

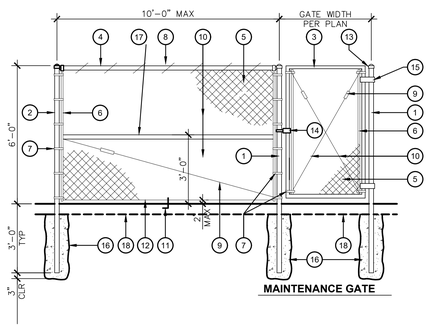

25 A1.02 TYPICAL CHAIN LINK FENCE AND GATES

ADY100-02B SCALE: N.T.S.

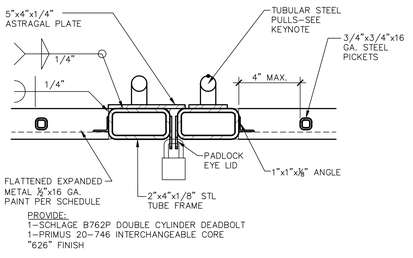

18 A1.02 LOCKING DEVICE @ GATE

ADS120-04 SCALE: 3" = 1'-0"

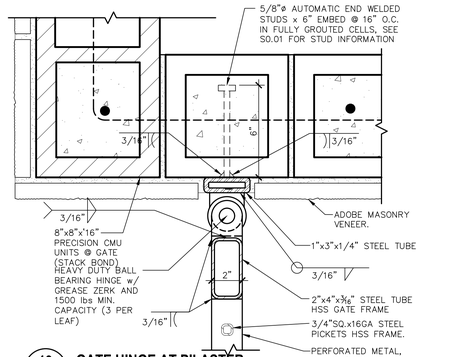

13 A1.02 GATE HINGE AT PILASTER

ADA220-02 SCALE: 3" = 1'-0"

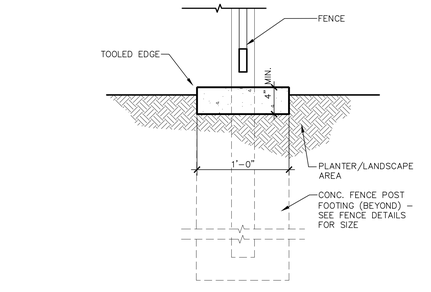

8 A1.02 CONCRETE MOWSTRIP @ FENCE

ADS100-61 SCALE: 1 1/2" = 1'-0"

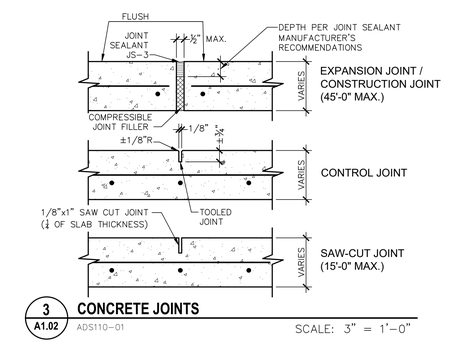

3 A1.02 CONCRETE JOINTS

ADS110-01 SCALE: 3" = 1'-0"

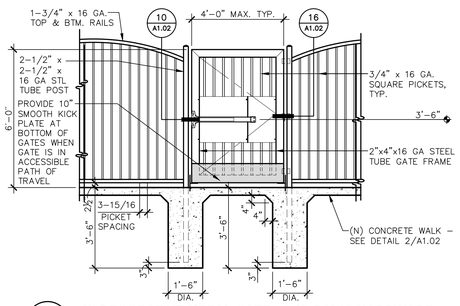

9 A1.02 (N) DECORATIVE METAL GATE w/ (N) PANIC HARDWARE

ADS100-56 SCALE: 3/8" = 1'-0"

4 A1.02 (N) CONC WALK TO (E) CONC WALK

ADS100-05 SCALE: 1 1/2" = 1'-0"

20 A1.02 ENTRY PILASTER

ADY100-03 SCALE: 1" = 1'-0"

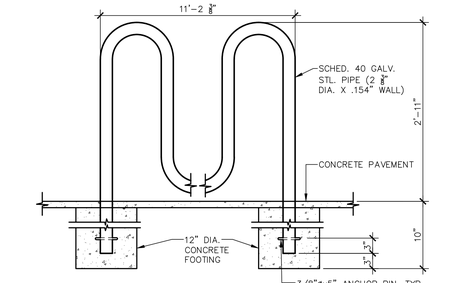

14 A1.02 BIKE RACK (5 BIKES)

ADQ130-02 SCALE: 1" = 1'-0"

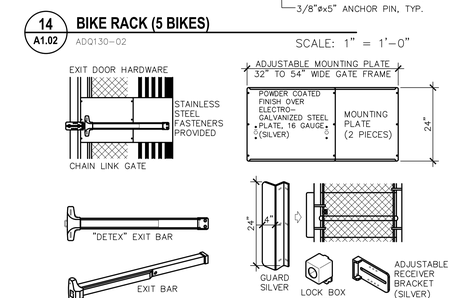

15 A1.02 PANIC DOOR HARDWARE

ADY100-02 SCALE: 1 1/2" = 1'-0"

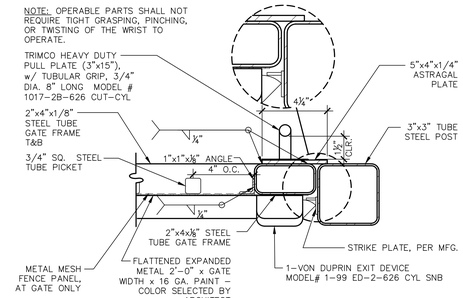

10 A1.02 LOCKING DEVICE @ ACCESSIBLE GATE

ADS100-54 SCALE: 3" = 1'-0"

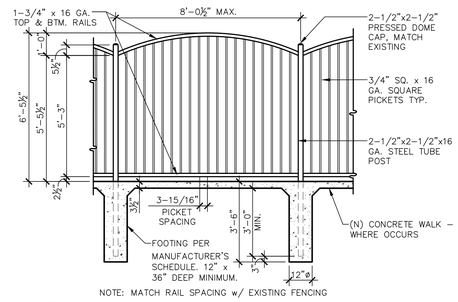

5 A1.02 DECORATIVE METAL FENCE

ADS100-50 SCALE: 3/8" = 1'-0"

IDENTIFICATION STAMP
DIV. OF THE STATE ARCHITECT
APP: 02-123307 INC:
REVIEWED FOR
SS ☑ FLS ☑ ACS ☑
DATE: 10/15/2025

Owner:
WASHINGTON UNIFIED SCHOOL DISTRICT

WASHINGTON UNIFIED SCHOOL DISTRICT
7950 SOUTH ELM AVE.
FARMERSVILLE, CA 93223

Project Name:
STUDENT SERVICES

Project Address:
WASHINGTON UNION HIGH SCHOOL
6041 SOUTH ELM AVE.
FRESNO, CA 93706

integrated designs
by SOMAM, Inc.
ARCHITECTURE
ENGINEERING
INTERIOR DESIGN
6011 N. FRESNO STREET, SUITE 130
FRESNO CALIFORNIA 93710
P:(559) 436-0881 F:(559) 436-0887
E: design@somam.com
integrateddesigns.com

Ownership of Documents
This document, the ideas and designs incorporated herein, as an instrument of Professional Service is the property of Integrated Designs by SOMAM Inc. and is not to be used, in whole or in part for any other project without written authorization.
© COPYRIGHT 2024

Stamp:
LICENSED ARCHITECT
KEITH E. CEBALLOS
No. C 12834
EXP. 8-31-27
STATE OF CALIFORNIA

Sheet Title:
SITE DETAILS

Job No.: **5613**

Sheet No.: **A1.02**

Release: DSA SUBMITTAL 04-02-25

G:\2023frs\23-5613 WASHINGTON UNION HIGH SCHOOL - STUDENT SERVICES\Sheets\5613-A1.02 SITE DETAILS.dwg FRANK AYALA 9/22/25

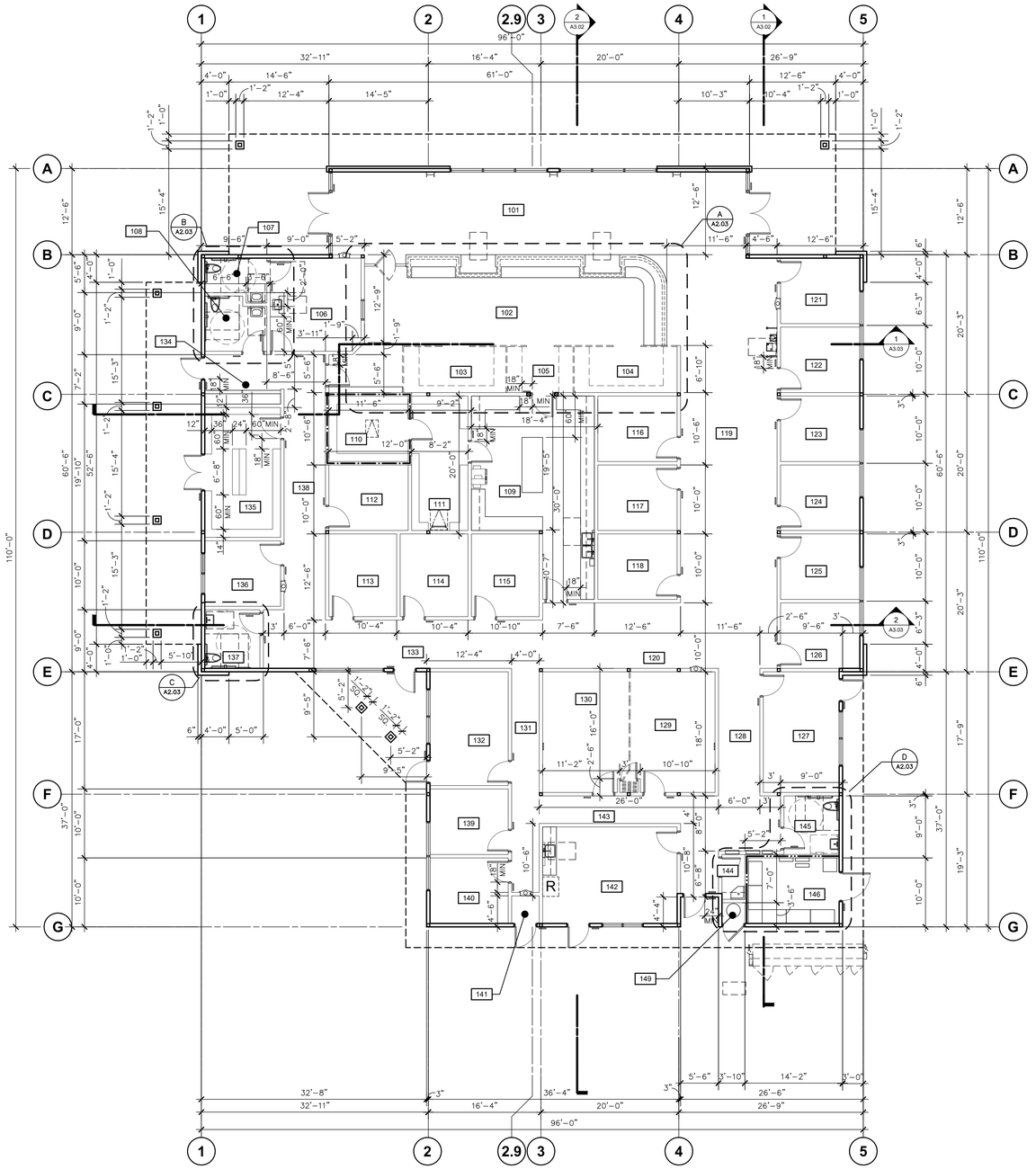

DIMENSION FLOOR PLAN

STUDENT SERVICES

SCALE: 1/8" = 1'-0"

ROOM NAMES

101	LOBBY
102	CIVIC ADMINISTRATION
103	ADMIN
104	ADMIN
105	HALL
106	NURSE
107	TOILET ROOM
108	TOILET ROOM
109	WORKING ROOM
110	ARCHIVE STORAGE
111	PAPER STORAGE
112	OFFICE
113	OFFICE
114	OFFICE
115	OFFICE
116	OFFICE
117	OFFICE
118	OFFICE
119	WAITING ROOM
120	WAITING ROOM
121	OFFICE
122	OFFICE
123	OFFICE
124	OFFICE
125	OFFICE
126	OFFICE
127	DIRECTOR
128	HALL
129	CONFERENCE
130	CONFERENCE
131	HALL
132	DIRECTOR
133	HALL
134	MAIL PICK-UP
135	BOOK STORAGE
136	CAMPUS POLICE
137	TOILET ROOM
138	HALL
139	OFFICE
140	OFFICE
141	FIRE SPRINKLER RISER
142	STAFF LOUNGE
143	HALL
144	JANITOR
145	TOILET ROOM
146	ELECT ROOM
147	PATIO
148	NOT USED
149	WATER HEATER ROOM

WALL TYPES

- 8" MASONRY BLOCK WALL
- 6" 1 HR RATED FIRE BARRIER WALL
- 6" 2 HR RATED FIRE BARRIER WALL
- 6" WOOD STUD EXTERIOR WALL
- 6" WOOD STUD INTERIOR WALL

IDENTIFICATION STAMP
DIV. OF THE STATE ARCHITECT
APP: 02-123307 INC:
REVIEWED FOR
SS ☑ FLS ☑ ACS ☑
DATE: 10/15/2025

Owner:

WASHINGTON UNIFIED SCHOOL DISTRICT
6041 SOUTH ELM AVE.
FRESNO, CA 93706

Project Name:

STUDENT SERVICES

Project Address:

WASHINGTON UNION HIGH SCHOOL
6041 SOUTH ELM AVE.
FRESNO, CA 93706

integrated designs
by SOMAM, Inc.

ARCHITECTURE
ENGINEERING
INTERIOR DESIGN

6011 N. FRESNO STREET, SUITE 130
FRESNO CALIFORNIA 93710
P:(559) 436-0881 F:(559) 436-0887
E: design@somam.com
integrateddesigns.com

Ownership of Documents
This document, the ideas and designs incorporated herein, as an instrument of Professional Service is the property of Integrated Designs by SOMAM Inc. and is not to be used, in whole or in part for any other project without written authorization.
© COPYRIGHT 2024

Stamp:

LICENSED ARCHITECT
FELIPE CEBALLOS
No. C 12834
Felipe Ceballos
EXP. 8-31-25
STATE OF CALIFORNIA

Sheet Title:

DIMENSION FLOOR PLAN

Job No.: **5613**

Sheet No.: **A2.01**

Release: DSA SUBMITTAL 04-02-25

G:\2023frs\23-5613 WASHINGTON UNION HIGH SCHOOL - STUDENT SERVICES\Sheets\5613-A2.10 FLOOR PLAN.dwg FRANK AYALA 9/19/25

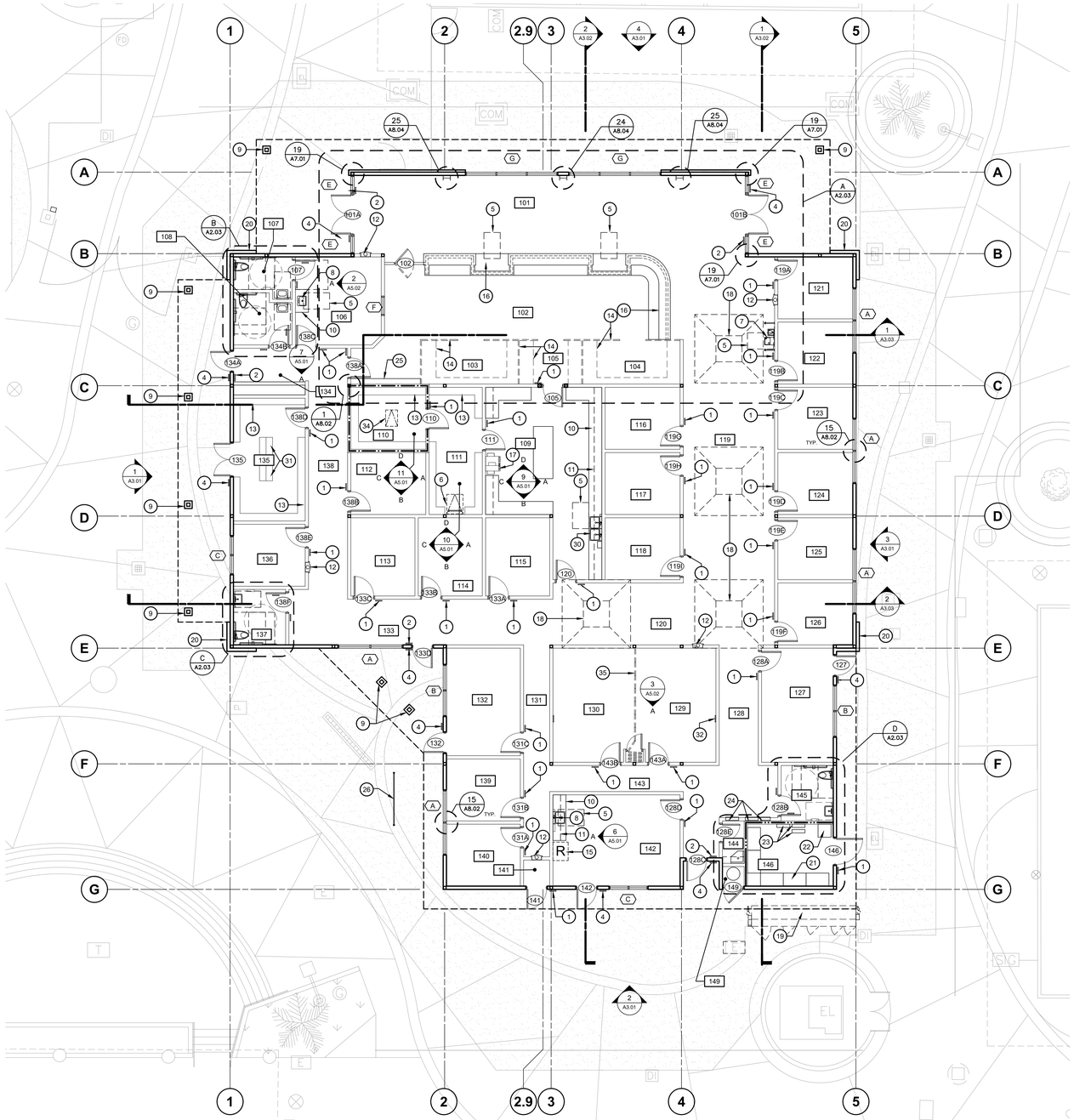

1 A2.02

KEYNOTE FLOOR PLAN

STUDENT SERVICES

SCALE: 1/8" = 1'-0"

KEY NOTES

1. TACTILE ROOM IDENTIFICATION SIGN - SEE DETAIL 19/A8.01.
2. TACTILE EXIT SIGN - SEE DETAIL 22/A8.01.
3. NOT USED.
4. TACTILE BUILDING ENTRANCE SIGNAGE, 8/A8.01.
5. 30"x48" CLEAR FLOOR SPACE.
6. ROOF ACCESS LADDER & ROOF HATCH - SEE DETAILS 5/A8.02 & 3/A7.02.
7. ACCESSIBLE HI / LOW DRINKING FOUNTAIN & BOTTLE FILLER w/ BACKSPLASH - SEE PLUMBING DRAWINGS & 17/A8.02 AND SEE DETAIL 18/A8.02 FOR SUPPORT.
8. SINK & FAUCET - SEE PLUMBING SHEETS.
9. STRUCTURAL COLUMNS. SEE STRUCTURAL DRAWING DETAIL E/S6.01
10. PLASTIC LAM BASE CABINETS - SEE INTERIOR ELEVATIONS.
11. PLASTIC LAM UPPER CABINETS - SEE INTERIOR ELEVATIONS & DETAIL 21/A8.02.
12. RECESSED FIRE EXTINGUISHER CABINET - SEE DETAIL 9/A8.01.
13. STORAGE SHELVING SYSTEM w/ K & V BRACKETS - SEE 25/A8.01.
14. MODULAR OFFICE WALL, DESK, CABINET FILE SYSTEM TO BE PROVIDED BY THE OWNER - INSTALLED BY THE CONTRACTOR.
15. REFRIGERATOR PROVIDED BY OWNER.
16. RECEPTION COUNTER & CABINET - SEE 23 & 24/A8.01.
17. OFFICE EQUIPMENT BY OWNER. SEE ELECTRICAL DRAWINGS.
18. LINE OF SKYLIGHT ABOVE. SEE 8/A7.02.
19. EXISTING SWITCH GEAR TO REMAIN OPERATIONAL UNTIL NEW EQUIPMENT IS INSTALLED.
20. WALL POP-OUT - SEE DETAIL 12/A7.03
21. METER/ FIRE PUMP SECTION AND MAIN CIRCUIT BREAKER SECTION & DISTRIBUTION SECTIONS. SEE ELECTRICAL DRAWINGS.
22. IDF. SEE ELECTRICAL DRAWINGS - SEE DETAIL 1/T3.10.
23. FIRE ALARM EQUIPMENT. SEE ELECTRICAL DRAWINGS SHEET E5.03.
24. FLUSH BLDG PANELS AND FLUSH LIGHTING CONTROL PANEL. SEE ELECTRICAL DRAWING DETAILS 9/E7.01 & 23/A8.02.
25. BROCHURE DISPLAY CABINET. SEE DETAIL 11/A8.01.
26. STAINLESS STEEL, SURFACE MOUNTED WAVE BIKE RACK - SEE DETAIL 14/A1.02.
27. NOT USED.
28. NOT USED.
29. NOT USED.
30. WET BAR SINK & FAUCET - SEE PLUMBING SHEETS.
31. FULL HEIGHT SHELVING, ATTACH TO BLOCKING AT CEILING JOISTS - SEE DETAIL 20/A8.02.
32. ALS AVAILABLE SIGN, PROVIDE PORTABLE ASSISTIVE LISTENING SYSTEM, PER CBC 11B-216.10, 11B-219 AND 11B-706. SEE DETAIL 16/A8.01.
33. NOT USED.
34. CEILING ACCESS PANEL 1HR. - SEE DETAIL 8/8.02.
35. OPERABLE PANEL PARTITION - SEE DETAIL 21/A8.04.

ALS SYSTEM

ASSISTIVE LISTENING SYSTEM (ALS):

1. PROVIDE A SET OF PORTABLE ALS WITH A TRANSMITTER AND A MINIMUM OF TWO HEARING-AID COMPATIBLE RECEIVERS.

   PER CBC 2019, 11B-219.
   438 S.F. / 15 (OCCUPANT LOAD) = 29.2
   29.2 x 4% = 1.17 ALS DEVICES REQUIRED (OR 2 MIN.).
2. THE SYSTEM SHALL BE STORE IN THE SCHOOL ADMINISTRATION OFFICE UNTIL REQUESTED FOR USE.
3. SPECIFY THE ALS TYPE AND THAT THE SYSTEM SHALL BE CAPABLE OF INTERFACING WITH THE VOCE AMPLIFICATION SYSTEMS AND ANY MEDIA PROGRAM AUDI SYSTEM INSTALLED, AND SHALL COMPLY WITH CBC SECTIONS 11B-219 AND 11B-706.
4. SYSTEM SHALL INCLUDE: ANCHOR AUDIOASSISTIVE LISTENING PACKAGE #AL-9000: 16 CHANNEL TRANSMITTER, DC POWER SUPPLY, 4 BELT PACK RECEPTACLES WITH EAR BUDS, AND 2 NECK LOOPS, WIRELESS MICROPHONE & BATTERY CHARGER, OR EQUAL..

ROOM NAMES

101	LOBBY
102	CIVIC ADMINISTRATION
103	ADMIN
104	ADMIN
105	HALL
106	NURSE
107	TOILET ROOM
108	TOILET ROOM
109	WORKING ROOM
110	ARCHIVE STORAGE
111	PAPER STORAGE
112	OFFICE
113	OFFICE
114	OFFICE
115	OFFICE
116	OFFICE
117	OFFICE
118	OFFICE
119	WAITING ROOM
120	WAITING ROOM
121	OFFICE
122	OFFICE
123	OFFICE
124	OFFICE
125	OFFICE
126	OFFICE
127	DIRECTOR
128	HALL
129	CONFERENCE
130	CONFERENCE
131	HALL
132	DIRECTOR
133	HALL
134	MAIL PICK-UP
135	BOOK STORAGE
136	CAMPUS POLICE
137	TOILET ROOM
138	HALL
139	OFFICE
140	OFFICE
141	FIRE SPRINKLER RISER
142	STAFF LOUNGE
143	HALL
144	JANITOR
145	TOILET ROOM
146	ELECT ROOM
147	PATIO
148	NOT USED
149	WATER HEATER ROOM

WALL TYPES

- 8-INCH ADOBE WALL
- 6-INCH 1 HR RATING FIRE WALL- SEE DETAIL 24/A8.02 SIMILAR
- 6-INCH 2 HR RATING FIRE WALL- SEE DETAIL 14/A8.02
- 6-INCH WOOD STUD EXTERIOR WALL
- 6-INCH WOOD STUD INTERIOR WALL

GENERAL NOTES

A. DIMENSIONS ARE GIVEN TO FACE OF STUD UNLESS NOTED OTHERWISE.

B. DIMENSIONS FOR ACCESSIBILITY COMPLIANCE ARE GIVEN FROM CENTERLINE OR FACE OF FIXTURE / ACCESSORY TO FACE OF FINISH OR ADJACENT FIXTURE/ACCESSORY.

C. SEE DETAILS SHEET A8.01 FOR MOUNTING HEIGHT AND CLEARANCE REQUIREMENTS AT ALL TOILET ROOM ACCESSORIES AND ACCESSIBLE FIXTURES: WATER CLOSETS, LAVATORIES, DRINKING FOUNTAINS, ETC.

D. SEE MATERIAL & FINISH SCHEDULE ON SHEET A0.01 FOR MATERIAL & FINISH SELECTIONS.

E. SEE STRUCTURAL DRAWINGS FOR TYPICAL WOOD FRAMING CONSTRUCTION DETAILS

F. ALL INSULATION AT EXTERIOR WALLS SHALL BE R-19 INSULATION. INSULATION AT ROOF SHALL BE R-38 FOIL-FACT F.G. BATT INSULATION INSTALLED. ALL INTERIOR WALLS SHALL RECEIVE ACOUSTIC BATT INSULATION.

G. NEW BUILDINGS SHALL BE PROVIDED WITH EMERGENCY RESPONDER RADIO COVERAGE IN ACCORDANCE WITH CALIFORNIA FIRE CODE SECTION 510. THE PROJECT ARCHITECT (AOR) SHALL CONTACT THE LOCAL FIRE DEPARTMENT AND / OR EMERGENCY COMMUNICATIONS AUTHORITY TO OBTAIN DESIGN, EQUIPMENT SPECIFICATIONS, TESTING AND ACCEPTANCE CRITERIA, PLANS AND REQUESTED DOCUMENTATION SHALL BE SUBMITTED TO THE LOCAL AUTHORITY HAVING JURISDICTION FOR REVIEW AND APPROVAL. UPON COMPLETION, COPIES OF THE APPROVED PLANS, EQUIPMENT DATA SHEETS, TESTING AND ACCEPTANCE DOCUMENTATION SHALL BE PROVIDED TO THE SCHOOL DISTRICT.

IDENTIFICATION STAMP
DIV. OF THE STATE ARCHITECT
APP: 02-123307 INC:
REVIEWED FOR
SS ☑ FLS ☑ ACS ☑
DATE: 10/15/2025

Owner:

WASHINGTON UNIFIED SCHOOL DISTRICT

WASHINGTON UNIFIED SCHOOL DISTRICT
7950 SOUTH ELM AVE.
FRESNO, CA 93706

Project Name:

STUDENT SERVICES

Project Address:

WASHINGTON UNION HIGH SCHOOL
6041 SOUTH ELM AVE.
FRESNO, CA 93706

integrated designs
by SOMAM, Inc.

ARCHITECTURE ENGINEERING INTERIOR DESIGN

6011 N. FRESNO STREET, SUITE 130
FRESNO CALIFORNIA 93710
P:(559) 436-0881 F:(559) 436-0887
E: design@somam.com
integrateddesigns.com

Ownership of Documents

This document, the ideas and designs incorporated herein, as an instrument of Professional Service is the property of Integrated Designs by SOMAM Inc. and is not to be used, in whole or in part for any other project without written authorization.

© COPYRIGHT 2024

Stamp:

LICENSED ARCHITECT FELIPE CEBALLOS No. C 12834 CA 8-31-26 STATE OF CALIFORNIA

Sheet Title:

KEYNOTE FLOOR PLAN

Job No.: **5613**

Sheet No.: **A2.02**

Release: DSA SUBMITTAL 04-02-25

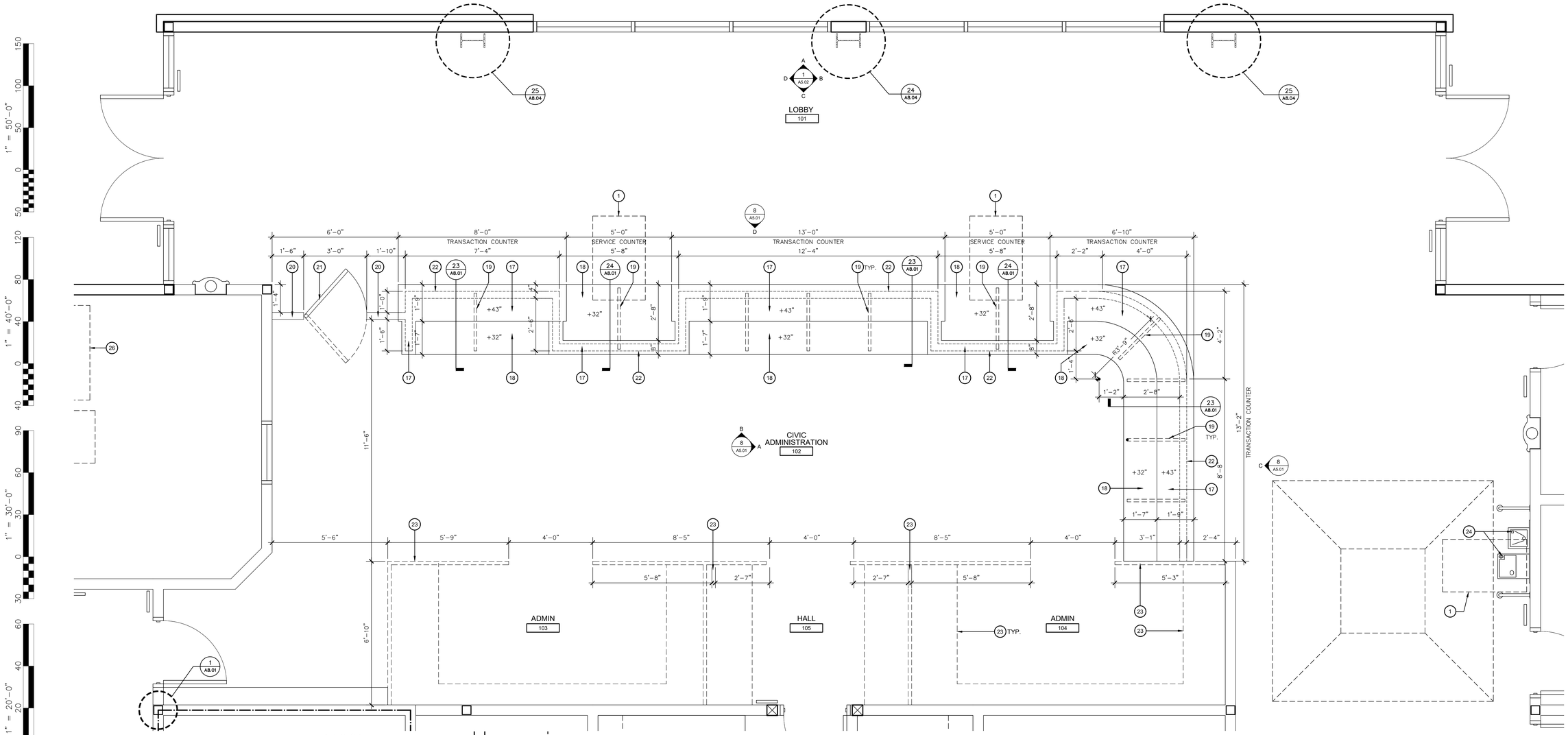

A **ENLARGED FLOOR PLAN** 101 102

STUDENT SERVICES SCALE: 1/2" = 1'-0"

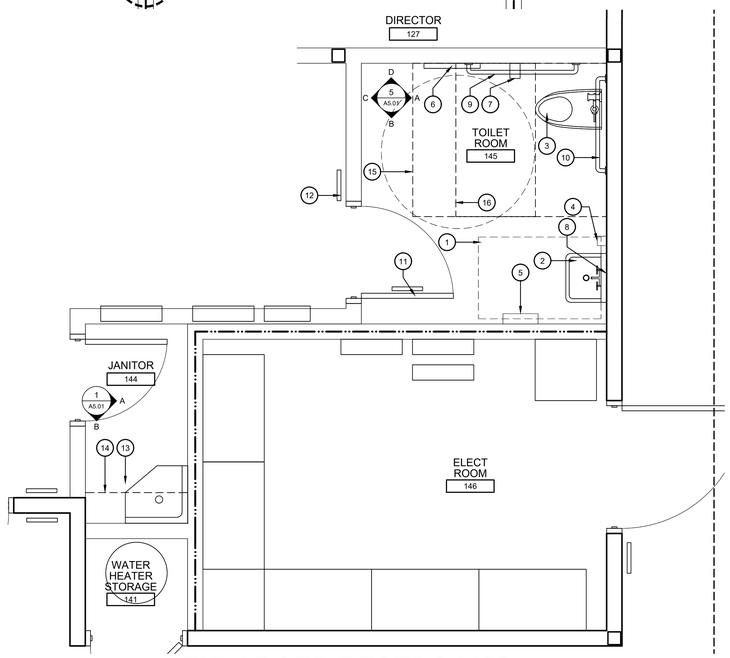

D **ENLARGED RESTROOMS** 145

STUDENT SERVICES SEE 1/A8.01 FOR ADA REQUIREMENTS SCALE: 1/2" = 1'-0"

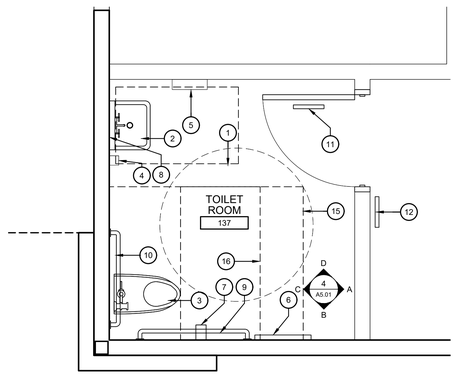

C **ENLARGED RESTROOMS** 137

STUDENT SERVICES SEE 1/A8.01 FOR ADA REQUIREMENTS SCALE: 1/2" = 1'-0"

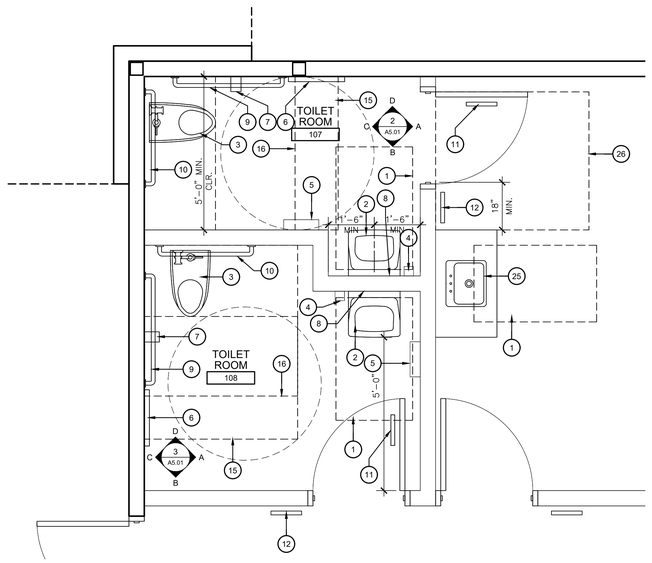

B **ENLARGED RESTROOMS** 107 108

STUDENT SERVICES SEE 1/A8.01 FOR ADA REQUIREMENTS SCALE: 1/2" = 1'-0"

KEY NOTES

1. 30"x48" CLEAR FLOOR SPACE
2. ACCESSIBLE LAVATORY - SEE PLUMBING DRAWINGS AND DETAIL 10/A8.01.
3. ACCESSIBLE WATER CLOSET - SEE PLUMBING DRAWINGS AND DETAIL 3/A8.01 FOR ACCESSIBILITY REQUIREMENTS.
4. SOAP DISPENSER SD-1 - SEE DETAIL 4/A8.01.
5. PAPER TOWEL DISPENSER TD-1 - SEE DETAIL 4/A8.01.
6. TOILET SEAT COVER DISPENSER SC-1 - SEE DETAIL 3/A8.01.
7. TOILET PAPER DISPENSER TP-1 - SEE DETAIL 3/A8.01.
8. MIRROR MIR-1 - SEE DETAILS 4/A8.01 AND 25/A8.02.
9. 48" LONG GRAB BAR GB-2 - SEE DETAIL 3/A8.01.
10. 36" LONG GRAB BAR GB-1 - SEE DETAIL 3/A8.01.
11. ACCESSIBLE TOILET ROOM DOOR SYMBOL - SEE DETAIL 2/A8.01.
12. RESTROOM IDENTIFICATION SIGN - SEE DETAIL 2/A8.01.
13. JAN. FLOOR MOP SINK - SEE PLUMBING DRAWINGS.
14. JANITOR SHELF w/ MOP & BROOM HOLDER - SEE DETAIL 17/A8.01.
15. 48"x60" MANEUVERING SPACE.
16. 59"x60" WATER CLOSET CLEARANCE AREA.
17. 43" H TRANSACTION COUNTER- SEE DETAIL 23/A8.01.
18. 32" H SERVICE COUNTER- SEE DETAIL 24/A8.01.
19. ANGLE BRACKET BELOW- SEE DETAIL 23 AND 24/A8.01.
20. 2x4 WOOD WALL W/ PLASTIC LAMINATE PANELS. SEE STRUCTURAL DRAWING 13/S1.01 FOR ANCHORAGE.
21. 3'-0"x 2'-6" WOOD SWING DOOR W/ PLASTIC LAMINATE PANEL- SEE INTERIOR ELEVATIONS A5.01.
22. 2X4 UNDER COUNTER WOOD WALL. SEE STRUCTURAL DRAWING 13/S1.01 FOR ANCHORAGE
23. MODULAR OFFICE WALL, DESK, CABINET FILE SYSTEM TO BE PROVIDED BY THE OWNER - INSTALLED BY THE CONTRACTOR.
24. ACCESSIBLE HI / LOW DRINKING FOUNTAIN & BOTTLE FILLER w/ BACKSPLASH - SEE PLUMBING DRAWINGS & DETAILS 17/A8.02 AND 18/A8.02.
25. ACCESSIBLE LAVATORY- SEE DETAIL 7/A8.01.
26. 60"x54" MANEUVERING SPACE.

IDENTIFICATION STAMP
DIV. OF THE STATE ARCHITECT
APP: 02-123307 INC:
REVIEWED FOR
SS ☑ FLS ☑ ACS ☑
DATE: 10/15/2025

Owner:

WASHINGTON UNIFIED SCHOOL DISTRICT
7950 SOUTH ELM AVE.
FRESNO, CA 93706

Project Name:

STUDENT SERVICES

Project Address:

WASHINGTON UNION HIGH SCHOOL
6041 SOUTH ELM AVE.
FRESNO, CA 93706

integrated designs
by SOMAM, Inc.

ARCHITECTURE ENGINEERING INTERIOR DESIGN

6011 N. FRESNO STREET, SUITE 130
FRESNO CALIFORNIA 93710
P:(559) 436-0881 F:(559) 436-0887
E: design@somam.com
integrateddesigns.com

Ownership of Documents
This document, the ideas and designs incorporated herein, as an instrument of Professional Service is the property of Integrated Designs by SOMAM Inc. and is not to be used, in whole or in part for any other project without written authorization.
© COPYRIGHT 2024

Stamp:

LICENSED ARCHITECT · No. C 12834 · REN. 8-31-25 · STATE OF CALIFORNIA

Sheet Title:

ENLARGED FLOOR PLAN

Job No.: **5613**

Sheet No.: **A2.03**

Release: DSA SUBMITTAL 04-02-25

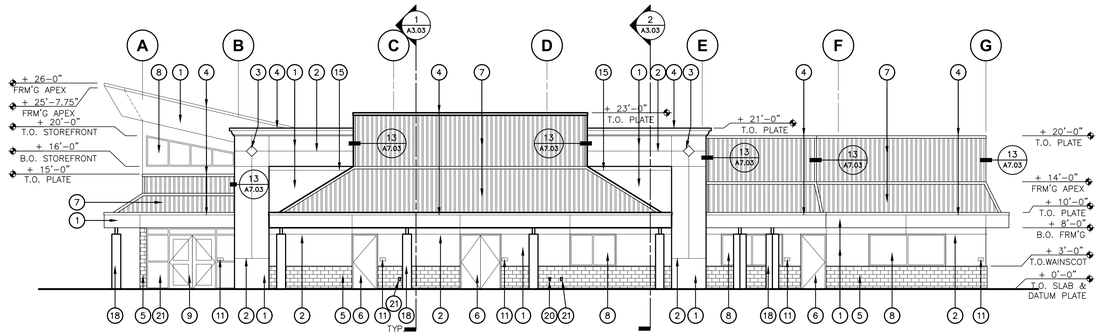

1 WEST ELEVATION
1/4" = 1'-0"

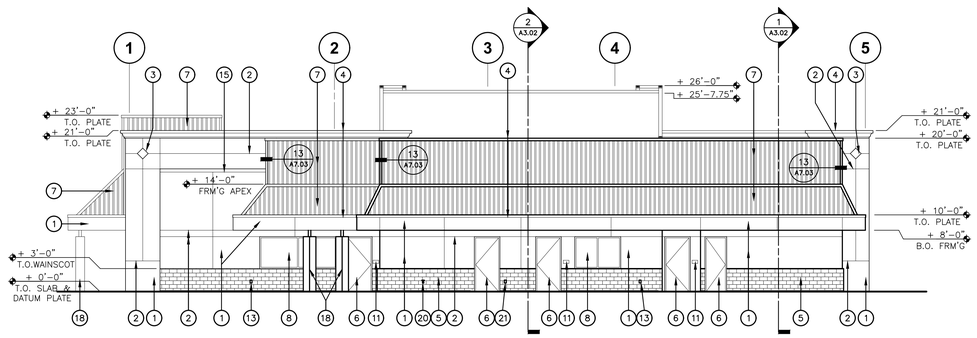

2 SOUTH ELEVATION
1/8" = 1'-0"

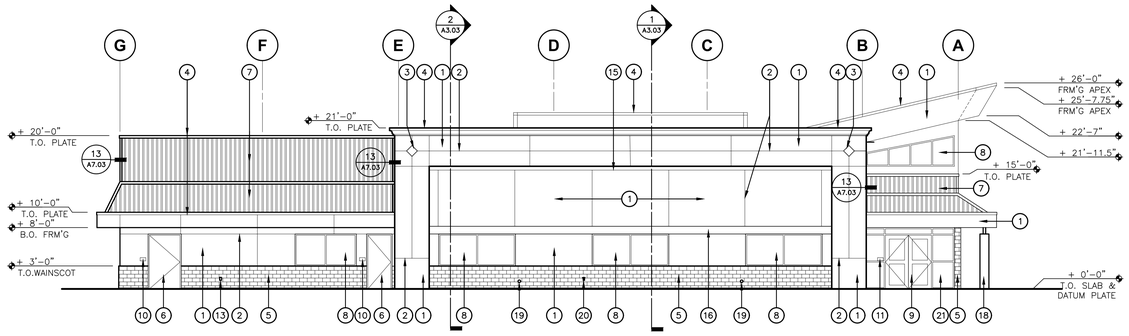

3 EAST ELEVATION
1/4" = 1'-0"

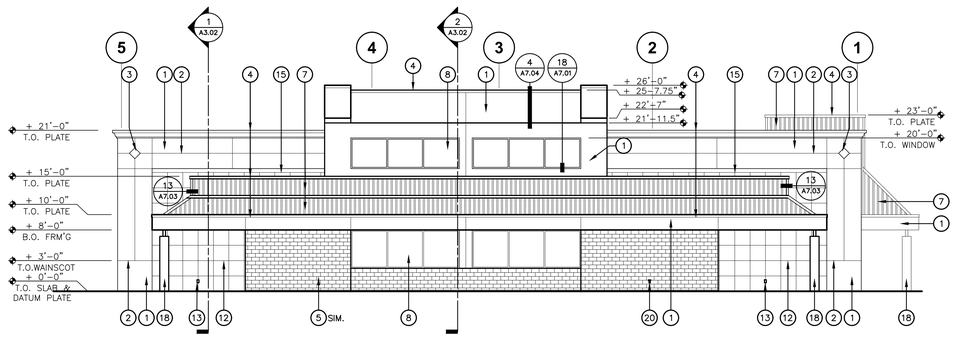

4 NORTH ELEVATION
1/8" = 1'-0"

KEY NOTES

1. CEMENT PLASTER SYSTEM, - PRIME & PAINT.
2. CEMENT PLASTER CONTROL / EXPANSION JOINTS - TYPE #5- SEE 9/A7.01.
3. PAINTED CEMENT PLASTER COLOR ACCENT DIAMOND - 9/A7.03.
4. 24 GA. PRE FINISHED SHEET METAL COPING.
5. ADOBE MASONRY ADHERED VENEER. SEE 1, 2, 6, 7 & 17/A7.01.
6. EXTERIOR HOLLOW MTL DOOR & FRAME. SEE DOOR SCHEDULE A0.01.
7. PRE-FINISHED BOX RIB METAL PANEL SYSTEM BY AEP SPAN. SEE DETAIL 9/A7.02, 13 AND 14/A7.03.
8. HOLLOW METAL WINDOW FRAMES. SEE WINDOW SCHEDULE A0.01.
9. HOLLOW METAL STOREFRONT DOUBLE SWING DOOR. SEE DOOR SCHEDULE A0.01.
10. ROOM IDENTIFICATION SIGN - SEE DETAIL 19/A8.01.
11. BUILDING ENTRANCE SIGN - SEE DETAIL 8/A8.01.
12. EXTERIOR CERAMIC TILE- SEE DETAIL 18/A8.04 .
13. WEATHERPROOF RECEPTACLE- SEE ELECTRICAL SHEET E2.10.
14. ALUMINUM ROLLING GRILLE ROLL-UP DOOR. SEE DOOR SCHEDULE A0.01.
15. 6" CEMENT PLASTER SCREED TYPE 9, SEE 9/A7.01 AND 10/A7.03.
16. 6" RADIUS E.I.F.S SHAPE WITH CEMENT PLASTER FINISH. SEE 11/A7.04.
17. NOT USED.
18. CONCRETE COLUMN BASE- SEE DETAIL E/S6.01.
19. OVERFLOW DRAIN OUTLET.
20. HOSE BIB- SEE PLUMBING SHEET P1.0.
21. ALUMINUM STOREFRONT, SEE WINDOW SCHEDULE ON SHEET A0.01

GENERAL NOTES

1. GENERAL CONTRACTOR SHALL CUT ALL WELDED WIRE LATH AT ALL EXPANSION JOINTS WHERE OCCURS.
2. PLASTER SHALL HAVE AN INTERGAL COLOR TO MATCH EXISTING BUILDINGS.
3. ALL SHEET METAL COPING SHALL BE INSTALLED w/ S.S. WOOD SCREWS.
4. ALL PLASTER FINISH SHALL HAVE AN INTEGRAL COLOR
5. ALL CEMENT PLASTER CONTROL JOINTS NOT SHOWN. FOR REMAINING REQUIRED JOINTS PER SPECIFICATIONS, USE SINGLE POINT CONTROL JOINT TYPE 6 ON SHEET 9/A7.01.
6. THERE SHALL BE A MIN. OF 3 PAINT COLORS THAT WILL BE SELECTED FOR THE PROJECT
7. ALL METAL LATH WIRE SHALL BE CUT BEHIND ALL EXPANSION / CONTROL JOINTS. THE CONTRACTOR SHALL PROVIDE STUDS AS REQUIRED @ ALL JOINTS
8. ALL EXTERIOR GLASS SEE WINDOW ELEVATIONS AND SCHEDULE
9. HOLLOW METAL FRAMES & DOORS WILL BE PAINTED WITH A MIN. OF 2 COLORS

   1) EXTERIOR SURFACE: 1. COLOR
   2) INTERIOR SURFACE: 2. COLORS
      A) JAMB
      B) DOOR

IDENTIFICATION STAMP
DIV. OF THE STATE ARCHITECT
APP: 02-123307 INC:
REVIEWED FOR
SS ☑ FLS ☑ ACS ☑
DATE: 10/15/2025

Owner:

WASHINGTON UNIFIED SCHOOL DISTRICT

WASHINGTON UNIFIED SCHOOL DISTRICT
7950 SOUTH ELM AVE.
FRESNO, CA 93706

Project Name:

STUDENT SERVICES

Project Address:

WASHINGTON UNION HIGH SCHOOL
6041 SOUTH ELM AVE.
FRESNO, CA 93706

integrated designs
by SOMAM, Inc.

ARCHITECTURE
ENGINEERING
INTERIOR DESIGN

6011 N. FRESNO STREET, SUITE 130
FRESNO CALIFORNIA 93710
P:(559) 436-0881 F:(559) 436-0887
E: design@somam.com
integrateddesigns.com

Ownership of Documents
This document, the ideas and designs incorporated herein, as an instrument of Professional Service is the property of Integrated Designs by SOMAM Inc. and is not to be used, in whole or in part for any other project without written authorization.
© COPYRIGHT 2024

Stamp:

LICENSED ARCHITECT — FELIPE CEBALLOS — No. C 12834 — 8-31-27 — STATE OF CALIFORNIA

Sheet Title:

EXTERIOR ELEVATIONS

Job No.: **5613**

Sheet No.: **A3.01**

Release: DSA SUBMITTAL 04-02-25

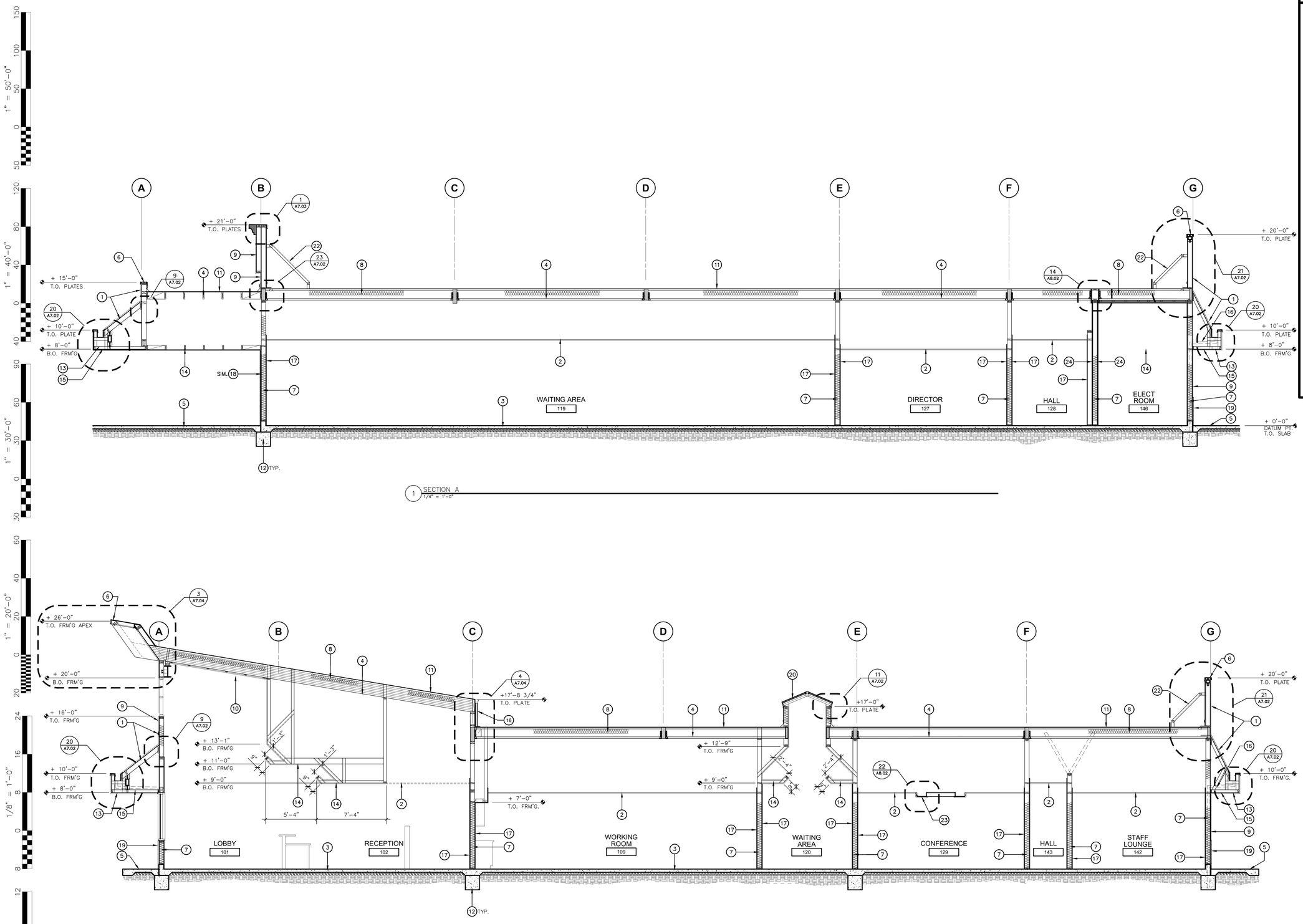

KEY NOTES

1. PRE-FINISH BOX RIB METAL PANEL SYSTEM BY AEP SPAN o/ UNDERLAYMENT (CLASS 'A' ROOF). SEE ROOF PLAN & SHEET A7.03 FOR FLASHING & ATTACHMENT DETAILS.
2. CEILING SYSTEM - SEE SHEET A6.01 REFLECTED CEILING PLAN.
3. CONCRETE SLAB AND FOUNDATION SYSTEM. SEE STRUCTURAL DRAWINGS- SHEET S2.01 FOR ADDITIONAL INFORMATION.
4. ROOF FRAMING - SEE STRUCTURAL DRAWINGS- SHEET S2.03.
5. CONCRETE WALK.
6. 22 GA. PRE-FINISHED SHEET METAL COPING.
7. R-19 BATT INSULATION, TYP..
8. R-38 BATT INSULATION INSTALLED BETWEEN I-JOISTS AND SUPPORTED BY STAY-WIRES @ 12" O.C., TYP.
9. CEMENT PLASTER SYSTEM, PRIME & PAINT.
10. 2'x4' TECTUM ACOUSTICAL PANELS.
11. SINGLE-PLY CLASS A ROOF SYSTEM OVER SHAPED RIGID INSULATION (TPO)
12. CONCRETE FOOTING. SEE STRUCTURAL DRAWINGS- SHEET S2.01.
13. CONT. 4" VENT SCREED TYP. SEE 12/A7.02.
14. CEILING JOIST. SEE STRUCTURAL DRAWINGS.
15. SOFFIT FRAMING. SEE DETAIL 20/A7.02 & STRUCTURAL DETAILS A, B AND C/S6.04.
16. GUTTER DOWNSPOUT. SEE ROOF PLAN A4.01 & RCP A6.01.
17. INTERIOR FINISH - SEE A0.01 SCHEDULES.
18. ADOBE CONCRETE BLOCK VENEER.
19. ADOBE CONCRETE BLOCK VENEER WAINSCOT. SEE EXTERIOR. ELEVATIONS A3.01.
20. SKYLIGHT - SEE SPECS & 11/A7.02.
21. (N) 6'-0" HT. MASONRY BLOCK WALL w/ ADHERED ADOBE VENEER- SEE DETAIL 20/A7.03.
22. PARAPET BRACING- SEE STRUCTURAL DRAWINGS.
23. LIGHT FIXTURE WOOD SURROUND - SEE DETAIL 16/A7.03.
24. 2-HR. FIRE RATED WALL - SEE DETAIL 14/A8.02

IDENTIFICATION STAMP
DIV. OF THE STATE ARCHITECT
APP: 02-123307 INC:
REVIEWED FOR
SS ☑ FLS ☑ ACS ☑
DATE: 10/15/2025

Owner:
WASHINGTON UNIFIED SCHOOL DISTRICT

WASHINGTON UNIFIED SCHOOL DISTRICT
7950 SOUTH ELM AVE.
FRESNO, CA 93706

Project Name:
STUDENT SERVICES

Project Address:
WASHINGTON UNION HIGH SCHOOL
6041 SOUTH ELM AVE.
FRESNO, CA 93706

integrated designs
by SOMAM, Inc.

ARCHITECTURE ENGINEERING INTERIOR DESIGN

6011 N. FRESNO STREET, SUITE 130
FRESNO CALIFORNIA 93710
P:(559) 436-0881 F:(559) 436-0887
E: design@somam.com
integrateddesigns.com

Ownership of Documents
This document, the ideas and designs incorporated herein, as an instrument of Professional Service is the property of Integrated Designs by SOMAM Inc. and is not to be used, in whole or in part for any other project without written authorization.
© COPYRIGHT 2024

Stamp:
LICENSED ARCHITECT FELIPE CEBALLOS No. C 12834 REN. 8-31-27 STATE OF CALIFORNIA

Sheet Title:
SECTIONS

Job No.:
5613

Sheet No.:
A3.02

Release: DSA SUBMITTAL 04-02-25

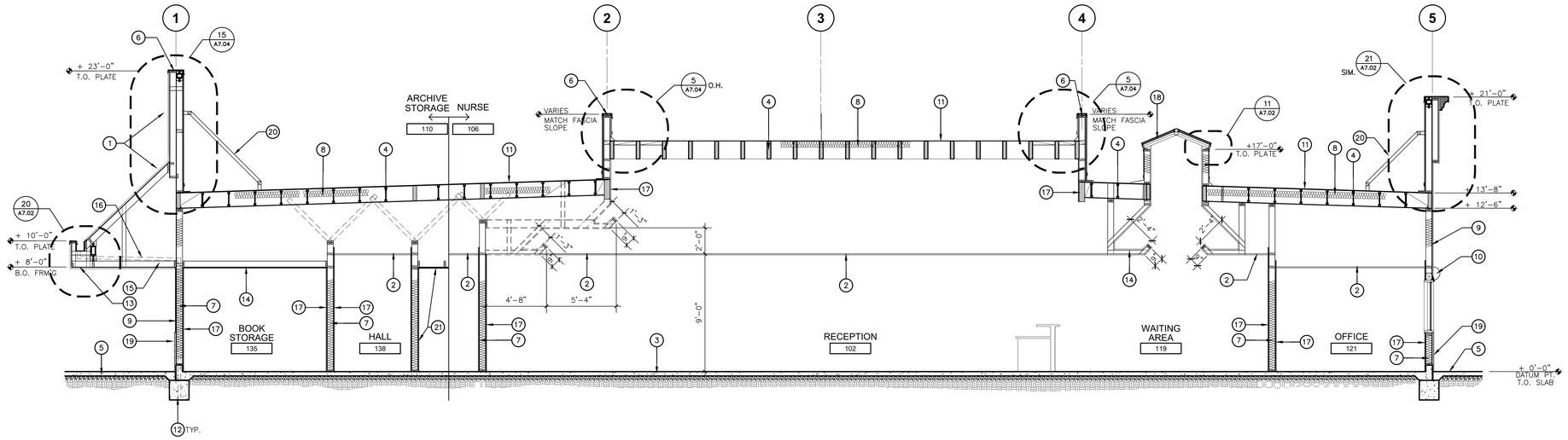

1 SECTION C
1/4" = 1'-0"

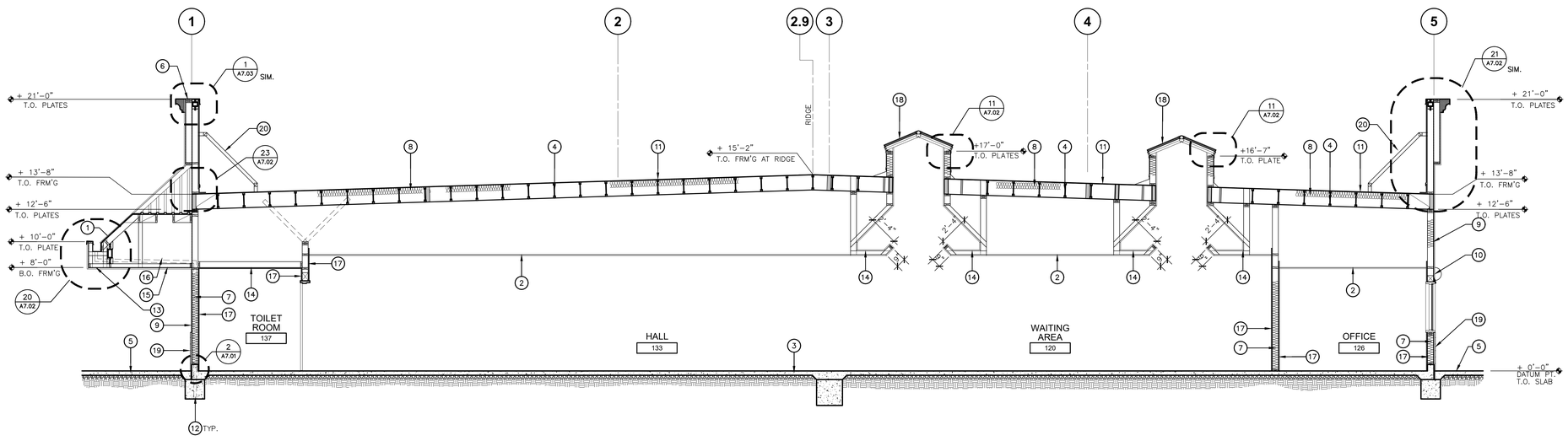

2 SECTION D
1/4" = 1'-0"

KEY NOTES

1. PRE-FINISH BOX RIB METAL PANEL SYSTEM BY AEP SPAN o/ UNDERLAYMENT (CLASS 'A' ROOF). SEE ROOF PLAN & SHEET A7.03 FOR FLASHING & ATTACHMENT DETAILS.
2. CEILING SYSTEM - SEE SHEET A6.01 REFLECTED CEILING PLAN.
3. CONCRETE SLAB AND FOUNDATION SYSTEM. SEE STRUCTURAL DRAWINGS- SHEET S2.01 FOR ADDITIONAL INFORMATION.
4. ROOF FRAMING - SEE STRUCTURAL DRAWINGS- SHEET S2.03.
5. CONCRETE WALK.
6. 22 GA. PRE-FINISHED SHEET METAL COPING.
7. R-19 BATT INSULATION, TYP.
8. R-38 BATT INSULATION INSTALLED BETWEEN I-JOISTS AND SUPPORTED BY STAY WIRES @ 12" O.C., TYP.
9. CEMENT PLASTER SYSTEM, PRIME & PAINT.
10. 6" RADIUS PRECAST HALF ROUND MOULDINGS- SEE 9/A7.03
11. SINGLE-PLY CLASS A ROOF SYSTEM OVER SHAPED RIGID INSULATION (TPO)
12. CONCRETE FOOTING, SEE STRUCTURAL DRAWINGS- SHEET S2.01.
13. CONT. 4" VENT SCREED TYP. SEE 12/A7.02.
14. 2x CEILING JOIST. SEE STRUCTURAL DRAWINGS.
15. SOFFIT FRAMING. SEE DETAIL 20/A7.02 & STRUCTURAL DETAILS A,B & C/S6.04.
16. GUTTER DOWNSPOUT. SEE ROOF PLAN A4.01 & RCP A6.01.
17. INTERIOR FINISH - SEE A0.01 SCHEDULES.
18. SKYLIGHT - SEE SPECS & 11/A7.02.
19. ADOBE CONCRETE VENEER WAINSCOT. SEE EXTERIOR. ELEVATIONS A3.01.
20. PARAPET BRACING- SEE STRUCTURAL DRWGS.
21. 1HR. FIRE RATED WALL & CEILING AT ROOM 110 - SEE DETAILS 24//A8.02 AND 19/A8.02.

IDENTIFICATION STAMP
DIV. OF THE STATE ARCHITECT
APP: 02-123307 INC:
REVIEWED FOR
SS ☑ FLS ☑ ACS ☑
DATE: 10/15/2025

Owner:
WASHINGTON UNIFIED SCHOOL DISTRICT

WASHINGTON UNIFIED SCHOOL DISTRICT
7950 SOUTH ELM AVE.
~~BIDDING/CONSTRUCTION~~ PERMITTING

Project Name:
STUDENT SERVICES

Project Address:
WASHINGTON UNION HIGH SCHOOL
6041 SOUTH ELM AVE.
FRESNO, CA 93706

integrated designs
by SOMAM, Inc.

ARCHITECTURE
ENGINEERING
INTERIOR DESIGN

6011 N. FRESNO STREET, SUITE 130
FRESNO CALIFORNIA 93710
P:(559) 436-0881 F:(559) 436-0887
E: design@somam.com
integrateddesigns.com

Ownership of Documents
This document, the ideas and designs incorporated herein, as an instrument of Professional Service is the property of Integrated Designs by SOMAM Inc. and is not to be used, in whole or in part for any other project without written authorization.
© COPYRIGHT 2024

Stamp:
LICENSED ARCHITECT FELIPE CEBALLOS No. C 12834 REN. 8-31-27 STATE OF CALIFORNIA

Sheet Title:
SECTIONS

Job No.:
5613

Sheet No.:
A3.03

Release: DSA SUBMITTAL 04-02-25

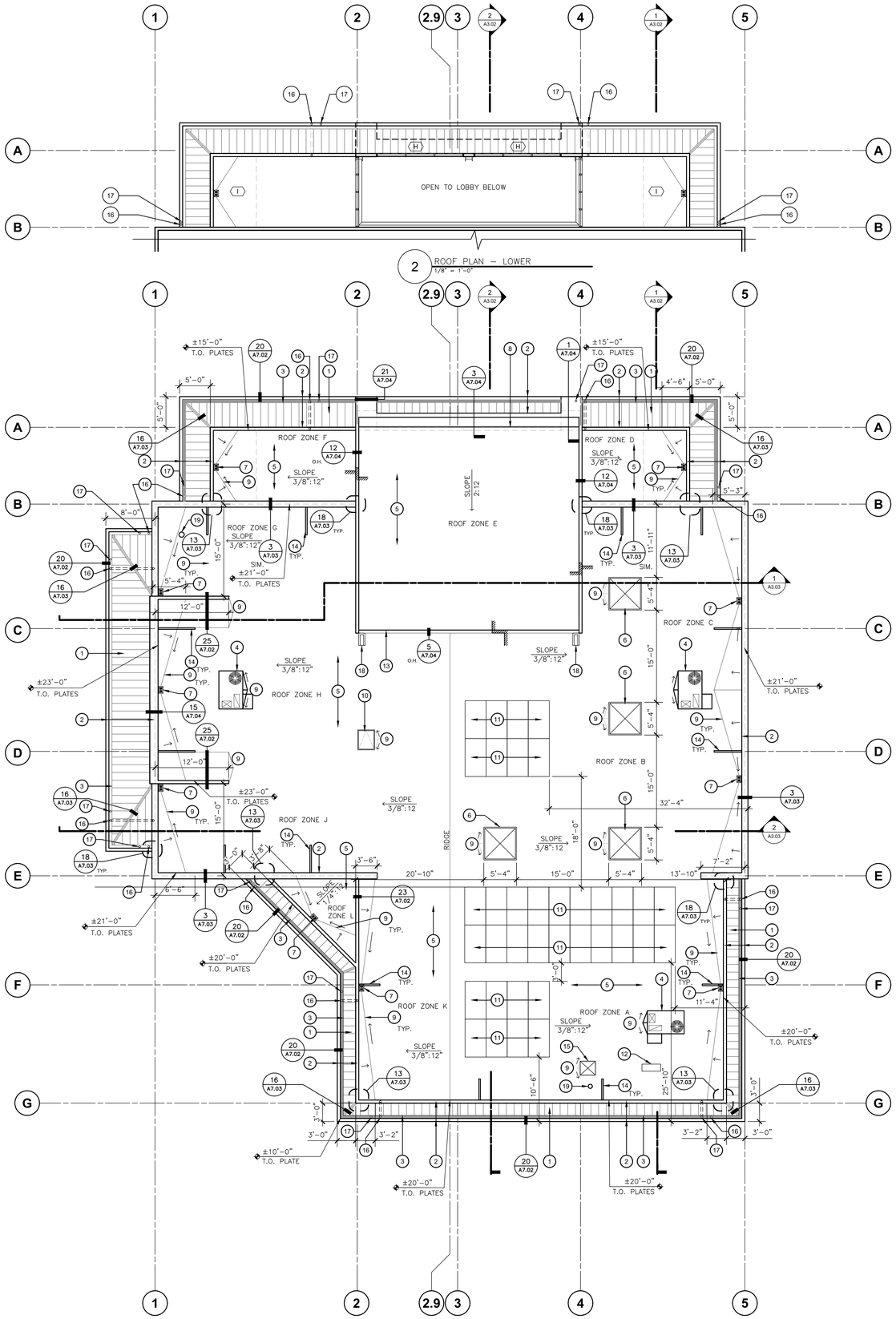

2 ROOF PLAN – LOWER
1/8" = 1'-0"

ROOF PLAN

STUDENT SERVICES

SCALE: 1/8" = 1'-0"

KEY NOTES

1. PRE-FINISH BOX RIB METAL PANELS SYSTEM - SEE DETAILS 6, 9, 16, 20, 21, 25/A7.02 AND DETAILS 13, 14/A7.03. SEE SPECIFICATION SECTION 074113.
2. PRE-FINISHED SHEET METAL COPING
3. PRE-FINISHED BUILT-IN SHEET METAL GUTTER. CONNECT GUTTER TO DOWN SPOUT, RUN DOWN INSIDE OF WALL, CONNECT TO STORM DRAIN.
4. MECHANICAL UNIT ON CURB - SEE MECHANICAL DRAWINGS - SEE A/A7.02
5. SINGLE-PLY CLASS A ROOF SYSTEM OVER PLYWOOD SHEATHING. SEE SPECIFICATION SECTION 075419.
6. SKYLIGHT, - SEE SPECS & 11/A7.02
7. ROOF DRAIN AND OVERFLOW DRAIN - SEE DETAILS 4 & 10/A7.02 AND PLUMBING DRAWINGS.
8. LINE OF BUILDING WALL BELOW.
9. CRICKET SLOPE 1/2" PER FOOT, TYP. - SEE 15/A7.03.
10. ROOF ACCESS HATCH - SEE 3/A7.02.
11. SOLAR PANELS - SEE ELECTRICAL DRAWINGS SHEET E2.20.
12. ODU UNIT ON CURB - PER STRUCTURAL DETAIL 9/S1.03.
13. PRE-FINISHED SHEET METAL GUTTER. SEE 16/A7.04.
14. PARAPET BRACING - SEE STRUCTURAL DRAWINGS M/S6.03.
15. NEW ROOF TOP TRANSFORMER- PER ELECTRICAL DETAIL 11/E7.01.
16. DRAIN INLET IN GUTTER . CONNECT TO STORM DRAIN SYSTEM. SEE DETAIL 20/A7.02.
17. GUTTER OVERFLOW DRAIN. SEE DETAIL 20/A7.02.
18. CONC. SPLASH
19. EXHAUST FAN- SEE MECHANICAL DRAWINGS.

GENERAL NOTES

A. CONTRACTOR TO ESTABLISH AND VERIFY QUANTITIES & DIMENSIONS IN FIELD.

B. CONTRACTOR SHALL VERIFY ALL CONDITIONS PRIOR TO PROCEEDING WITH ANY WORK. CONTRACTOR SHALL IMMEDIATELY NOTIFY ARCHITECT OF ANY EXISTING CONDITIONS WHICH MAY CONFLICT WITH INFORMATION PROVIDED IN CONSTRUCTION DOCUMENTS.

C. ALL NEW SHEET METAL SHALL BE SHOP PRIMED & FIELD PAINTED IN ACCORDANCE SPECIFICATIONS.

D. CONTRACTOR SHALL BE RESPONSIBLE FOR PROVIDING PROPER WATER TIGHT FLASHING AROUND ALL ROOF PENETRATIONS, PER SMACNA STANDARDS.

E. ALL DOWN SPOUTS AND OVERFLOW DRAINS SHALL BE CAST IRON PIPE.

F. ALL ROOF DRAINS SHALL RUN WITHIN A WALL AND CONNECT TO STORM DRAIN LINE. OVERFLOW SHALL DRAIN TO DAYLIGHT THROUGH BOTTOM OF SOFFIT.

G. ALL ROOF PENETRATIONS SHALL BE WEATHER TIGHT.

H. SEE DETAILS 6, 9, 16, 20, 21 AND 25/A7.02 FOR PRE-FINISH BOX RIB METAL PANELS SYSTEM.

ROOF DRAIN CALCS

ROOF ZONE	ZONE SQ. FT.	MAXIMUM ALLOWED AREA
'A'	1,620	*1,644 WITH 3" PIPE
'B'	1,370	*1,644 WITH 3" PIPE
'C'	1,087	*1,644 WITH 3" PIPE
'D'	219	*1,644 WITH 3" PIPE
'E'	1,539	*1,644 WITH 3" PIPE
'F'	296	*1,644 WITH 3" PIPE
'G'	514	*1,644 WITH 3" PIPE
'H'	1,436	*1,644 WITH 3" PIPE
'J'	707	*1,644 WITH 3" PIPE
'K'	622	*1,644 WITH 3" PIPE
'L'	104	*1,644 WITH 3" PIPE

* BASED ON 1.24" PER HOUR RAINFALL RATE FOR A 100 YEAR RETURN PERIOD RAINFALL IN FRESNO, CALIFORNIA WITH HORIZONTAL PIPING TO BE A 1/8" / 12" MINIMUM SLOPE. TABLES 1103.1 AND 1103.2 FROM THE CALIFORNIA PLUMBING CODE

ATTIC VENT CALCS

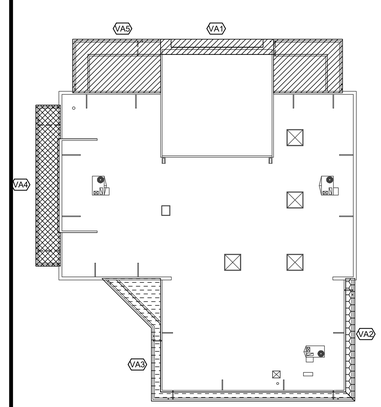

VA1 UPPER ROOF SOFFIT AREA NOT REQUIRED

VA2 SOFFIT AREA = 115 S.F. (1 AREA TYP.)
VENT AREA REQUIRED 115S.F. / 150 = .77 S.F.
SOFFIT VENT: 416" x 3" = 1,248 SQ IN = 9 S.F.

.77 S.F. REQUIRED - 9 S.F. PROVIDED

VA3 SOFFIT AREA = 436 S.F. (2 AREA TYP.)
VENT AREA REQUIRED 436S.F. / 150 = 2.90 S.F.
SOFFIT VENT: 515" x 3" = 1,545 SQ IN = 11 S.F.
519" x 3" = 1,557 SQ IN = 11 S.F.
TOTAL PROVIDED = 22 S.F

2.90 S.F. REQUIRED - 22 S.F. PROVIDED

VA4 SOFFIT AREA = 408 S.F. (3 AREA TYP.)
VENT AREA REQUIRED 408 S.F. / 150 = 2.80 S.F.
SOFFIT VENT: 163" x 3" = 489 SQ IN = 3.30 S.F.
163" x 3" = 489 SQ IN = 3.30 S.F.
163" x 3" = 489 SQ IN = 3.30 S.F.
TOTAL PROVIDED = 10 S.F .

2.80 S.F. REQUIRED - 10 S.F. PROVIDED

VA5 SOFFIT AREA = 1080 S.F. (3 AREA TYP.)
VENT AREA REQUIRED 1080 S.F. / 150 = 7.20 S.F.
SOFFIT VENT: 164" x 3" = 492 SQ IN = 3.28 S.F.
164" x 3" = 492 SQ IN = 3.28 S.F.
984" x 3" = 2,952 SQ IN = 19.70 S.F.
TOTAL PROVIDED = 26.30 S.F .

7.20 S.F. REQUIRED - 26.30 S.F. PROVIDED

* = FREE AREA SQ. INCHES FOR PRE-MANUFACTURED VENTS

IDENTIFICATION STAMP
DIV. OF THE STATE ARCHITECT
APP: 02-123307 INC:
REVIEWED FOR
SS ☑ FLS ☑ ACS ☑
DATE: 10/15/2025

Owner:
WASHINGTON UNIFIED SCHOOL DISTRICT

WASHINGTON UNIFIED SCHOOL DISTRICT
7950 SOUTH ELM AVE.
FRESNO, CA 93706

Project Name:
STUDENT SERVICES

Project Address:
WASHINGTON UNION HIGH SCHOOL
6041 SOUTH ELM AVE.
FRESNO, CA 93706

integrated designs
by SOMAM, Inc.

ARCHITECTURE ENGINEERING INTERIOR DESIGN

6011 N. FRESNO STREET, SUITE 130
FRESNO CALIFORNIA 93710
P:(559) 436-0881 F:(559) 436-0887
E: design@somam.com
integrateddesigns.com

Ownership of Documents
This document, the ideas and designs incorporated herein, as an instrument of Professional Service is the property of Integrated Designs by SOMAM Inc. and is not to be used, in whole or in part for any other project without written authorization.
© COPYRIGHT 2024

Stamp:
LICENSED ARCHITECT FELIPE CEBALLOS No. C 12834 REN. 8-31-27 STATE OF CALIFORNIA

Sheet Title:
ROOF PLAN

Job No.: **5613**

Sheet No.: **A4.01**

Release: DSA SUBMITTAL 04-02-25

G:\2023\rs\23-5613 WASHINGTON UNION HIGH SCHOOL - STUDENT SERVICES\Sheets\5613-A4.10 ROOF PLAN.dwg FRANK AYALA 9/19/25

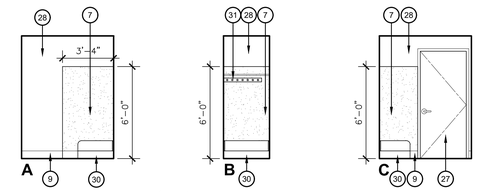

1 JANITOR CLOSET 144
1/4" = 1'-0"

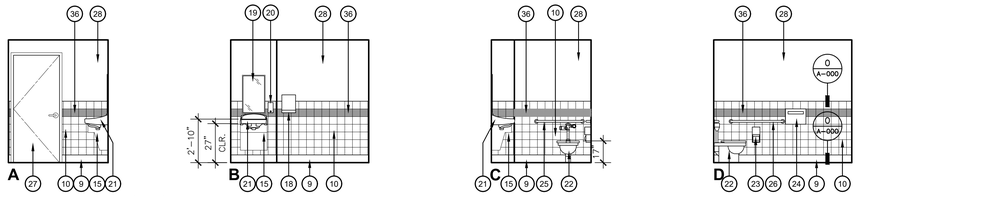

2 TOILET ROOM 107
1/4" = 1'-0"

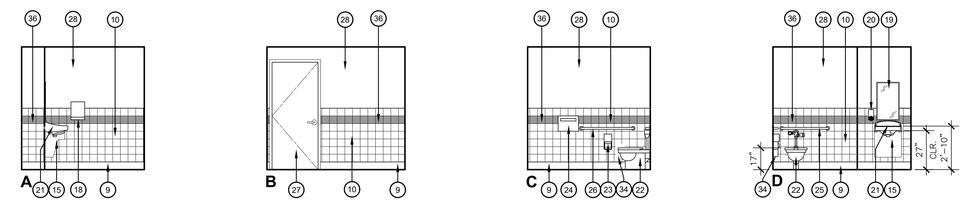

3 TOILET ROOM 108
1/4" = 1'-0"

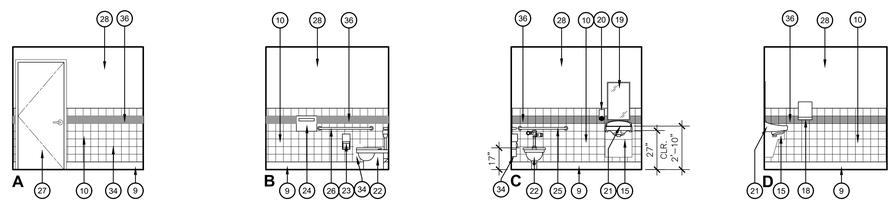

4 TOILET ROOM 137
1/4" = 1'-0"

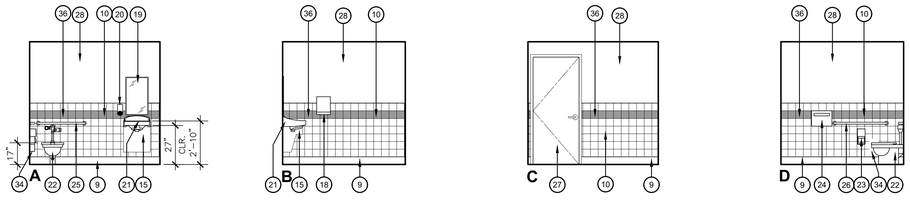

5 TOILET ROOM 145
1/4" = 1'-0"

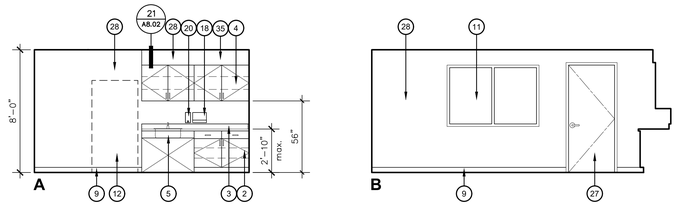

6 STAFF LOUNGE 142
1/4" = 1'-0"

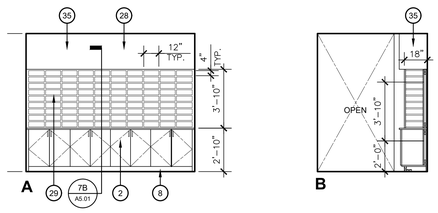

7 MAIL-PICKUP 134
1/4" = 1'-0"

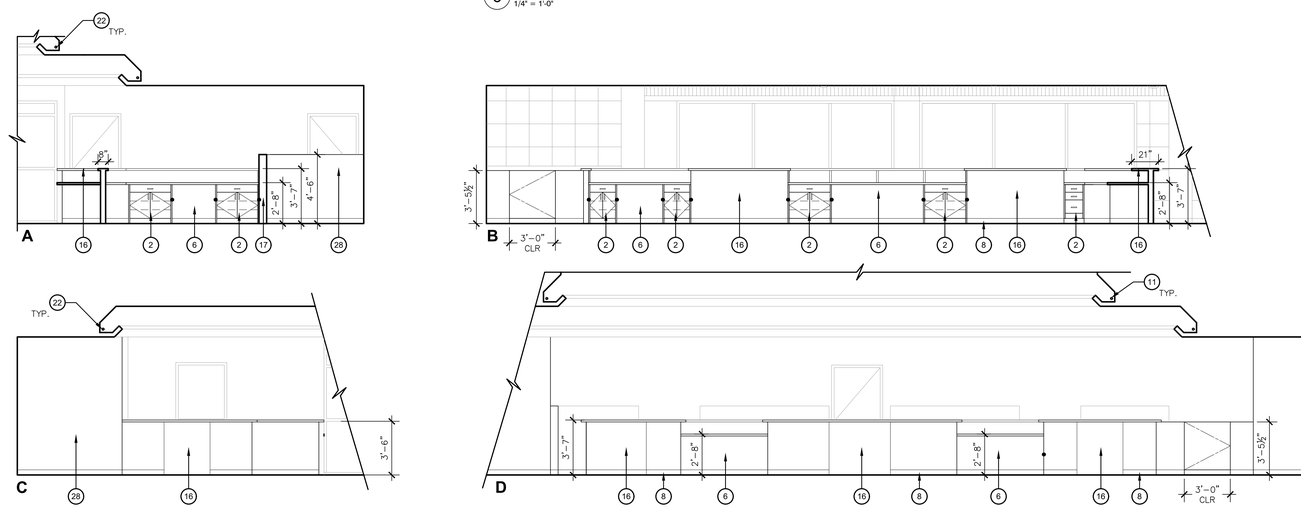

8 RECEPTION 102
1/4" = 1'-0"

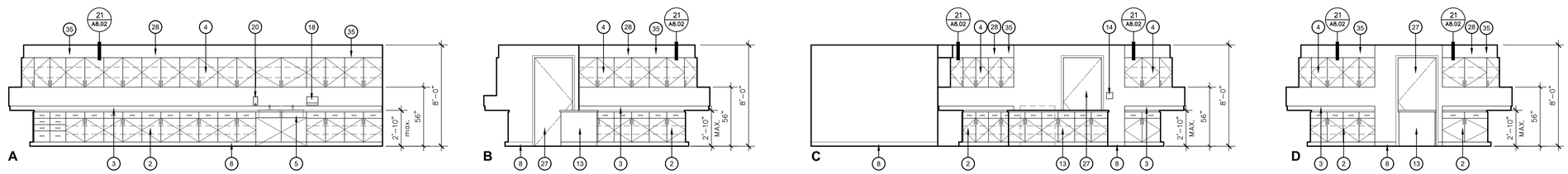

9 WORKING ROOM 109
1/4" = 1'-0"

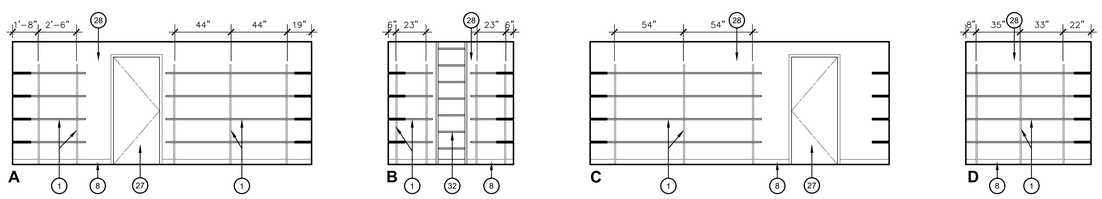

10 PAPER STORAGE 111
1/4" = 1'-0"

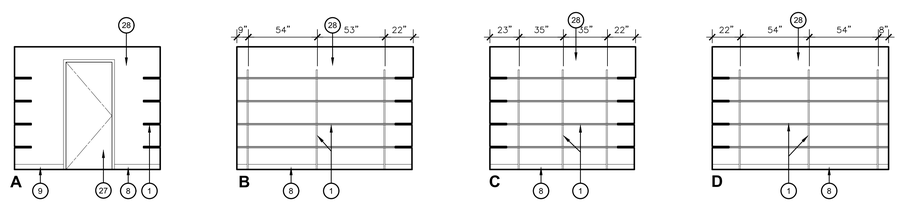

11 ARCHIVE STORAGE 110
1/4" = 1'-0"

KEY NOTES

1. PLASTIC LAMINATED ADJUSTABLE SHELVING SYSTEM w/ K & V BRACKETS - SEE 25/A8.01 FOR BACKING.
2. PLASTIC LAMINATED BASE CABINET - SEE 11/A8.01
3. PLASTIC LAMINATED COUNTER w/ BACK SPLASH - SEE 14/A8.01
4. PLASTIC LAMINATED UPPER CABINETS w/ ADJUSTABLE SHELVES - SEE 11/A8.01
5. ACCESSIBLE SINK - SEE 7/A8.01 & PLUMBING DRAWINGS FOR TYPE OF UNIT
6. KNEE SPACE.
7. FIBERGLASS REINFORCED PANELS (FRP) o/ GYPSUM BOARD.
8. 4" RUBBER TOP SET BASE.
9. 6" CONCRETE BASE, - SEE 3/A7.01.
10. 6"X6" CERAMIC TILE.
11. WINDOW - SEE WINDOW SCHEDULE SHEET A0.01.
12. ACCESSIBLE REFRIGERATOR BY OWNER (N.I.C.). COMBINATION REFRIGERATORS AND FREEZERS SHALL HAVE AT LEAST 50% OF THE FREEZER SPACE 54" MAX. ABOVE FINISH FLOOR. PROVIDE ELECTRICAL OUTLET AND WATER FOR ICE - SEE ELECTRICAL AND PLUMBING DRAWINGS.
13. ISLAND BASE CABINET- SEE DETAIL 11/A8.01.
14. ROOM IDENTIFICATION SIGN. SEE 19/A8.01
15. UNDER LAVATORY GUARD LG-1.
16. PLASTIC LAMINATED RECEPTION DESK- SEE DETAILS 23 & 24/A8.01.
17. PRIVACY WALL.
18. PAPER TOWEL DISPENSER, - SEE 4/A8.01 & SPECS. PT-1.
19. MIRROR, - SEE 4/A8.01. MIR-1 and 25/A8.02
20. SOAP DISPENSER, - SEE 4/A8.01. SD-1
21. LAVATORY, SEE PLUMBING DRAWINGS FOR TYPE
22. WATER CLOSET, SEE PLUMBING DRAWINGS FOR TYPE
23. TOILET PAPER DISPENSER ROLL. TTD-1
24. TOILET SEAT COVER DISPENSER. SC-1
25. 36" GRAB BAR - SEE 3 & 6/A8.01. GB-1
26. 48" GRAB BAR - SEE 3 & 6/A8.01. GB-2
27. INTERIOR DOOR - SEE SCHEDULE A0.01
28. GYPSUM BOARD, PAINT.
29. PLASTIC LAMINATED MAIL CUBBIES - SEE 11/A8.01 FOR BACKING.
30. JANITOR MOP SINK, SEE PLUMBING DRAWINGS
31. MOP & BROOM HOLDER. MBH-1
32. ROOF ACCESS LADDER- SEE DETAIL 5/A8.02.
33. ACCESSIBLE HI / LOW DRINKING FOUNTAIN & BOTTLE FILLER, - SEE PLUMBING DRAWINGS & 14/A8.02
34. SANITARY NAPKIN DISPOSAL. SUPPLIED BY OWNER, INSTALLED BY CONTRACTOR.
35. SOFFIT - SEE DETAILS 21/A8.02 AND 12//S1.04.
36. CERAMIC TILE COLOR ACCENT - COLOR TO BE SELECTED BY ARCHITECT.

IDENTIFICATION STAMP
DIV. OF THE STATE ARCHITECT
APP: 02-123307 INC:
REVIEWED FOR
SS ☑ FLS ☑ ACS ☑
DATE: 10/15/2025

Owner:
WASHINGTON UNIFIED SCHOOL DISTRICT

WASHINGTON UNIFIED SCHOOL DISTRICT
7950 SOUTH ELM AVE.
FRESNO, CA 93706

Project Name:
STUDENT SERVICES

Project Address:
WASHINGTON UNION HIGH SCHOOL
6041 SOUTH ELM AVE.
FRESNO, CA 93706

integrated designs
by SOMAM, Inc.

ARCHITECTURE ENGINEERING INTERIOR DESIGN

6011 N. FRESNO STREET, SUITE 130
FRESNO CALIFORNIA 93710
P:(559) 436-0881 F:(559) 436-0887
E: design@somam.com
integrateddesigns.com

Ownership of Documents
This document, the ideas and designs incorporated herein, as an instrument of Professional Service is the property of Integrated Designs by SOMAM Inc. and is not to be used, in whole or in part for any other project without written authorization.
© COPYRIGHT 2024

Stamp:
LICENSED ARCHITECT
FRANK PEREZ CEBALLOS
No. C 12834
REN. 8-31-
STATE OF CALIFORNIA

Sheet Title:
INTERIOR ELEVATIONS

Job No.: **5613**

Sheet No.: **A5.01**

Release: DSA SUBMITTAL 04-02-25

G:\2023frs\23-5613 WASHINGTON UNION HIGH SCHOOL - STUDENT SERVICES\Sheets\5613-A5.10 INTERIOR ELEVATIONS.dwg
FRANK AYALA
9/19/25

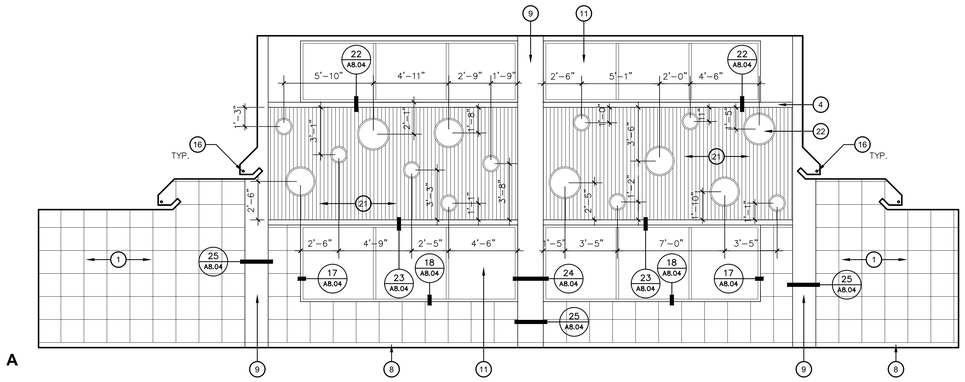

A

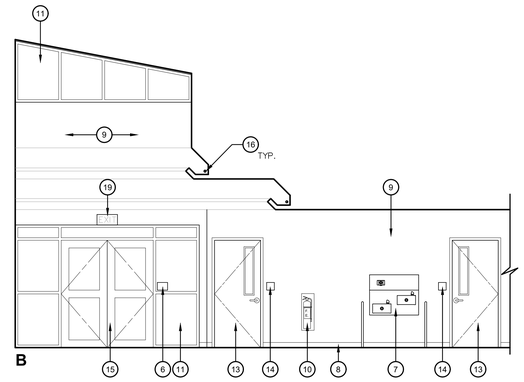

B

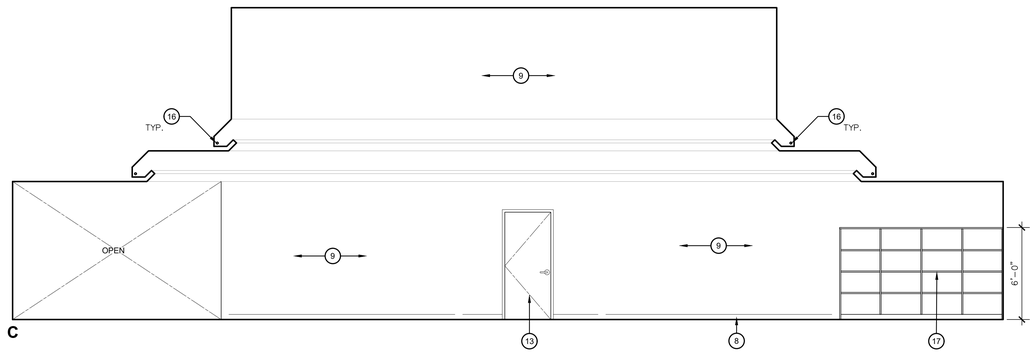

C

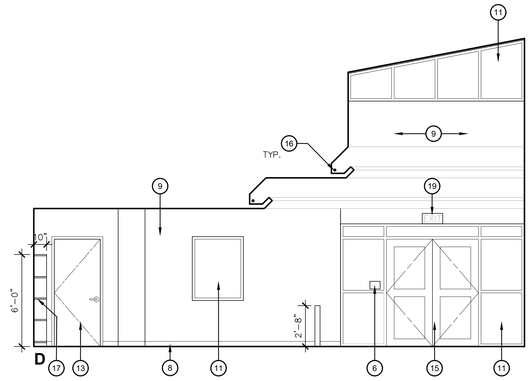

D

1 LOBBY 101
1/4" = 1'-0"

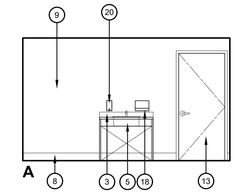

A

2 NURSE 106
1/4" = 1'-0"

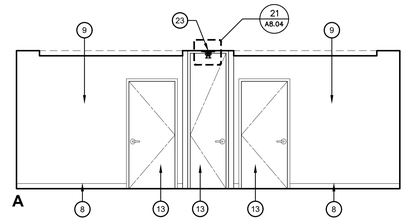

A

3 CONFERENCE ROOM 129 130
1/4" = 1'-0"

KEY NOTES

1. DECORATIVE STAINLESS STEEL WALL PANELING - SEE DETAIL 12/A8.04.
2. PLASTIC LAMINATED BASE CABINET - SEE 11/A8.01
3. PLASTIC LAMINATED COUNTER w/ BACK SPLASH - SEE 14/A8.01
4. 4" MAPLE WOOD TRIM - SEE DETAIL 17/A8.04.
5. ACCESSIBLE SINK - SEE 7/A8.01 & PLUMBING DRAWINGS FOR TYPE OF UNIT
6. EXIT SIGN - SEE 22/A8.01
7. ACCESSIBLE HI / LOW DRINKING FOUNTAIN & BOTTLE FILLER. - SEE PLUMBING DRAWINGS & 14/A8.02
8. 4" RUBBER TOP SET BASE.
9. GYPSUM BOARD, PAINT.
10. FIRE EXTINGUISHER CABINET WITH FIRE EXTINGUISHER - SEE 9/A8.01
11. WINDOW - SEE WINDOW SCHEDULE SHEET A0.01.
12. NOT USED.
13. INTERIOR DOOR - SEE SCHEDULE A0.01
14. ROOM IDENTIFICATION SIGN. SEE 19/A8.01.
15. EXTERIOR DOOR - SEE SCHEDULE A0.01.
16. COVE LIGHT STRIP - SEE ELECTRICAL PLAN SHEET E3.10.
17. PLASTIC LAMINATED OPEN SHELVING CABINET - SEE 11/A8.01
18. PAPER TOWEL DISPENSER - SEE 4/A8.01
19. ILLUMINATED EXIT SIGN - SEE 22/A8.01
20. SOAP DISPENSER, - SEE 4/A8.01
21. SOUND ABSORBING WOOD SLATS WALL PANELS - SEE DETAIL 22/A8.04 and 23/A8.04
22. WALL MOUNT LIGHTING FIXTURES - SEE ELECTRICAL SHEET E3.12 AND DETAIL - 9/E7.03
23. OPERABLE WALL TRACK SYSTEM - SEE DETAIL 21/A8.04

IDENTIFICATION STAMP
DIV. OF THE STATE ARCHITECT
APP: 02-123307 INC:
REVIEWED FOR
SS ☑ FLS ☑ ACS ☑
DATE: 10/15/2025

Owner:

WASHINGTON UNIFIED SCHOOL DISTRICT
7950 SOUTH ELM AVE.
FRESNO, CA 93706

Project Name:

STUDENT SERVICES

Project Address:

WASHINGTON UNION HIGH SCHOOL
6041 SOUTH ELM AVE.
FRESNO, CA 93706

integrated designs
by SOMAM, Inc.

ARCHITECTURE
ENGINEERING
INTERIOR DESIGN

6011 N. FRESNO STREET, SUITE 130
FRESNO CALIFORNIA 93710
P:(559) 436-0881 F:(559) 436-0887
E: design@somam.com
integrateddesigns.com

Ownership of Documents
This document, the ideas and designs incorporated herein, as an instrument of Professional Service is the property of Integrated Designs by SOMAM Inc. and is not to be used, in whole or in part for any other project without written authorization.
© COPYRIGHT 2024

Stamp:

Sheet Title:

INTERIOR ELEVATIONS

Job No.: **5613**

Sheet No.: **A5.02**

Release: 04-02-25

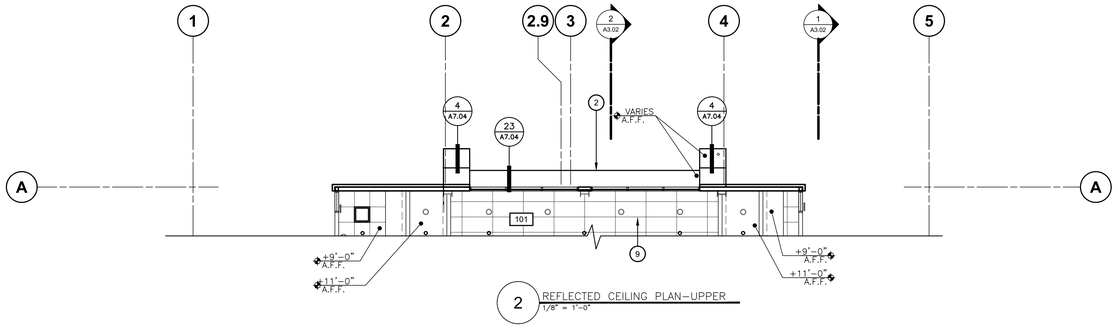

2 REFLECTED CEILING PLAN–UPPER
1/8" = 1'-0"

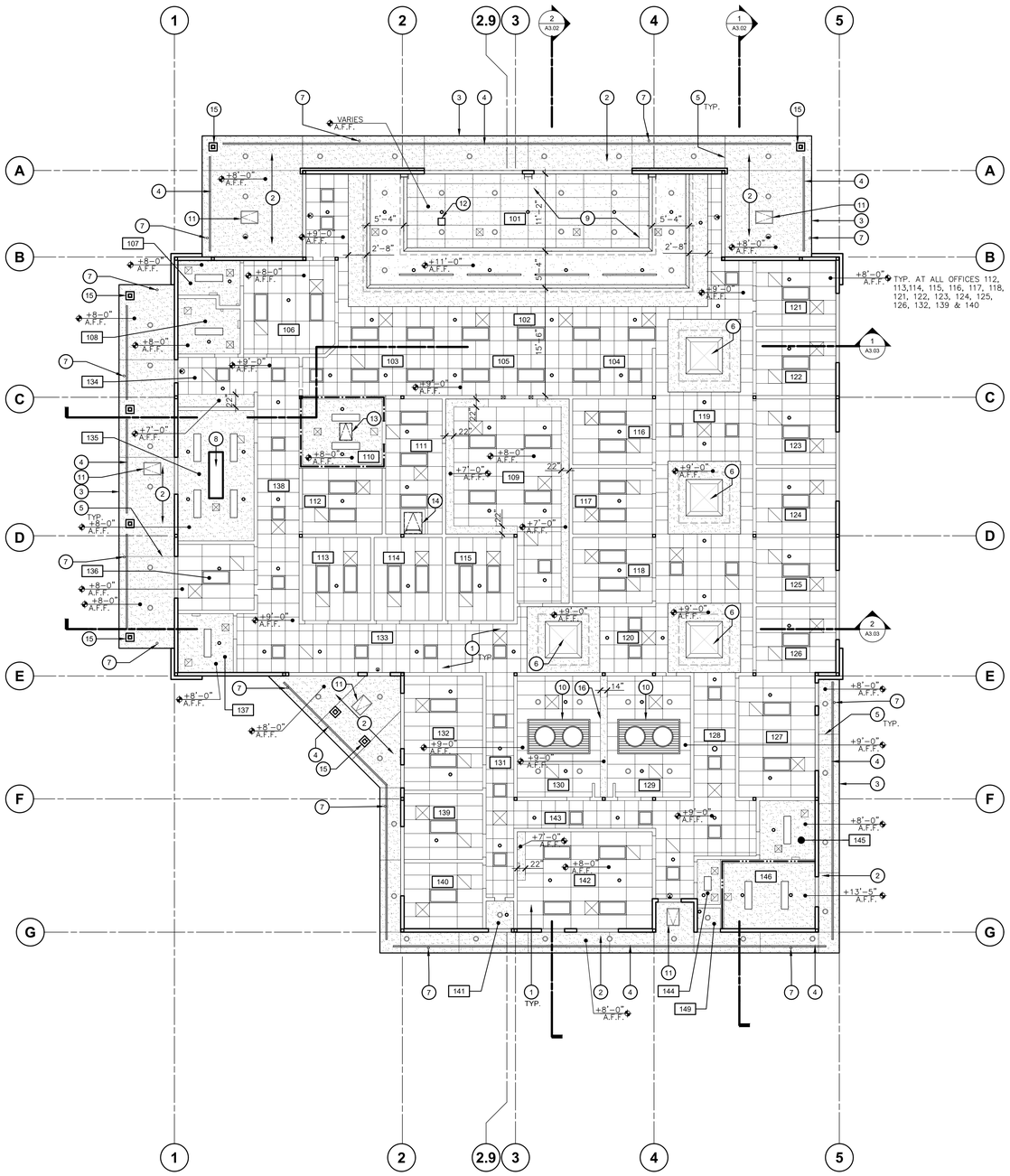

REFLECTED CEILING PLAN

STUDENT SERVICES

SCALE: 1/8" = 1'-0"

KEY NOTES

1. SUSPENDED ACOUSTICAL PANEL CEILING SYSTEM - SEE 2.12/A8.03.
2. CEMENT PLASTER SYSTEM, PRIME & PAINT, - SEE SPECS. and 20/A7.04
3. EDGE OF ROOF OVERHANG.
4. CONTINUOUS SHEET METAL 4" VENT SCREED, PAINT TO MATCH SOFFIT - SEE DETAIL 12/A7.02 FOR TYPE
5. CONTROL JOINT. NOTE: ALL METAL LATH BEHIND CONTROL JOINTS SHALL BE CUT.
6. SKYLIGHT, SEE 11/A7.02
7. OVERFLOW DRAIN OUTLET.
8. FULL HEIGHT SHELVING, ATTACH TO BLOCKING AT CEILING JOISTS - SEE DETAIL 20/A8.02.
9. 2'x4' TECTUM ACOUSTICAL PANELS- MECHANICALLY FASTENED EVERY 12" O.C - SEE DETAIL 3/A7.04 SPRAY PAINTED (COLOR TO BE SELECTED BY THE ARCHITECT).
10. LIGHT FIXTURE WOOD SURROUND - SEE DETAIL 22/A8.02.
11. SOFFIT ACCESS DOOR - SEE DETAIL 19/A7.04.
12. FIRE SPRINKLER 12"x12" AIR VENT ACCESS PANEL. COORDINATE LOCATION w/ FIRE SPRINKLER INSTALLER.
13. CEILING ACCESS PANEL 1HR. - SEE DETAIL 8/A8.02.
14. ROOF ACCESS HATCH - SEE DETAIL 3/A7.02.
15. EXTERIOR COLUMN- SEE STRUCTURAL DETAIL E/S6.01.
16. OPERABLE WALL SYSTEM TRACK - SEE DETAILS 21/A8.04 AND J/S6.02

LEGEND

- GYPSUM BOARD CEILING, - SEE FINISH SCHEDULE FOR REQUIRED FINISH AND TEXTURE.
- 2x4 SUSPENDED ACOUSTICAL TILE CEILING
- 2x2 SUSPENDED ACOUSTICAL TILE CEILING
- 2x4 TECTUM CEILING PANEL
- SOFFIT ACCESS DOOR. PAINT TO MATCH ADJACENT CEILING.
- LINEAR COVE LIGHTING (SEE ELECTRICAL DRAWINGS)
- 2x4 RECESSED LIGHT FIXTURE (SEE ELECTRICAL DRAWINGS)
- 2x2 RECESSED LIGHT FIXTURE (SEE ELECTRICAL DRAWINGS)
- 1x4 SURFACE MOUNTED LIGHT FIXTURE (SEE ELECTRICAL DRAWINGS)
- 1x2 SURFACE MOUNTED LIGHT FIXTURE (SEE ELECTRICAL DRAWINGS)
- 6" RECESSED DOWN LIGHT (SEE ELECTRICAL DRAWINGS)
- PENDANT LIGHT. SEE ELECTRICAL DRAWINGS
- EXIT SIGN (SEE ELECTRICAL DRAWINGS)
- MECHANICAL SUPPLY AIR GRILLE (SEE MECHANICAL DRAWINGS)
- MECHANICAL RETURN AIR INTAKE GRILLE (SEE MECHANICAL DRAWINGS)
- EXHAUST FAN (SEE MECHANICAL DRAWINGS)

ROOM NAMES

101	LOBBY
102	RECEPTION
103	ADMIN
104	ADMIN
105	HALL
106	NURSE
107	TOILET ROOM
108	TOILET ROOM
109	WORKING ROOM
110	ARCHIVE STORAGE
111	PAPER STORAGE
112	OFFICE
113	OFFICE
114	OFFICE
115	OFFICE
116	OFFICE
117	OFFICE
118	OFFICE
119	WAITING ROOM
120	WAITING ROOM
121	OFFICE
122	OFFICE
123	OFFICE
124	OFFICE
125	OFFICE
126	OFFICE
127	DIRECTOR
128	HALL
129	CONFERENCE
130	CONFERENCE
131	HALL
132	DIRECTOR
133	HALL
134	MAIL PICK-UP
135	BOOK STORAGE
136	CAMPUS POLICE
137	TOILET ROOM
138	HALL
139	OFFICE
140	OFFICE
141	FIRE SPRINKLER RISER
142	STAFF LOUNGE
143	HALL
144	JANITOR
145	TOILET ROOM
146	ELECT ROOM
148	NOT USED
149	WATER HEATER ROOM

GENERAL NOTES

1. SEE SHEETS A8.04 FOR TYPICAL SUSPENDED CEILING INSTALLATION, COMPRESSION STRUT DETAILS, SUSPENSION WIRE AND BRACING WIRE ATTACHMENT DETAILS.
2. ALL GYPSUM BOARD SOFFITS AND CEILINGS SHALL BE 5/8" THICK, UNLESS NOTED OTHERWISE.
3. SEE INTERIOR ELEVATIONS / SECTIONS FOR ADDITIONAL INFORMATION AT SPECIAL CEILING AREAS
4. CONTRACTOR SHALL BE RESPONSIBLE FOR PROVIDING PROPER WATER TIGHT FLASHING AROUND ALL ROOF PENETRATIONS, PER SMACNA STANDARDS
5. EXTEND GYP. WALL BOARD 6" ABOVE THE CEILING LINE
6. ALL CEILING HEIGHTS ARE NOTED ON THE MATERIAL AND FINISH SCHEDULE. SHEET A0.01
7. ALL CEMENT PLASTER CONTROL JOINTS NOT SHOWN, FOR REMAINING REQUIRED JOINTS PER SPECIFICATIONS, USE SINGLE POINT CONTROL JOINT TYPE 6 ON DETAIL 9/A7.01
8. ALL CEILING HEIGHTS ARE AT +8'-0" A.F.F. U.N.O.

IDENTIFICATION STAMP
DIV. OF THE STATE ARCHITECT
APP: 02-123307 INC:
REVIEWED FOR
SS ☑ FLS ☑ ACS ☑
DATE: 10/15/2025

Owner:
WASHINGTON UNIFIED SCHOOL DISTRICT

WASHINGTON UNIFIED SCHOOL DISTRICT
7950 SOUTH ELM AVE.
FRESNO, CA 93706

Project Name:
STUDENT SERVICES

Project Address:
WASHINGTON UNION HIGH SCHOOL
6041 SOUTH ELM AVE.
FRESNO, CA 93706

integrated designs
by SOMAM, Inc.

ARCHITECTURE ENGINEERING INTERIOR DESIGN

6011 N. FRESNO STREET, SUITE 130
FRESNO CALIFORNIA 93710
P:(559) 436-0881 F:(559) 436-0887
E: design@somam.com
integrateddesigns.com

Ownership of Documents
This document, the ideas and designs incorporated herein, as an instrument of Professional Service is the property of Integrated Designs by SOMAM Inc. and is not to be used, in whole or in part for any other project without written authorization.
© COPYRIGHT 2024

Stamp:
LICENSED ARCHITECT FELIPE CERVANTES No. C 12834 8-31-27 STATE OF CALIFORNIA

Sheet Title:
REFLECTED CEILING PLAN

Job No.: **5613**

Sheet No.: **A6.01**

Release: DSA SUBMITTAL 04-02-25

G:\2023\rs\23-5613 WASHINGTON UNION HIGH SCHOOL - STUDENT SERVICES\Sheets\5613-A6.10 REFLECTED CEILING PLAN.dwg FRANK AYALA 9/22/25

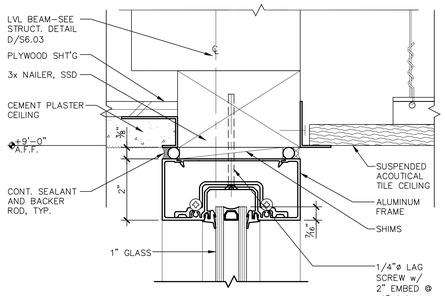

21 / A7.01 STOREFRONT WINDOW HEAD — ADG141–10 — SCALE: 6" = 1'–0"

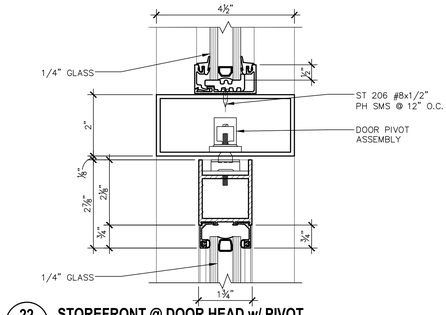

22 / A7.01 STOREFRONT @ DOOR HEAD w/ PIVOT — ADG141–11 — SCALE: 6" = 1'–0"

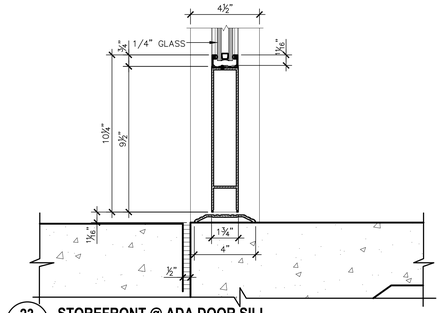

23 / A7.01 STOREFRONT @ ADA DOOR SILL — ADG141–12 — SCALE: 3" = 1'–0"

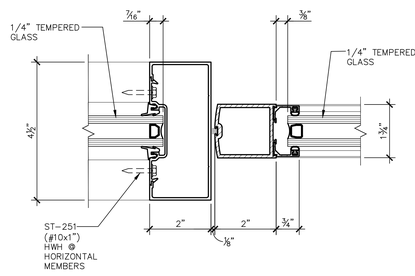

24 / A7.01 STOREFRONT DOOR @ WINDOW JAMB — ADG141–13 — SCALE: 6" = 1'–0"

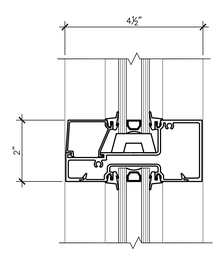

25 / A7.01 STOREFRONT @ WINDOW INTERMEDIATE HORIZONTAL — ADG141–14 — SCALE: 6" = 1'–0"

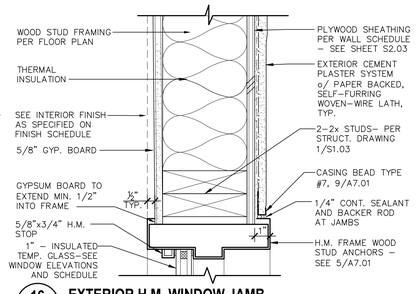

16 / A7.01 EXTERIOR H.M. WINDOW JAMB — ADG141–03 — SCALE: 3" = 1'–0"

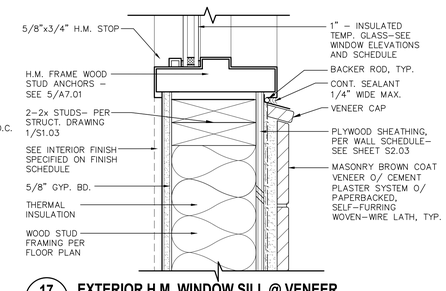

17 / A7.01 EXTERIOR H.M. WINDOW SILL @ VENEER — ADG141–01 — SCALE: 3" = 1'–0"

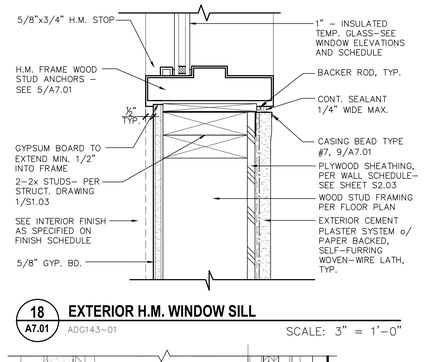

18 / A7.01 EXTERIOR H.M. WINDOW SILL — ADG143–01 — SCALE: 3" = 1'–0"

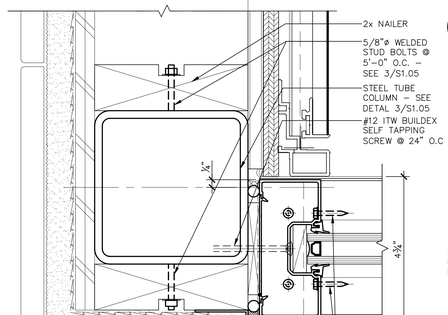

19 / A7.01 STOREFRONT WINDOW JAMB — ADG141–16 — SCALE: 6" = 1'–0"

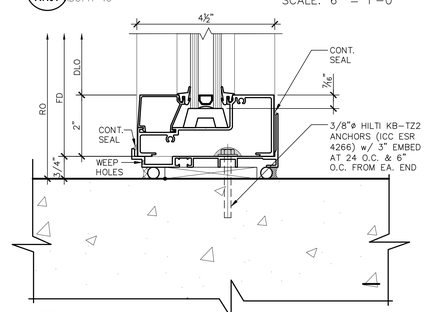

20 / A7.01 STOREFRONT WINDOW SILL — ADG141–15 — SCALE: 6" = 1'–0"

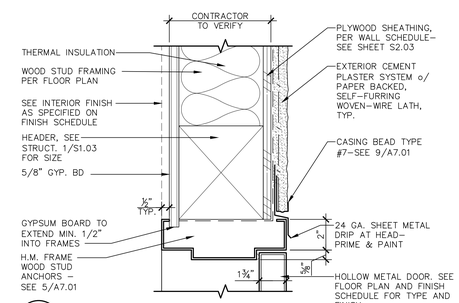

11 / A7.01 EXTERIOR HOLLOW METAL DOOR HEAD — ADD131–04 — SCALE: 3" = 1'–0"

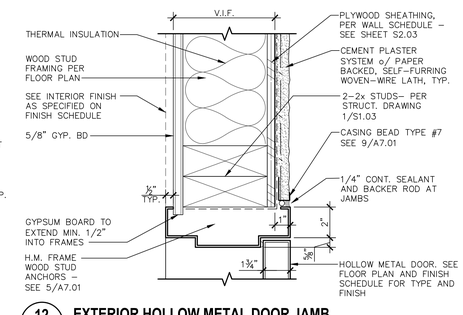

12 / A7.01 EXTERIOR HOLLOW METAL DOOR JAMB — ADD131–05 — SCALE: 3" = 1'–0"

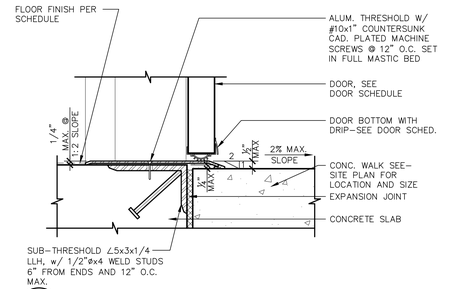

13 / A7.01 TYPICAL EXTERIOR DOOR THRESHOLD — ADD130–01 — SCALE: 3" = 1'–0"

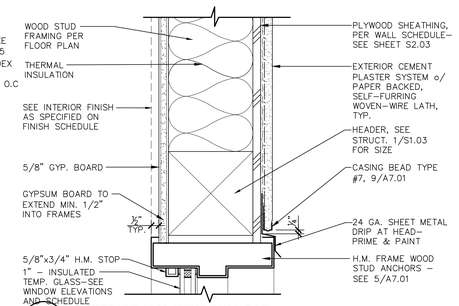

14 / A7.01 EXTERIOR H.M. WINDOW HEAD — ADG141–09 — SCALE: 3" = 1'–0"

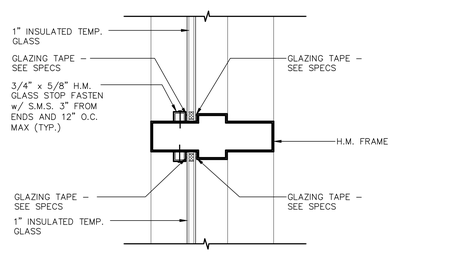

15 / A7.01 H.M. FRAME MULLION @ WINDOW — ADG141–02 — SCALE: 3" = 1'–0"

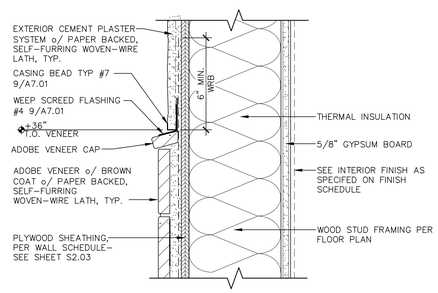

6 / A7.01 VENEER / CEMENT PLASTER TRANSITION — ADW142–03 — SCALE: 3" = 1'–0"

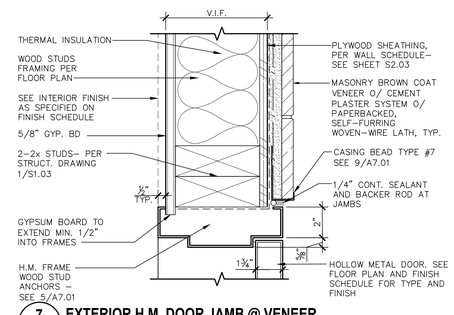

7 / A7.01 EXTERIOR H.M. DOOR JAMB @ VENEER — ADD131–06 — SCALE: 3" = 1'–0"

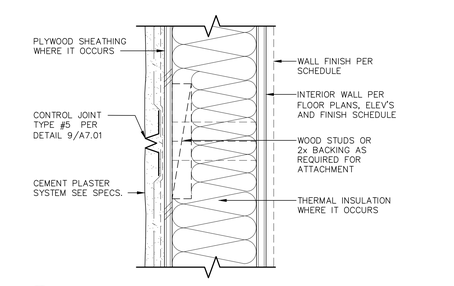

8 / A7.01 CONTROL / EXPANSION JOINT — ADW141–07 — SCALE: 3" = 1'–0"

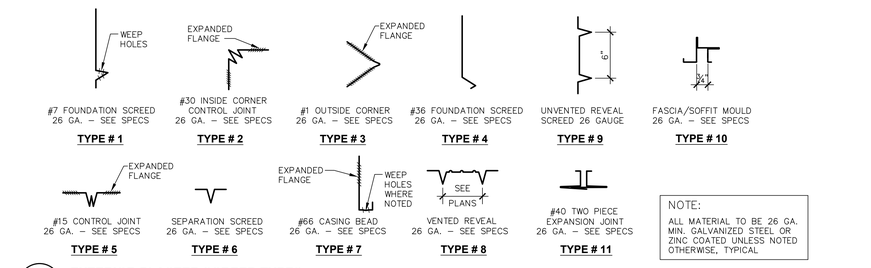

9 / A7.01 EXTERIOR PLASTER SCREED TYPES — ADD101–01 — SCALE: 3" = 1'–0"

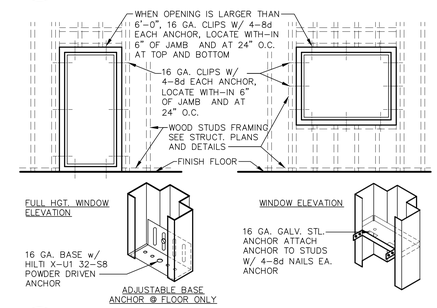

10 / A7.01 TYPICAL H.M. FRAME CONNECTION TO WOOD STUDS — ADG140–01 — SCALE: N.T.S.

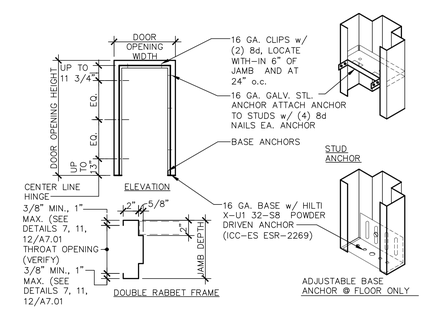

5 / A7.01 TYPICAL DOOR CONNECTION @ WOOD STUDS — ADD040–01 — SCALE: 1/4" = 1'–0"

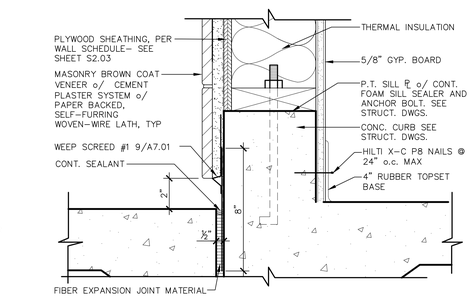

1 / A7.01 ADOBE VENEER @ BASE w/ GYP. BD. INTERIOR — FILENAME — SCALE: 3" = 1'–0"

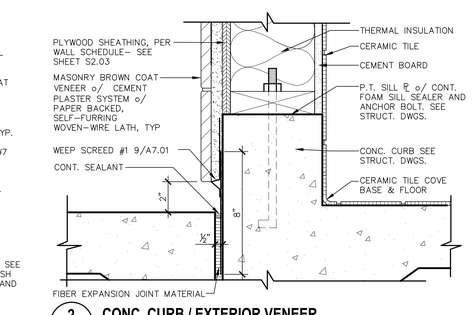

2 / A7.01 CONC. CURB / EXTERIOR VENEER — ADF100–02 — SCALE: 3" = 1'–0"

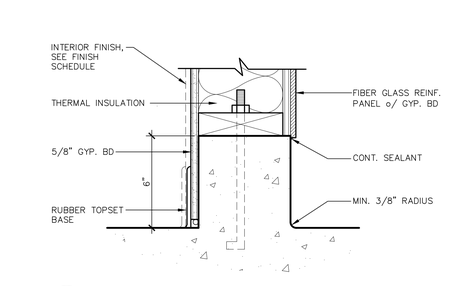

3 / A7.01 INTERIOR CURB — ADF240–01 — SCALE: 3" = 1'–0"

IDENTIFICATION STAMP
DIV. OF THE STATE ARCHITECT
APP: 02-123307 INC:
REVIEWED FOR
SS ☑ FLS ☑ ACS ☑
DATE: 10/15/2025

Owner:
WASHINGTON UNIFIED SCHOOL DISTRICT

WASHINGTON UNIFIED SCHOOL DISTRICT
7950 SOUTH ELM AVE.
~~FRESNO, CA 93706~~

Project Name:
STUDENT SERVICES

Project Address:
WASHINGTON UNION HIGH SCHOOL
6041 SOUTH ELM AVE.
FRESNO, CA 93706

integrated designs
by SOMAM, Inc.

ARCHITECTURE
ENGINEERING
INTERIOR DESIGN

6011 N. FRESNO STREET, SUITE 130
FRESNO CALIFORNIA 93710
P:(559) 436-0881 F:(559) 436-0887
E: design@somam.com
integrateddesigns.com

Ownership of Documents
This document, the ideas and designs incorporated herein, as an instrument of Professional Service is the property of Integrated Designs by SOMAM Inc. and is not to be used, in whole or in part for any other project without written authorization.
© COPYRIGHT 2024

Stamp:
LICENSED ARCHITECT — ET TIPO CEBALLOS — No. C 12834 — REN. 8-31-27 — STATE OF CALIFORNIA

Sheet Title:
EXTERIOR DETAILS

Job No.:
5613

Sheet No.:
A7.01

Release: DSA SUBMITTAL 04-02-25

G:\2023fns\23-5613 WASHINGTON UNION HIGH SCHOOL - STUDENT SERVICES\Sheets\5613-A7.01 EXTERIOR DETAILS.dwg FRANK AYALA 9/22/25

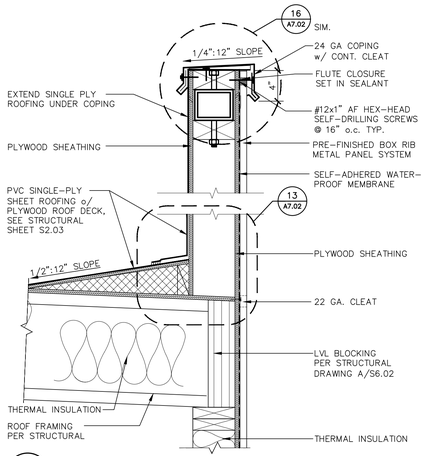

21 A7.02 COPING

ADR140-09B

SCALE: 1 1/2" = 1'-0"

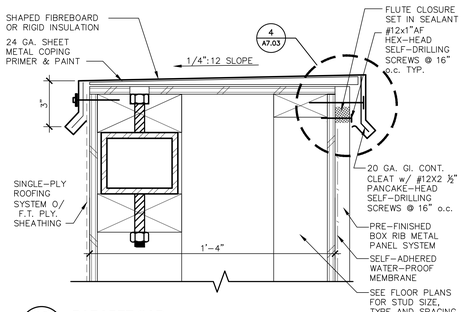

16 A7.02 PARAPET CAP

ADR140-05A

SCALE: 3" = 1'-0"

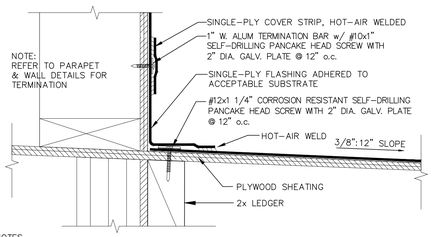

NOTES

1) INSTALL SEALANT WITH A 1/4" GAP BETWEEN ADJOINING SECTIONS.
2) SEALANT MUST BE CUT AT INSIDE AND OUTSIDE CORNERS. DO NOT BEND AROUND CORNERS.
3) SEALANT MUST BE FASTENED WITHIN 1" MAX. OF EACH BAR END.
4) FOR WALLS HIGHER THAN 90", INSTALL 2 ROWS OF MIDPOINT SECURE MENT EQUALLY SPACED.

17 A7.02 ADHERED WALL FLASHING GREATER THAN 45"

ADR100-02

SCALE: N.T.S.

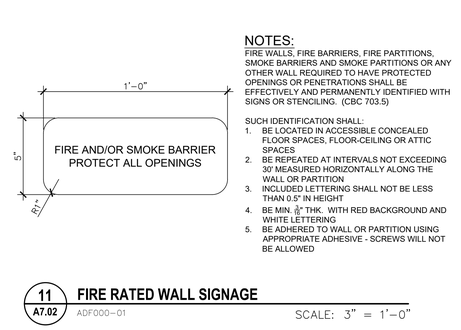

NOTES:

FIRE WALLS, FIRE BARRIERS, FIRE PARTITIONS, SMOKE BARRIERS AND SMOKE PARTITIONS OR ANY OTHER WALL REQUIRED TO HAVE PROTECTED OPENINGS OR PENETRATIONS SHALL BE EFFECTIVELY AND PERMANENTLY IDENTIFIED WITH SIGNS OR STENCILING. (CBC 703.5)

SUCH IDENTIFICATION SHALL:

1. BE LOCATED IN ACCESSIBLE CONCEALED FLOOR SPACES, FLOOR-CEILING OR ATTIC SPACES
2. BE REPEATED AT INTERVALS NOT EXCEEDING 30' MEASURED HORIZONTALLY ALONG THE WALL OR PARTITION
3. INCLUDED LETTERING SHALL NOT BE LESS THAN 0.5" IN HEIGHT
4. BE MIN. ⅛" THK. WITH RED BACKGROUND AND WHITE LETTERING
5. BE ADHERED TO WALL OR PARTITION USING APPROPRIATE ADHESIVE - SCREWS WILL NOT BE ALLOWED

11 A7.02 FIRE RATED WALL SIGNAGE

ADF000-01

SCALE: 3" = 1'-0"

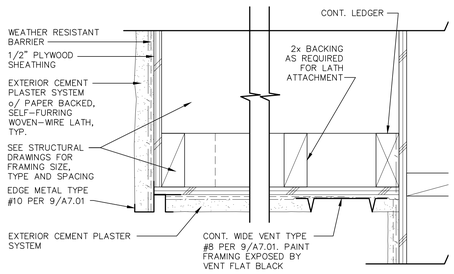

12 A7.02 VENTED PLASTER REVEAL

ADW141-02

SCALE: 3" = 1'-0"

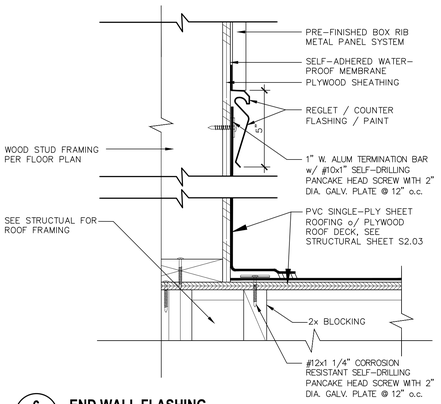

6 A7.02 END WALL FLASHING

ADR133-03

SCALE: 3" = 1'-0"

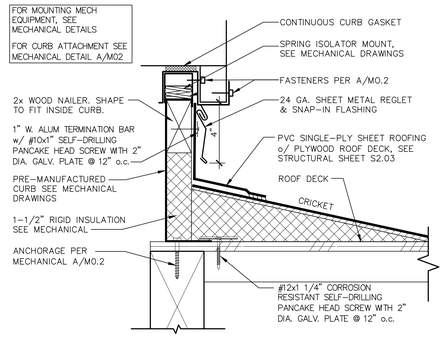

1 A7.02 A/C CURB @ WOOD DECK

ADR200-20A

SCALE: 3" = 1'-0"

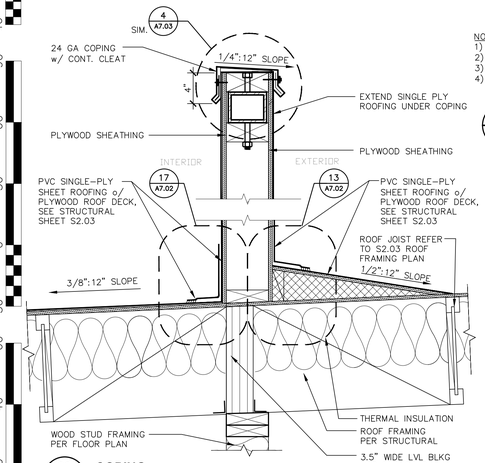

23 A7.02 COPING

ADR140-09C

SCALE: 1 1/2" = 1'-0"

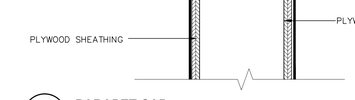

18 A7.02 PARAPET CAP

ADR140-05

SCALE: 3" = 1'-0"

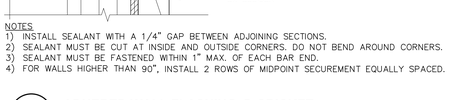

NOTES

1) INSTALL SEALANT WITH A 1/4" GAP BETWEEN ADJOINING SECTIONS.
2) SEALANT MUST BE CUT AT INSIDE AND OUTSIDE CORNERS. DO NOT BEND AROUND CORNERS.
3) SEALANT MUST BE FASTENED WITHIN 1" MAX. OF EACH BAR END.
4) FOR WALLS HIGHER THAN 90", INSTALL 2 ROWS OF MIDPOINT SECUREMENT EQUALLY SPACED.

13 A7.02 ADHERED WALL FLASHING @ CRICKET

ADR100-06

SCALE: N.T.S.



8 A7.02 SILL AT SKYLIGHT

ADR140-01

SCALE: 6" = 1'-0"

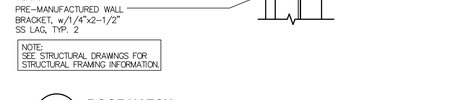

3 A7.02 ROOF HATCH

ADH130-02

SCALE: 3/4" = 1'-0"

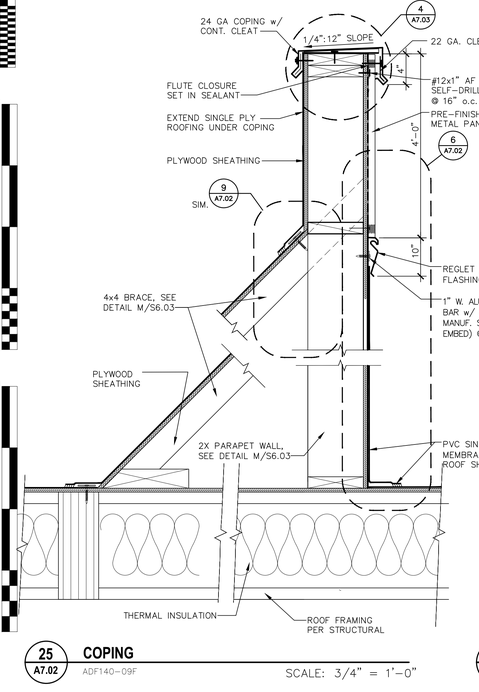

25 A7.02 COPING

ADF140-09F

SCALE: 3/4" = 1'-0"

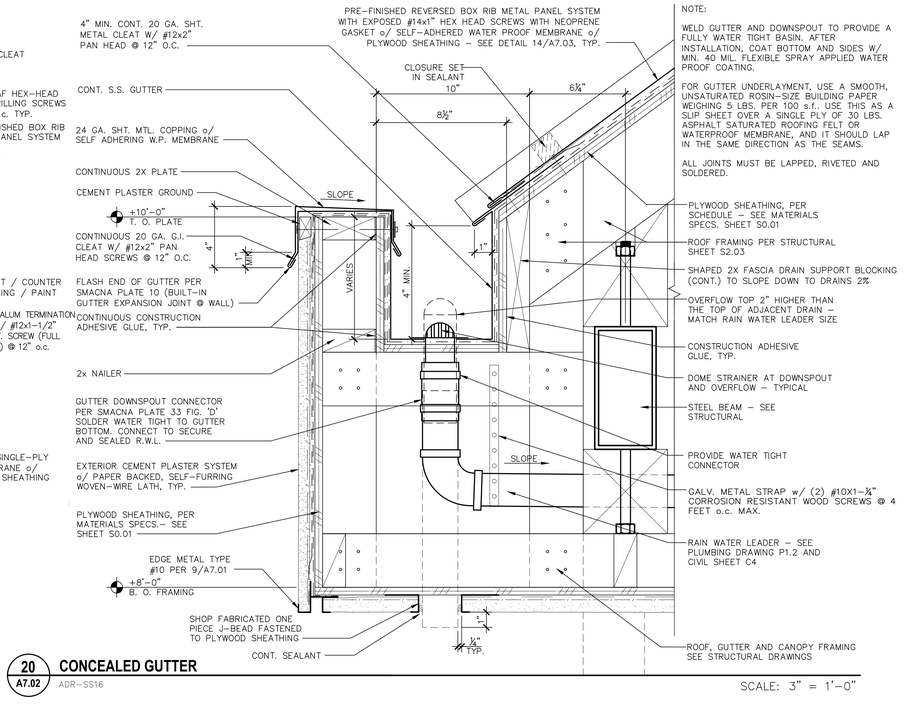

20 A7.02 CONCEALED GUTTER

ADR–SS16

SCALE: 3" = 1'-0"

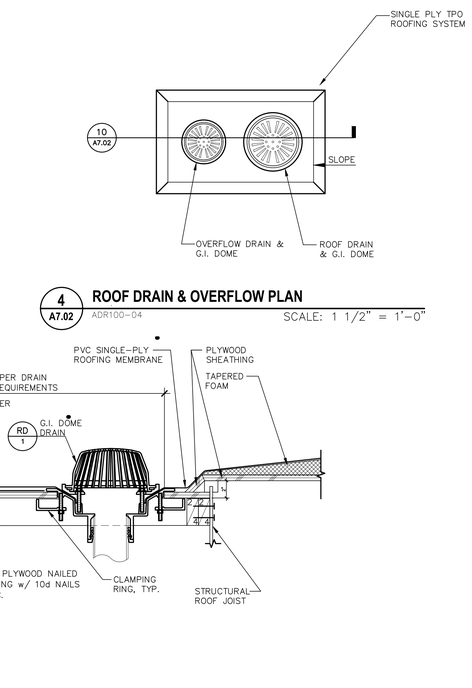

9 A7.02 END WALL FLASHING

ADR141-06

SCALE: 3" = 1'-0"

4 A7.02 ROOF DRAIN & OVERFLOW PLAN

ADR100-04

SCALE: 1 1/2" = 1'-0"

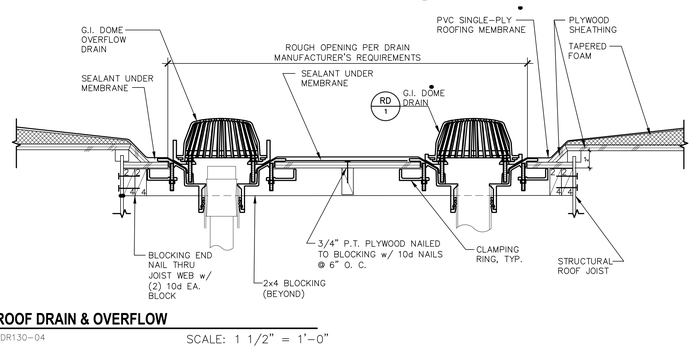

10 A7.02 ROOF DRAIN & OVERFLOW

ADR130-04

SCALE: 1 1/2" = 1'-0"

IDENTIFICATION STAMP
DIV. OF THE STATE ARCHITECT
APP: 02-123307 INC:
REVIEWED FOR
SS ☑ FLS ☑ ACS ☑
DATE: 10/15/2025

Owner:

WASHINGTON UNIFIED SCHOOL DISTRICT

WASHINGTON UNIFIED SCHOOL DISTRICT

7950 SOUTH ELM AVE.
~~FRESNO, CA 93706~~

Project Name:

STUDENT SERVICES

Project Address:

WASHINGTON UNION HIGH SCHOOL

6041 SOUTH ELM AVE.
FRESNO, CA 93706

integrated designs
by SOMAM, Inc.

ARCHITECTURE
ENGINEERING
INTERIOR DESIGN

6011 N. FRESNO STREET, SUITE 130
FRESNO CALIFORNIA 93710
P:(559) 436-0881 F:(559) 436-0887
E: design@somam.com
integrateddesigns.com

Ownership of Documents

This document, the ideas and designs incorporated herein, as an instrument of Professional Service is the property of Integrated Designs by SOMAM Inc. and is not to be used, in whole or in part for any other project without written authorization.

© COPYRIGHT 2024

Stamp:

LICENSED ARCHITECT FELIPE CEBALLOS No. C 12834 REN. 8-31-2026 STATE OF CALIFORNIA

Sheet Title:

EXTERIOR DETAILS

Job No.: **5613**

Sheet No.: **A7.02**

Release: DSA SUBMITTAL 04-02-25

G:\2023frs\23-5613 WASHINGTON UNION HIGH SCHOOL - STUDENT SERVICES\Sheets\5613-A7.02 EXTERIOR DETAILS.dwg

FRANK AYALA 9/22/25



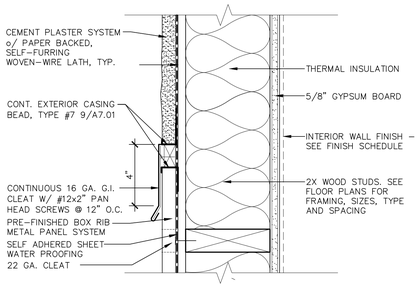

17 / A7.03 — **SHEET METAL PANEL / CEMENT PLASTER TRANSITION**
ADW142-04
SCALE: 3" = 1'-0"

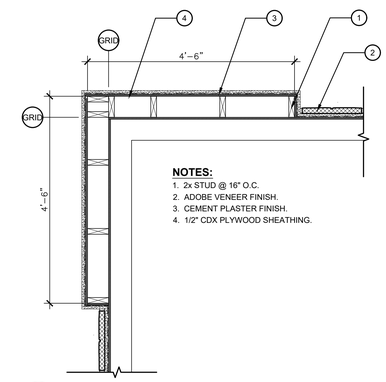

12 / A7.03 — **PILASTER COLUMN DETAIL**
ADW132-21
SCALE: 3/4" = 1'-0"

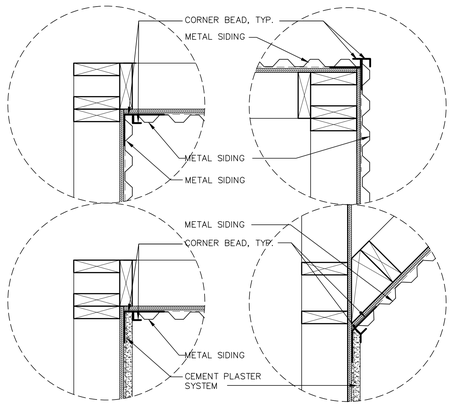

13 / A7.03 — **TYP. INSIDE / OUTSIDE METAL SIDING CORNER**
ADW134-03
SCALE: N.T.S.

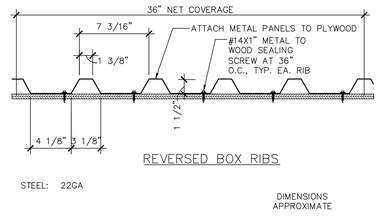

14 / A7.03 — **METAL PANEL**
ADR100-05
SCALE: N.T.S.

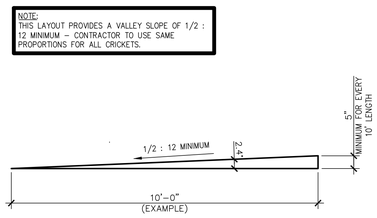

3/8" : 12" ROOF DECK SLOPE
PLAN VIEW

15 / A7.03 — **ROOF CRICKET AT 1/2" : 12**
ADR100-12
SCALE: 1/2" = 1'-0"

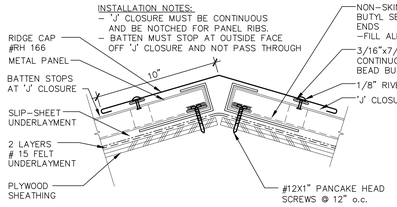

6 / A7.03 — **RIDGE / HIP**
ADR-SS2
SCALE: 3" = 1'-0"

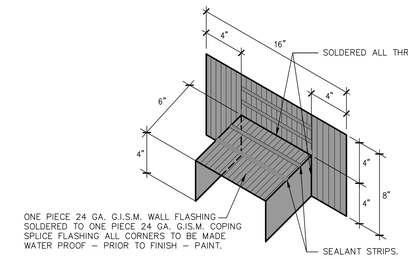

NOTE:
ONLY COPING FLASHING IS BEING SHOWN FOR CLARITY.

7 / A7.03 — **COPING SPLICE AT PERPENDICULAR WALL**
ADR100-03
SCALE: 3" = 1'-0"

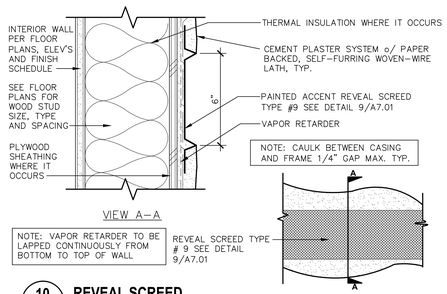

10 / A7.03 — **REVEAL SCREED**
ADW131-07
SCALE: 3" = 1'-0"

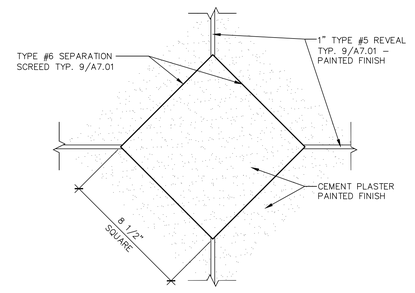

9 / A7.03 — **ACCENT DIAMOND**
ADW133-07
SCALE: 3" = 1'-0"

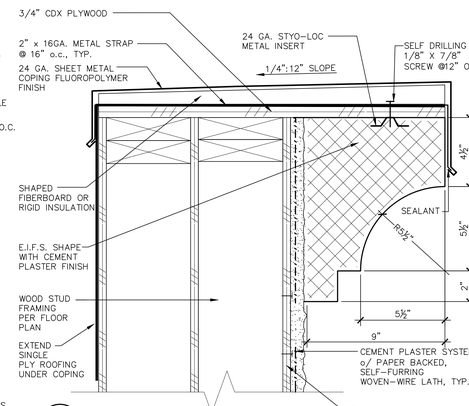

1 / A7.03 — **PARAPET CAP**
ADR140-05B
SCALE: 3" = 1'-0"

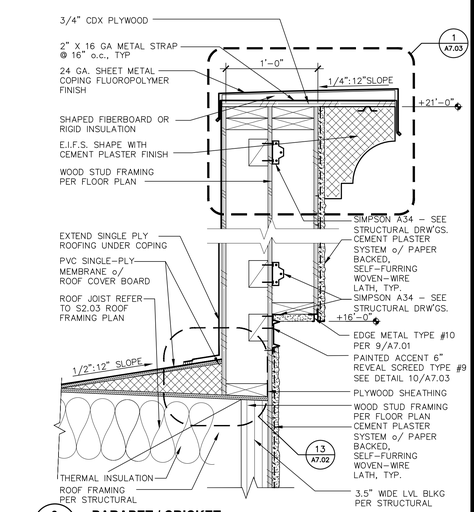

3 / A7.03 — **PARAPET / CRICKET**
ADR130-05
SCALE: 1 1/2" = 1'-0"

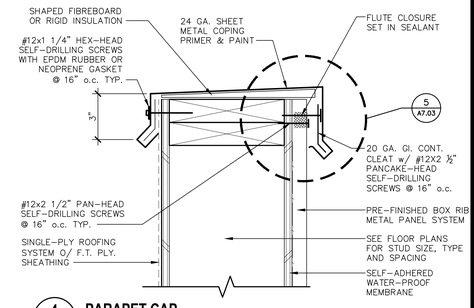

4 / A7.03 — **PARAPET CAP**
ADR140-05C
SCALE: 3" = 1'-0"

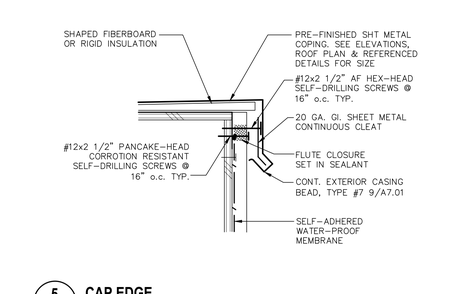

5 / A7.03 — **CAP EDGE**
ADR140-06
SCALE: 3" = 1'-0"

IDENTIFICATION STAMP
DIV. OF THE STATE ARCHITECT
APP: 02-123307 INC:
REVIEWED FOR
SS ☑ FLS ☑ ACS ☑
DATE: 10/15/2025

Owner:
WASHINGTON UNIFIED SCHOOL DISTRICT

WASHINGTON UNIFIED SCHOOL DISTRICT
7950 SOUTH ELM AVE.
~~FRESNO, CA 93706~~

Project Name:
STUDENT SERVICES

Project Address:
WASHINGTON UNION HIGH SCHOOL
6041 SOUTH ELM AVE.
FRESNO, CA 93706

integrated designs
by SOMAM, Inc.

ARCHITECTURE ENGINEERING INTERIOR DESIGN

6011 N. FRESNO STREET, SUITE 130
FRESNO CALIFORNIA 93710
P:(559) 436-0881 F:(559) 436-0887
E: design@somam.com
integrateddesigns.com

Ownership of Documents
This document, the ideas and designs incorporated herein, as an instrument of Professional Service is the property of Integrated Designs by SOMAM Inc. and is not to be used, in whole or in part for any other project without written authorization.
© COPYRIGHT 2024

Stamp:
LICENSED ARCHITECT — FELIPE CEBALLOS — No. C 12834 — 8-31-25 — STATE OF CALIFORNIA

Sheet Title:
EXTERIOR DETAILS

Job No.:
5613

Sheet No.:
A7.03

Release: DSA SUBMITTAL 04-02-25

G:\2023frs\23-5613 WASHINGTON UNION HIGH SCHOOL - STUDENT SERVICES\Sheets\5613-A7.03 EXTERIOR DETAILS.dwg
FRANK AYALA 9/19/25

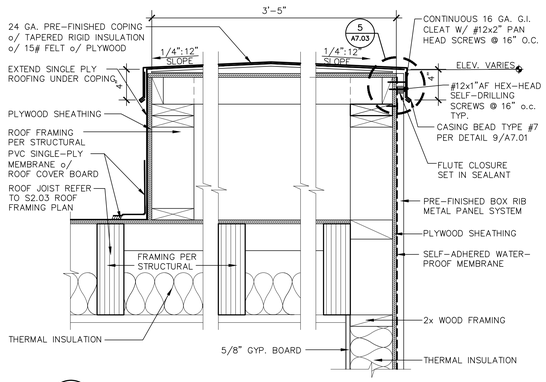

21 / A7.04 — RAKE FLASHING
ADW141-03
SCALE: 1 1/2" = 1'-0"

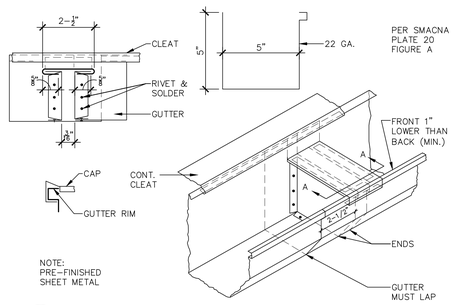

16 / A7.04 — LAP TYPE GUTTER EXPANSION JOINT
ADR131-01
SCALE: 3" = 1'-0"

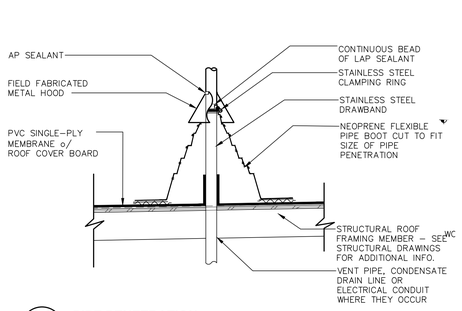

10 / A7.04 — PIPE PENETRATION
ADR140-10
SCALE: 3" = 1'-0"

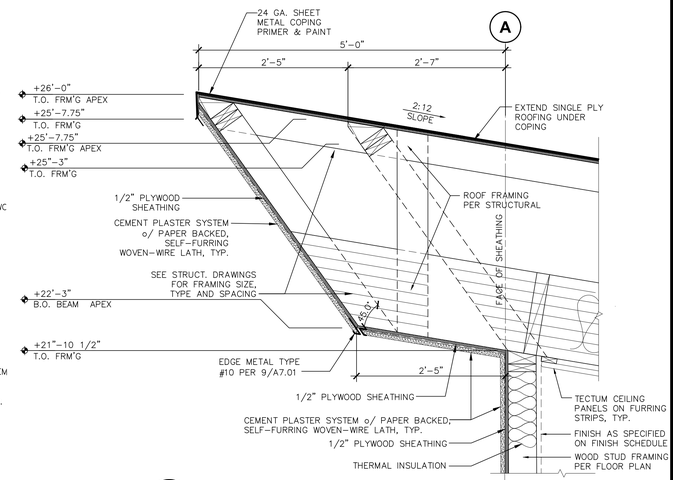

1 / A7.04 — ROOF EAVE SOFFIT
ADR141-01
SCALE: 1" = 1'-0"

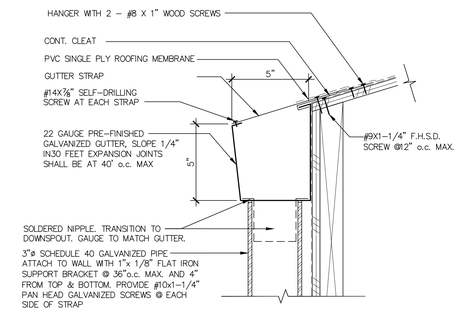

17 / A7.04 — SHEET METAL GUTTER
ADR-SS12B
SCALE: 3" = 1'-0"

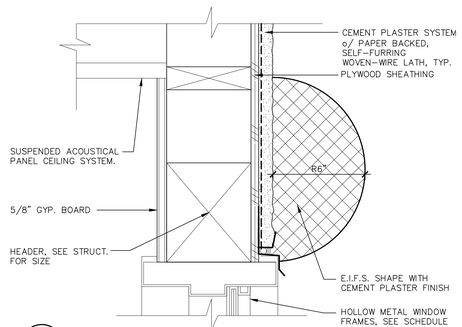

11 / A7.04 — PRECAST HALF ROUND MOULDING
ADR140-07
SCALE: 3" = 1'-0"

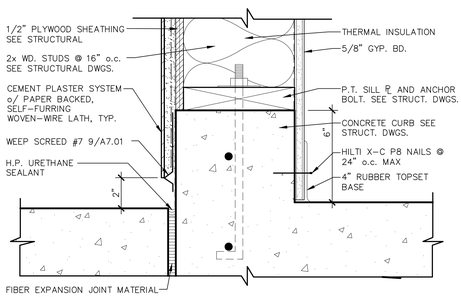

18 / A7.04 — EXT. CURB @ CERAMIC TILE & INT. GYP. BD.
ADF100-01
SCALE: 3" = 1'-0"

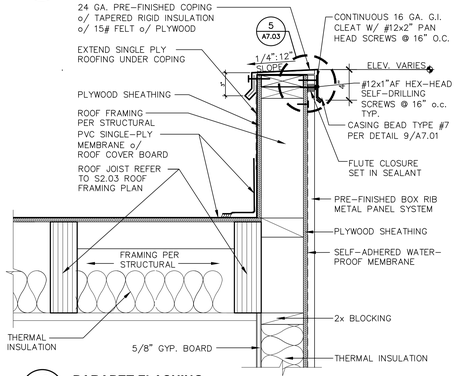

12 / A7.04 — PARAPET FLASHING
ADW141-13
SCALE: 1 1/2" = 1'-0"

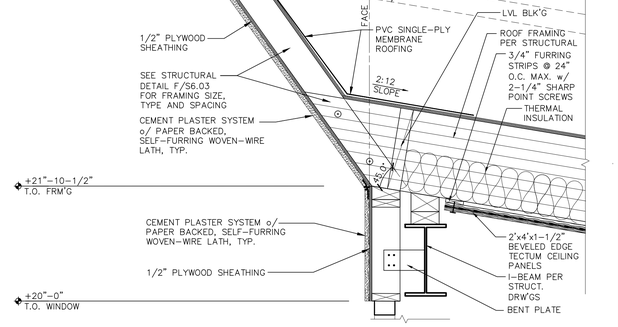

3 / A7.04 — ROOF EAVE SOFFIT
ADR141-02
SCALE: 1" = 1'-0"

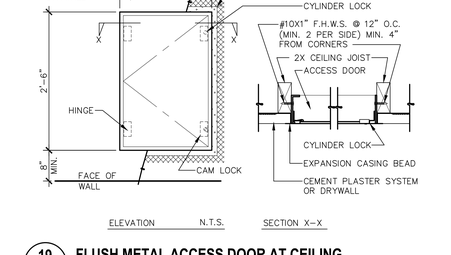

19 / A7.04 — FLUSH METAL ACCESS DOOR AT CEILING
ADC030-01
SCALE: 3/4" = 1'-0"

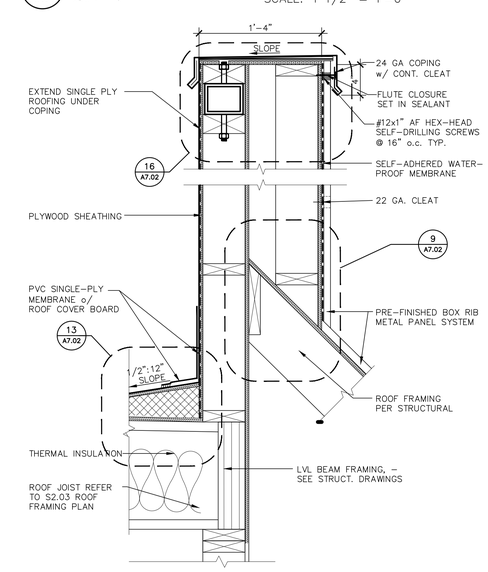

15 / A7.04 — COPING
ADR140-09E
SCALE: 1 1/2" = 1'-0"

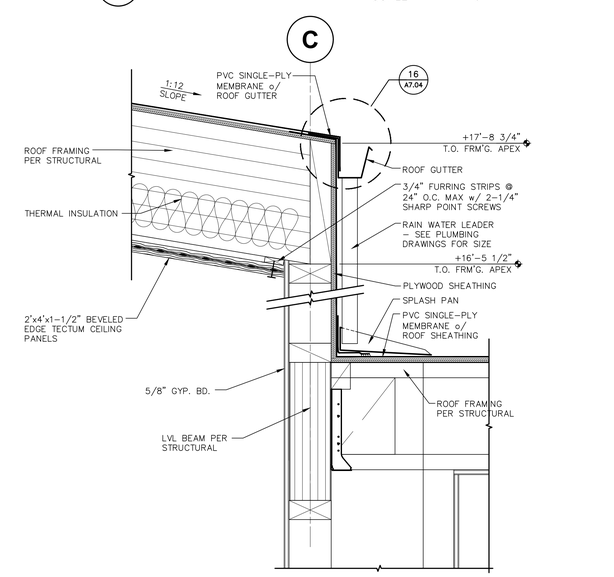

5 / A7.04 — ROOF GUTTER
ADR130-06
SCALE: 1 1/2" = 1'-0"

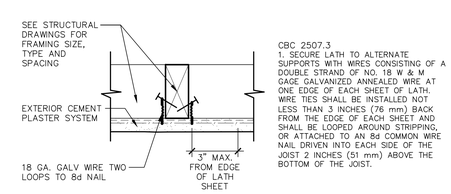

20 / A7.04 — PLASTER CONNECTIONS AT SOFFITS
ADW141-12
SCALE: 3" = 1'-0"

IDENTIFICATION STAMP
DIV. OF THE STATE ARCHITECT
APP: 02-123307 INC:
REVIEWED FOR
SS ☑ FLS ☑ ACS ☑
DATE: 10/15/2025

Owner:
WASHINGTON UNIFIED SCHOOL DISTRICT

WASHINGTON UNIFIED SCHOOL DISTRICT
7950 SOUTH ELM AVE.
FRESNO, CA 93706

Project Name:
STUDENT SERVICES

Project Address:
WASHINGTON UNION HIGH SCHOOL
6041 SOUTH ELM AVE.
FRESNO, CA 93706

integrated designs
by SOMAM, Inc.

ARCHITECTURE
ENGINEERING
INTERIOR DESIGN

6011 N. FRESNO STREET, SUITE 130
FRESNO CALIFORNIA 93710
P:(559) 436-0881 F:(559) 436-0887
E: design@somam.com
integrateddesigns.com

Ownership of Documents
This document, the ideas and designs incorporated herein, as an instrument of Professional Service is the property of Integrated Designs by SOMAM Inc. and is not to be used, in whole or in part for any other project without written authorization.
© COPYRIGHT 2024

Stamp:
LICENSED ARCHITECT
FELIPE CEBALLOS
No. C 12834
8-31-26
STATE OF CALIFORNIA

Sheet Title:
EXTERIOR DETAILS

Job No.:
5613

Sheet No.:
A7.04

Release: DSA SUBMITTAL 04-02-25

G:\2023\frs\23-5613 WASHINGTON UNION HIGH SCHOOL - STUDENT SERVICES\Sheets\5613-A7.04 EXTERIOR DETAILS.dwg
FRANK AYALA 9/22/25

NOTES:
1. DOOR SIGNS TO BE CONSTRUCTED FROM 1/4" THICK PLASTIC OR HEAT STAMPED FIGURES. COLORS TO BE SELECTED BY ARCHITECT.
2. ATTACH SIGNS USING FOUR (4) FLATHEAD, STAINLESS STEEL, TAMPER PROOF SCREWS, (COUNTERSUNK,) AND ADHESIVE.

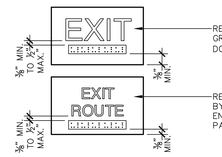

REQUIRED AT EXITS AT GRADE-LEVEL EXTERIOR DOORS (TYPICAL U.N.O.)

REQUIRED AT EXITS BY MEANS OF AN ENCLOSURE OR PASSAGEWAY

TACTILE AND BRAILLE EXIT SIGNAGE WITH ALL UPPER CASE TEXT 5/8" TO 2" IN HEIGHT CONTRACTED GRADE #2 CALIFORNIA BRAILLE SIGNAGE PER CBC 11B-216.3, 11B-216.4, 11B-703.

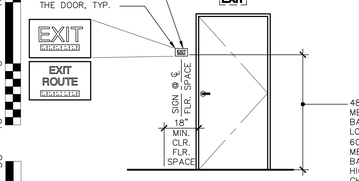

SIGN TO BE MOUNTED ON THE WALL, AT THE LATCH SIDE OF THE DOOR, TYP.

ILLUMINATED EXIT SIGN, SEE ELECTRICAL DRAWINGS

48" MIN. A.F.F., MEASURED FROM THE BASELINE OF THE LOWEST BRAILLE CELLS 60" MAX. A.F.F., MEASURED FROM THE HIGHEST LINE OF RAISED CHARACTERS

22 A8.01 TYPICAL EXIT SIGNAGE
ADX200-01 SCALE: 3/8" = 1'-0"

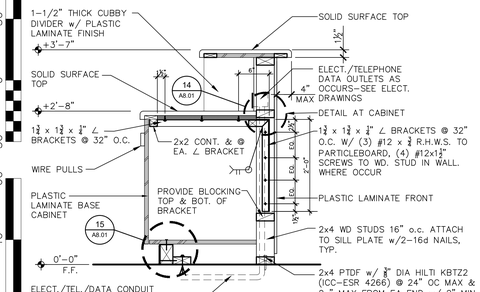

NOTE: SEE 13/S1.01 FOR PARTIAL HEIGHT WALL SUPPORT

23 A8.01 TRANSACTION COUNTER
ADI244-03A

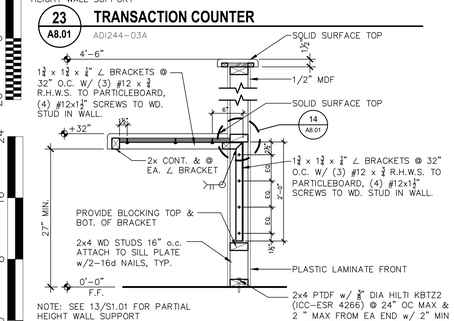

NOTE: SEE 13/S1.01 FOR PARTIAL HEIGHT WALL SUPPORT

24 A8.01 TRANSACTION COUNTER
ADI244-03C

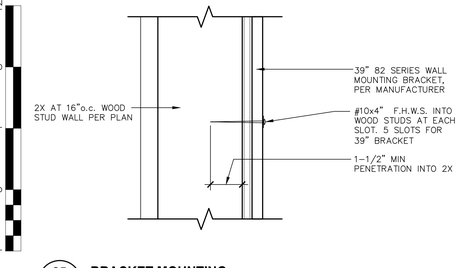

25 A8.01 BRACKET MOUNTING
ADM245-03 SCALE: 3" = 1'-0"

PER 11B-219.3
4% OF OCCUPANTS PER RECEIVERS.

OCCUPANTS 14x2 = 28.0
.04x28 (REQUIRED) = 1.12

TOTAL (NEEDED) = 2.0

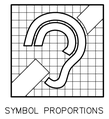

SYMBOL PROPORTIONS

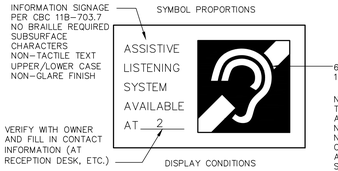

6" HIGH PICTOGRAM, 11B-703.6

NOTE:
THIS SIGN IS ASSISTING THE DEAF NOT BLIND - BRAILLE NOT REQUIRED. SEE CBC 11B-219.2 FOR ASSISTIVE-LISTENING SYSTEM REQUIREMENTS

16 A8.01 INTERNATIONAL SYMBOL OF ACCESS FOR HEARING IMPAIRED
ADA200-05 SCALE: 3" = 1'-0"

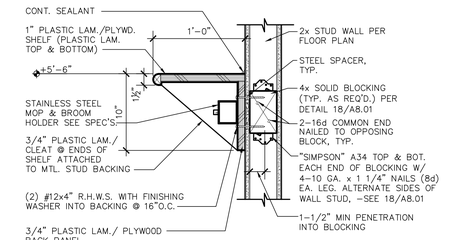

17 A8.01 JANITORS SHELF / MOP HOOKS
ADI244-10 SCALE: 1 1/2" = 1'-0"

18 A8.01 TYPICAL BACKING @ WOOD STUDS
ADW244-03 SCALE: 1 1/2" = 1'-0"

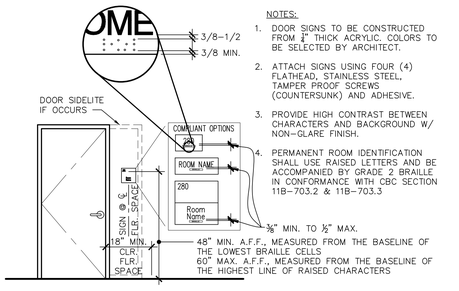

19 A8.01 ROOM ID SIGNAGE
ADX100-01A SCALE: NO SCALE

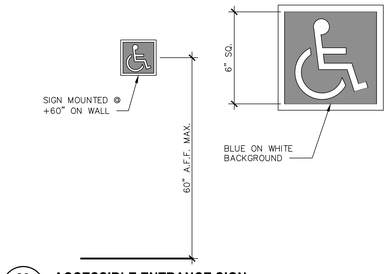

20 A8.01 ACCESSIBLE ENTRANCE SIGN
ADA200-07 SCALE: 3" = 1'-0"

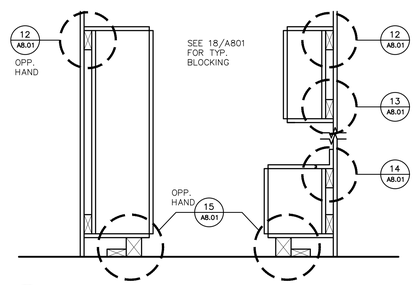

11 A8.01 CABINET SECTIONS
ADI244-02 SCALE: 3" = 1'-0"

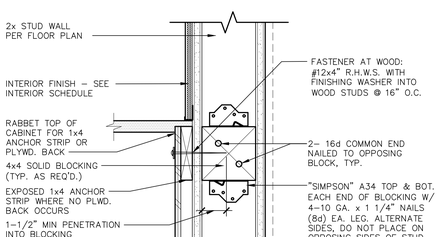

12 A8.01 WALL CABINET TOP ANCHOR
ADI244-03 SCALE: 3" = 1'-0"

13 A8.01 WALL CABINET BOTTOM ANCHOR
ADI244-04 SCALE: 3" = 1'-0"

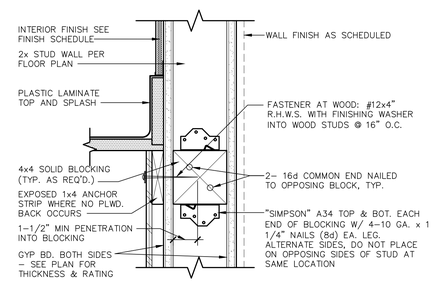

14 A8.01 BASE CABINET COUNTER TOP
ADI244-05 SCALE: 3" = 1'-0"

15 A8.01 BASE ANCHORAGE
ADI244-06 SCALE: 3" = 1'-0"

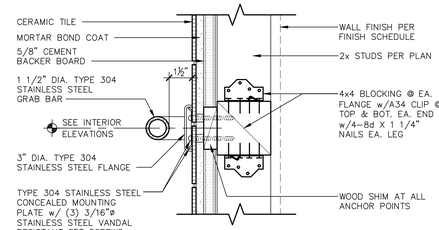

NOTE:
GRAB BAR SHALL BE CAPABLE OF SUPPORTING A 250 lb. POINT LOAD

6 A8.01 GRAB BAR ANCHORAGE
ADM246-01 SCALE: 3" = 1'-0"

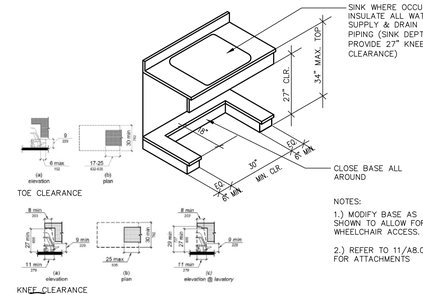

NOTES:
1.) MODIFY BASE AS SHOWN TO ALLOW FOR WHEELCHAIR ACCESS.

2.) REFER TO 11/A8.01 FOR ATTACHMENTS

7 A8.01 ACCESSIBLE STATION OR SINK COUNTERS
ADI200-20 SCALE: 1' = 1'-0"

NOTES:
1. DOOR SIGNS TO BE CONSTRUCTED FROM 1/4" THICK PLASTIC OR HEAT STAMPED FIGURES. COLORS TO BE SELECTED BY ARCHITECT.
2. ATTACH SIGNS USING FOUR (4) FLATHEAD, STAINLESS STEEL, TAMPER PROOF SCREWS (COUNTERSUNK) AND ADHESIVE.
3. 70% CONTRAST BETWEEN CHARACTERS AND BACKGROUND PER CBC 11B-703.5.1.
4. ISA SYMBOL CAN ALSO BE PLACED ON DOOR. THE LOCATION IS NOT REGULATED.

SIGN TO BE MOUNTED ON THE WALL AT THE LATCH SIDE OF THE DOOR, TYP.

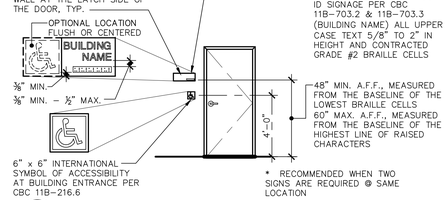

TACTILE AND BRAILLE ROOM ID SIGNAGE PER CBC 11B-703.2 & 11B-703.3 (BUILDING NAME) ALL UPPER CASE TEXT 5/8" TO 2" IN HEIGHT AND CONTRACTED GRADE #2 BRAILLE CELLS

48" MIN. A.F.F., MEASURED FROM THE BASELINE OF THE LOWEST BRAILLE CELLS 60" MAX. A.F.F., MEASURED FROM THE BASELINE OF THE HIGHEST LINE OF RAISED CHARACTERS

* RECOMMENDED WHEN TWO SIGNS ARE REQUIRED @ SAME LOCATION

8 A8.01 BUILDING ENTRANCE / I.S.A. SIGNAGE
ADA100-01 SCALE: 1/4" = 1'-0"

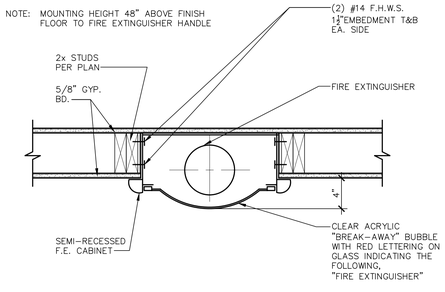

9 A8.01 SEMI-RECESSED F.E. CABINE @ NON-RATED WALLS
ADW244-06 SCALE: 1 1/2" = 1'-0"

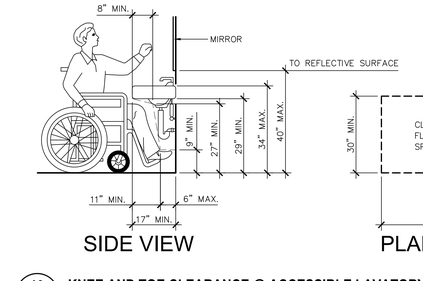

10 A8.01 KNEE AND TOE CLEARANCE @ ACCESSIBLE LAVATORY
ADA200-10 SCALE: 1/2" = 1'-0"

NOTES:
1. NO SHARP OR ABRASIVE SURFACES SHALL BE PRESENT UNDER LAVATORIES.
2. ALL PIPES UNDERNEATH LAVATORIES SHALL BE INSULATED TO PROTECT AGAINST CONTACT FROM THE PERSONS USING THE FIXTURE. (REFER TO SPECIFICATIONS)
3. THE LOWER REFLECTIVE EDGE OF MIRRORS SHALL NOT EXCEED 40 INCHES ABOVE THE FINISHED FLOOR.
4. ACCEPTABLE FAUCETS SHALL INCLUDE PUSH ELECTRONIC AND LEVER MECHANISM. FAUCETS WITH SELF-CLOSING VALVES SHALL REMAIN OPEN FOR NO LESS THAN 10 SECONDS. SEE PLUMBING DRAWINGS.
5. ACCESIBLE FAUCET CONTROLS SHALL BE PUSH TYPE WITH 5 LBS MAX. OPERATING FORCE.

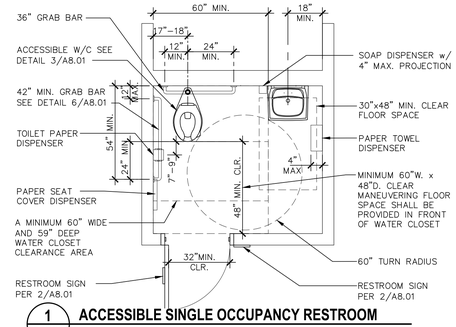

1 A8.01 ACCESSIBLE SINGLE OCCUPANCY RESTROOM
ADK200-03 SCALE: 3/8" = 1'-0"

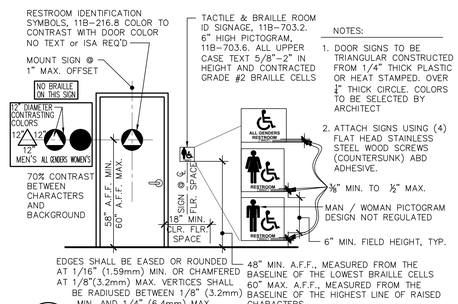

NOTES:
1. DOOR SIGNS TO BE TRIANGULAR CONSTRUCTED FROM 1/4" THICK PLASTIC OR HEAT STAMPED. OVER 1" THICK CIRCLE. COLORS TO BE SELECTED BY ARCHITECT
2. ATTACH SIGNS USING (4) FLAT HEAD STAINLESS STEEL WOOD SCREWS (COUNTERSUNK) ABD ADHESIVE.

2 A8.01 RESTROOM SIGNAGE
ADA000-01 SCALE: 1' = 1'-0"

3 A8.01 ACCESSIBLE MOUNTING HEIGHTS
ADA200-12 SCALE: 1/2" = 1'-0"

NOTE:
DISPENSERS @ 4" MAX. PROJECTION FROM WALL

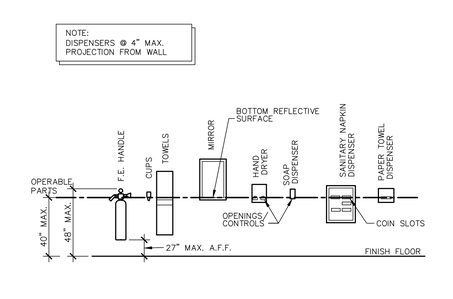

4 A8.01 MOUNTING HEIGHTS FOR RESTROOM ACCESSORIES
ADA200-13 SCALE: 1/2" = 1'-0"

IDENTIFICATION STAMP
DIV. OF THE STATE ARCHITECT
APP: 02-123307 INC:
REVIEWED FOR
SS ☑ FLS ☑ ACS ☑
DATE: 10/15/2025

Owner:
WASHINGTON UNIFIED SCHOOL DISTRICT

WASHINGTON UNIFIED SCHOOL DISTRICT
7950 SOUTH ELM AVE.
FRESNO, CA 93706

Project Name:
STUDENT SERVICES

Project Address:
WASHINGTON UNION HIGH SCHOOL
6041 SOUTH ELM AVE.
FRESNO, CA 93706

integrated designs
by SOMAM, Inc.

ARCHITECTURE
ENGINEERING
INTERIOR DESIGN

6011 N. FRESNO STREET, SUITE 130
FRESNO CALIFORNIA 93710
P:(559) 436-0881 F:(559) 436-0887
E: design@somam.com
integrateddesigns.com

Ownership of Documents
This document, the ideas and designs incorporated herein, as an instrument of Professional Service is the property of Integrated Designs by SOMAM Inc. and is not to be used, in whole or in part for any other project without written authorization.
© COPYRIGHT 2024

Stamp:
LICENSED ARCHITECT FELIPE CEBALLOS No. C 12834 REN. 8-31-25 STATE OF CALIFORNIA

Sheet Title:
INTERIOR DETAILS

Job No.:
5613

Sheet No.:
A8.01

Release: DSA SUBMITTAL 04-02-25

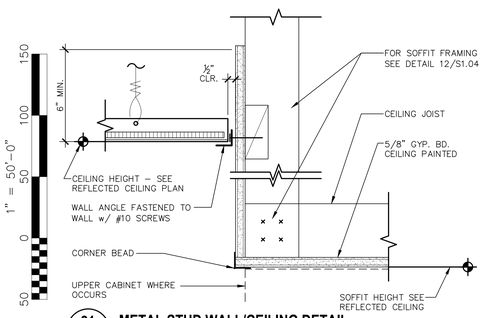

21 A8.02 METAL STUD WALL/CEILING DETAIL

ADC230–01 SCALE: 3" = 1'–0"

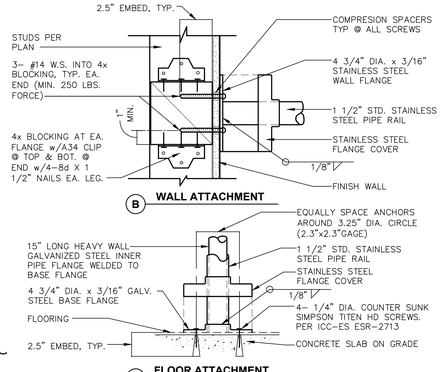

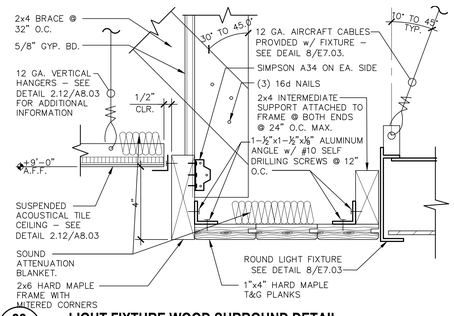

22 A8.02 LIGHT FIXTURE WOOD SURROUND DETAIL

ADL140–02 SCALE: 3" = 1'–0"

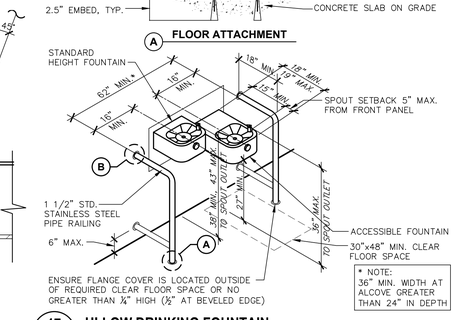

17 A8.02 HI-LOW DRINKING FOUNTAIN

ADA000–15 SCALE: 1/2" = 1'–0"

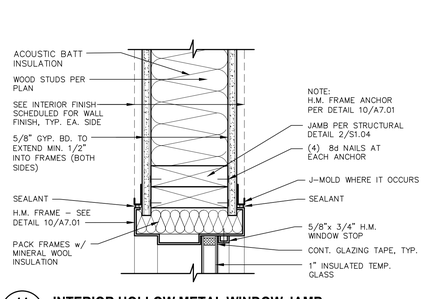

11 A8.02 INTERIOR HOLLOW METAL WINDOW JAMB

ADG244–02 SCALE: 3" = 1'–0"

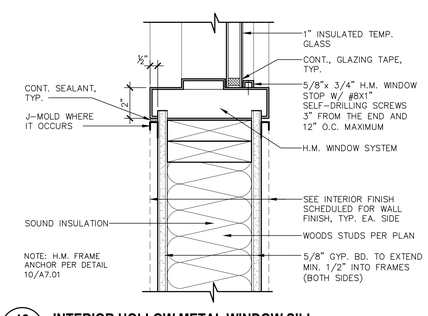

12 A8.02 INTERIOR HOLLOW METAL WINDOW SILL

ADG244–03 SCALE: 3" = 1'–0"

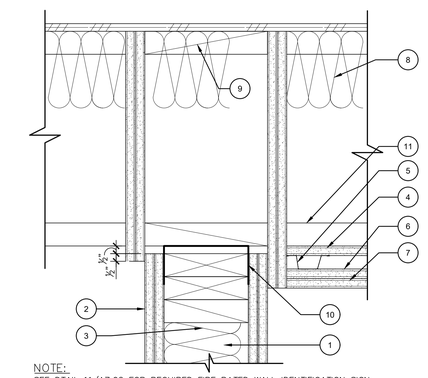

14 A8.02 2HR FIRE RATED SEPARATION WALL

ADF144–01 SCALE: 3" = 1'–0"

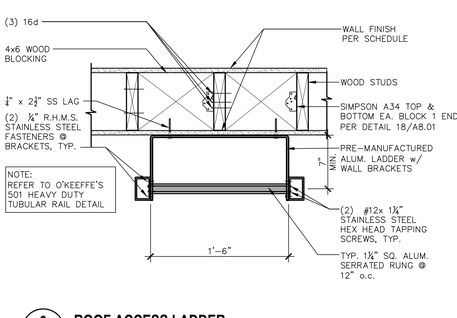

6 A8.02 ROOF ACCESS LADDER

ADH234–01 SCALE: 1 1/2" = 1'–0"

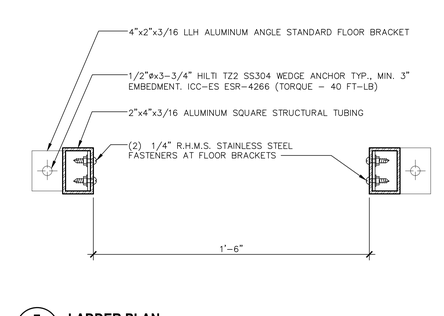

7 A8.02 LADDER PLAN

ADH234–02 SCALE: 3" = 1'–0"

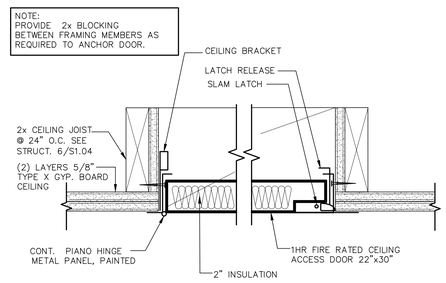

8 A8.02 1 HR. FIRE RATED CEILING ACCESS DOOR

ADC234–07 SCALE: 3" = 1'–0"

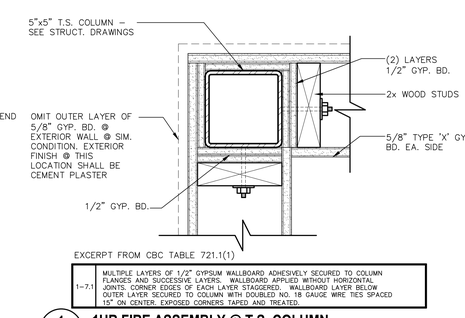

1 A8.02 1HR FIRE ASSEMBLY @ T.S. COLUMN

ADF144–01 SCALE: 3" = 1'–0"

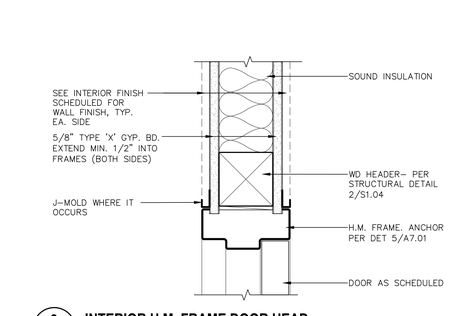

2 A8.02 INTERIOR H.M. FRAME DOOR HEAD

ADD245–02 SCALE: 3" = 1'–0"

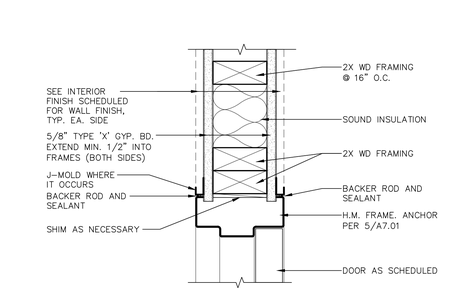

3 A8.02 INTERIOR H.M. FRAME DOOR JAMB

ADD245–01 SCALE: 3" = 1'–0"

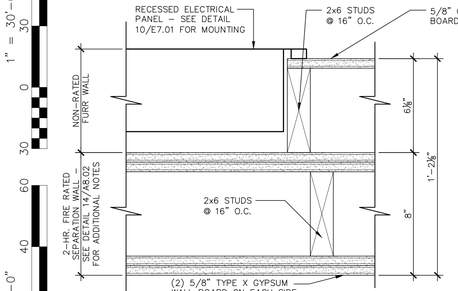

23 A8.02 RECESSED ELECTRICAL PANEL (PLAN VIEW)

FILENAME SCALE: 3" = 1'–0"

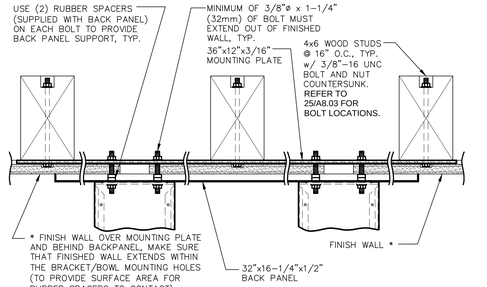

18 A8.02 DRINKING FOUNTAIN SUPPORT

ADM141–01 SCALE: 3" = 1'–0"

5 A8.02 ROOF ACCESS LADDER ELEVATION

ADH230–01 SCALE: 3/8" = 1'–0"

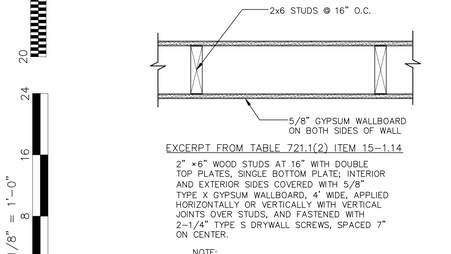

24 A8.02 1HR RATED WALL CONSTRUCTION

ADW244–04 SCALE: 1 1/2" = 1'–0"

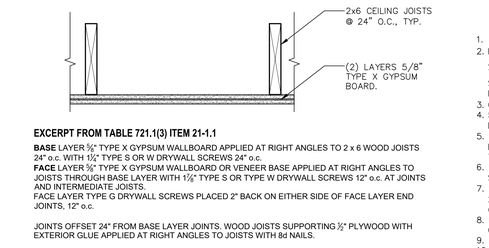

19 A8.02 1HR RATED CEILING CONSTRUCTION

ADC244–01 SCALE: NO SCALE

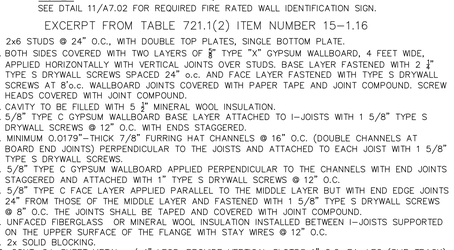

15 A8.02 WALL AT GLAZING

ADG240–01 SCALE: 3" = 1'–0"

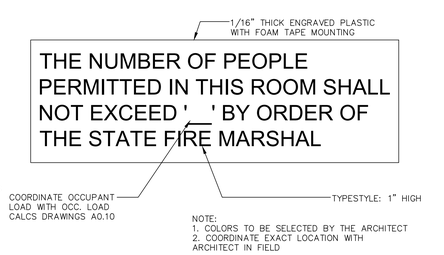

10 A8.02 INTERIOR HOLLOW METAL WINDOW HEAD

ADG244–01 SCALE: 3" = 1'–0"

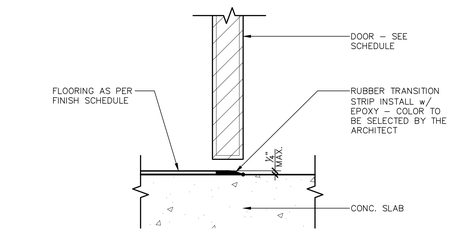

9 A8.02 OCCUPANT LOAD SIGN

ADX200–02 SCALE: 3" = 1'–0"

4 A8.02 INTERIOR DOOR THRESHOLD

ADI200–21 SCALE: 3" = 1'–0"

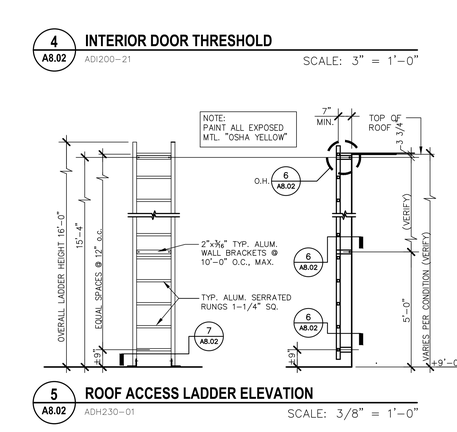

25 A8.02 MIRROR MOUNTING DETAIL

ADI244–16 SCALE: 3" = 1'–0"

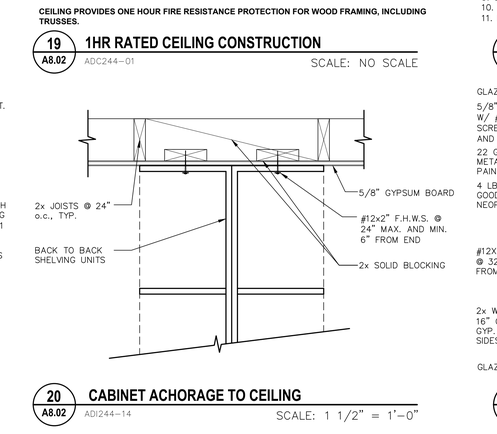

20 A8.02 CABINET ACHORAGE TO CEILING

ADI244–14 SCALE: 1 1/2" = 1'–0"

IDENTIFICATION STAMP
DIV. OF THE STATE ARCHITECT
APP: 02-123307 INC:
REVIEWED FOR
SS ☑ FLS ☑ ACS ☑
DATE: 10/15/2025

Owner:

WASHINGTON UNIFIED SCHOOL DISTRICT

7950 SOUTH ELM AVE.
FRESNO, CA 93706

Project Name:

STUDENT SERVICES

Project Address:

WASHINGTON UNION HIGH SCHOOL

6041 SOUTH ELM AVE.
FRESNO, CA 93706

integrated designs
by SOMAM, Inc.

ARCHITECTURE
ENGINEERING
INTERIOR DESIGN

6011 N. FRESNO STREET, SUITE 130
FRESNO CALIFORNIA 93710
P:(559) 436-0881 F:(559) 436-0887
E: design@somam.com
integrateddesigns.com

Ownership of Documents
This document, the ideas and designs incorporated herein, as an instrument of Professional Service is the property of Integrated Designs by SOMAM Inc. and is not to be used, in whole or in part for any other project without written authorization.
© COPYRIGHT 2024

Stamp:

LICENSED ARCHITECT – ELYSE CEBALLOS – No. C 12834 – 8-31-25 – STATE OF CALIFORNIA

Sheet Title:

INTERIOR DETAILS

Job No.: **5613**

Sheet No.: **A8.02**

Release: DSA SUBMITTAL 04-02-25

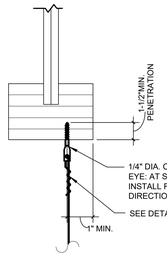

NOTE:
WHEN FIRE RATED GYP. BOARD IS INSTALLED ON THE BOTTOM FLANGES USE SCREW EYES w/ SUFFICIENT LENGTH TO AVOID DAMAGING THE FIRE RATED GYP. BOARD AND MEET MIN. PENETRATION.

4.26 / A8.03 HANGER WIRE CONNECTION TO WOOD I- JOIST

4.26 REFERENCE: DSA IR 25.2 REV. 1/17/25 SCALE: 1" = 1'-0"

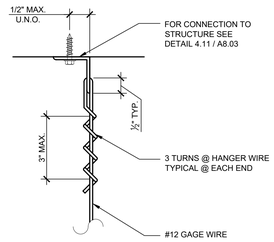

HANGER WIRE

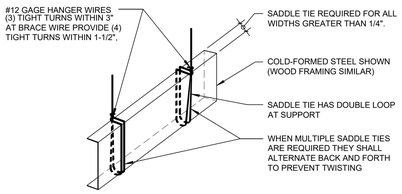

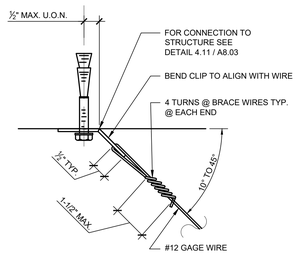

BRACING WIRE

4.29 / A8.03 TYPICAL SADDLE TIE DETAIL

4.29 REFERENCE: DSA IR 25.2 REV. 1/17/25 SCALE: 1" = 1'-0"

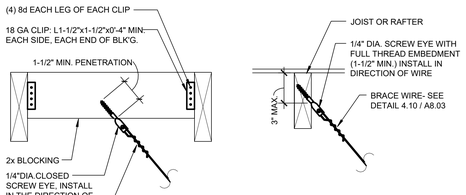

4.10 / A8.03 HANGER AND BRACING WIRE CONNECTION - TYPICAL WIRE TURNS

DSA 4.10 REFERENCE: DSA IR 25.2 REV. 1/17/25 SCALE: 6" = 1'-0"

STRUCTURAL CONDITION OF FLOOR/ROOF ABOVE SUSPEDED CEILING	APPLICABLE HANGER WIRE DETAIL	APPLICABLE BRACING WIRE DETAIL
~~METAL DECK~~	~~4.20~~	~~4.30~~
CONCRETE OVER METAL DECK	4.21	4.31
CONCRETE SLAB, BEAM, OR JOIST	4.22	4.32
~~STRUCTURAL STEEL~~	~~4.23~~	~~4.33~~
~~METAL STUD WALL~~	~~4.24~~	~~4.34~~
SAWN TIMBER	4.25/A8.03 & 4.29/A8.03	4.35/A8.03
WOOD I JOIST	4.26/A8.03	4.36/A8.04 AND 4.37/A8.04
~~WOOD CHORD TRUSS~~	~~4.27, 4.29~~	~~4.38, 4.29~~
~~OPEN WEB STEEL JOIST~~	~~4.28, 4.29~~	~~4.39, 4.29~~

4.11 / A8.03 HANGER AND BRACING WIRE CONNECTION MATRIX

4.11 REFERENCE: DSA IR 25.2 REV. 1/17/25 SCALE: 1" = 1'-0"

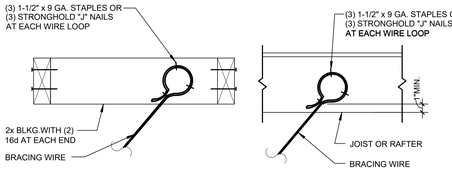

4.35 / A8.03 BRACE WIRE CONNECTION TO SAWN TIMBER

4.35 REFERENCE: DSA IR 25.2 REV. 1/17/25 SCALE: 1" = 1'-0"

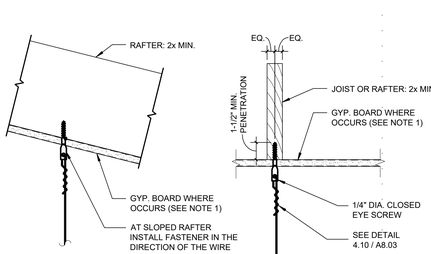

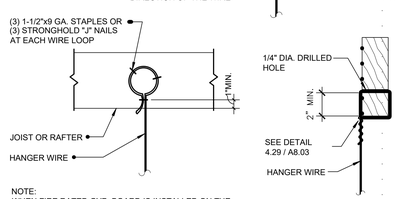

NOTE:
WHEN FIRE RATED GYP. BOARD IS INSTALLED ON THE BOTTOM FLANGES, USE SCREW EYES w/ SUFFICIENT LENGTH TO AVOID DAMAGING THE FIRE RATED GYP. BOARD AND MEET MIN. PENETRATION.

4.25 / A8.03 HANGER WIRE CONNECTION TO SAWN TIMBER

4.25 REFERENCE: DSA IR 25.2 REV. 1/17/25 SCALE: 1" = 1'-0"

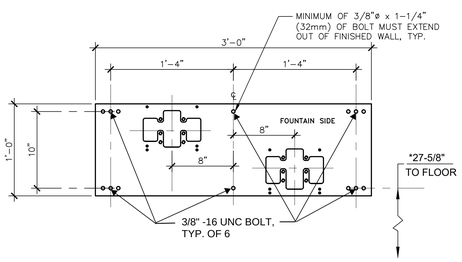

25 / A8.03 MOUNTING PLATE

ADM141-02 SCALE: 1 1/2" = 1'-0"

NOTES:
1. MACHINE BOLT IS NOT REQUIRED ON OPTION 3.
2. OPTION 3 IS PERMITTED ONLY WHERE THE ROOF OR FLOOR STRUCTURE IS SAWN TIMBER WITHOUT GYPSUM BOARD.
3. DIMENSION "L" SHALL NOT TO EXCEED THE ALLOWABLE LENGTH GIVE IN THE TABLE ON 3.21 / A8.03 FOR THE COMPRESSION STRUT USED.

3.20 / A8.03 COMPRESSION STRUT - EMT TYPE

3.20 REFERENCE: DSA IR 25.2 REV. 1/17/25 SCALE: 1" = 1'-0"

COMPRESSION STRUT TABLE

EMT COMPRESSION STRUT	MAXIMUM LENGTH
1/2" DIAMETER EMT (0.042" WALL THICKNESS)	3'-11"
3/4" DIAMETER EMT (0.049" WALL THICKNESS)	6'-4"
1" DIAMETER EMT (0.057" WALL THICKNESS)	9'-9"
1 1/4" DIAMETER EMT (0.065" WALL THICKNESS)	12'-9"
1 1/2" DIAMETER EMT (0.065" WALL THICKNESS)	14'-9"
2" DIAMETER EMT (0.065" WALL THICKNESS)	18'-10"

3.21 / A8.03 COMPRESSION STRUT TABLE

3.21 REFERENCE: DSA IR 25.2 REV. 1/17/25 SCALE: 6" = 1'-0"

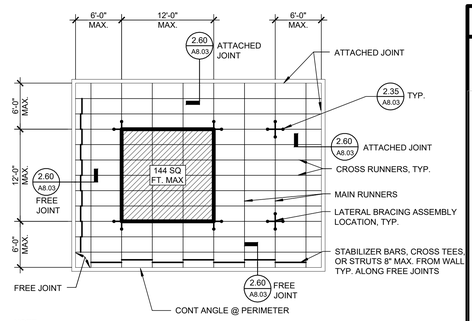

NOTE:
BRACING WIRES AND COMP. STRUT SHALL OCCUR AT EVERY 144 SQ. FT. MAX. IN ROOMS OVER 144 SQ. FT.

2.12 / A8.03 TYP. CEILING PLAN FOR 12' - 0" x 12' - 0" BRACE ASSEMBLY SPACING

2.12 REFERENCE: DSA IR 25.2 REV. 1/17/25 SCALE: 1" = 1'-0"

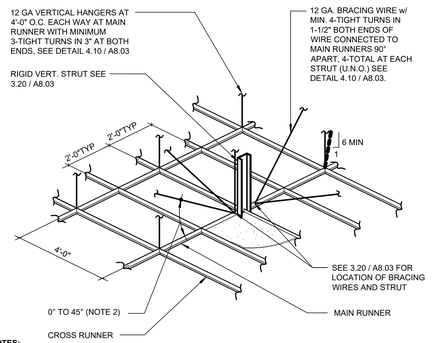

NOTES:
1. STRUTS SHALL NOT REPLACE HANGER WIRES.
2. THE MINIMUM ACCEPTABLE ANGLE IS DETERMINED SUCH THAT THE WIRES DO NOT INTERFERE WITH THE RUNNERS, LIGHT FIXTURES, ETC. AND REMAIN STRAIGHT AND UNOBSTRUCTED.

2.35 / A8.03 SUSPENSION AND LATERAL BRACING ASSEMBLY

2.35 REFERENCE: DSA IR 25.2 REV. 1/17/25 SCALE: 1" = 1'-0"

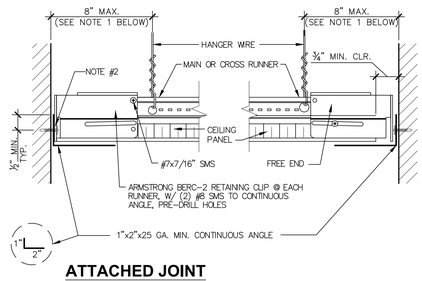

ATTACHED JOINT

NOTES:
1. PROVIDE #12 GAGE HANGER WIRES AT THE END OF ALL MAIN AND CROSS RUNNERS WITHIN EIGHT (8) INCHES OF THE LENGTH OF THE END TEE, WHICHEVER IS LESS, FOR THE PERIMETER OF THE CEILING AREA. PERIMETER WIRES ARE NOT REQUIRED WHEN THE LENGTH OF THE END TEE IS EIGHT (8) INCHES OR LESS.
2. #10 x 2" LONG WOOD SCREW AT 16" O.C. MAX

2.60 / A8.03 CEILING PERIMETER

2.60 REFERENCE: DSA IR 25.2 REV. 1/17/25 SCALE: 6" = 1'-0"

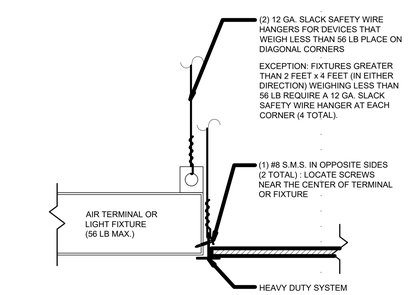

2.80 / A8.03 LUMINAIRE / AIR TERMINAL SUPPORT

2.80 REFERENCE: DSA IR 25.2 REV. 1/17/25 SCALE: 1" = 1'-0"

CEILING SYSTEM GENERAL NOTES

DSA IR 25-2 Revised 01/17/25 Under CBC 2022
SUSPENDED LAY-IN PANEL CEILING: 2022 CBC

IR 25-2
SUSPENDED LAY-IN PANEL CEILING: 2022 CBC

1. CEILING SYSTEM GENERAL NOTES

1.01 Ceiling system components shall comply with ASTM C635 and Section 5.1 of ASTM E580.

1.02 The ceiling grid system shall be rated heavy duty as defined by ASTM C635.

1.03 Ceiling systems. The following ceiling system(s) is/are part of the scope of this project:

Manufacturer:	ARMSTRONG
Product Name:	PRELUDE 15/16 EXPOSED TEE
Evaluation Report Number:	SUSPENSION SYSTEM 1308
Main Runner Part, Model, or Catalog Number:	A7200
Cross Runner Part, Model, or Catalog Number:	XL7100

1.04 Seismic Wall Clip:

Manufacturer's Model:	BERC CLIP

1.05 Ceiling panels shall not support any luminaires, air terminals, or devices.

1.06 For acoustical tile panels of any material other than mineral or glass fiber, a ¾" clearance shall be provided between the panel and the wall on the sides of the ceiling free to slip. Clearance between ceiling grid runners and walls shall comply with the details on these drawings regardless of ceiling tile material.

2. MATERIALS

2.01 Ceiling wire shall be Class 1 zinc coated (galvanized) carbon steel conforming to ASTM A641. Wire shall be #12 gauge (0.106" diameter) with soft temper and minimum ultimate tensile strength = 70 ksi.

2.02 Galvanized sheet steel (including that used for metal stud compression struts) shall conform to ASTM A653, or other equivalent sheet steel listed in Section A3.1 of the North American Specification for the Design of Cold-Formed Steel Structural Members, (AISI S100). Material 43 mil (18 gauge) thick and lighter shall have minimum yield strength of 33 ksi. Material 54 mil (16 gauge) thick and heavier shall have a minimum yield strength of 50 ksi.

2.03 Electrical metallic tube (EMT) shall conform to ANSI C80.3/UL 797 carbon steel with G90 galvanizing. EMT shall have minimum yield strength of 30 ksi and minimum ultimate strength of 48 ksi.

3. ATTACHMENT OF HANGER AND BRACING WIRES

3.01 All ceiling hanger and bracing wires shall be separated at least 6 inches from all unbraced ducts, pipes, conduit, etc.

3.02 Hanger and bracing wires shall not attach to or bend around obstructions including but not limited to piping, ductwork, conduit, and equipment.

3.03 Hanger wires that are more than one (horizontal) in six (vertical) out of plumb shall have counter-sloping wires.

Detail Title:	REV: 09/21/2015	Detail No.
CEILING NOTES	REV: 03/2022	1.00
	REV: 11/2023	

IR 25-2 (Revised 01/17/25) Page 17 of 70
DIVISION OF THE STATE ARCHITECT DEPARTMENT OF GENERAL SERVICES STATE OF CALIFORNIA

IR 25-2
SUSPENDED LAY-IN PANEL CEILING: 2022 CBC

3.04 Slack safety wires shall be considered hanger wires for installation and testing requirements.

3.05 Hanger and bracing wire anchorage to the structure shall be installed such that the direction of the anchorage aligns with the direction of the wire. Bracing wire ceiling clips shall be bent as shown in the details and rotated as required to align with the direction of the wire. Screws in wood shall be installed to align with the direction of the wire.

4. FASTENERS AND WELDING

4.01 Sheet metal screws shall comply with ASTM C1513 and ASME B18.6.3. Penetration of screws through joined material shall not be less than three exposed threads.

6. LUMINAIRES

6.01 All luminaires shall be positively attached to the ceiling suspension systems by mechanical means to resist a horizontal force equal to the weight of the luminaire. A minimum of two screws or approved fasteners are required at each luminaire per ASTM E580 Section 5.3.1.

6.02 Surface-mounted luminaires shall be attached to the main runner with at least two positive clamping devices. The clamping device shall completely surround the supporting ceiling runner and be made of steel with a minimum thickness of #14 gauge. Rotational spring catches are not permitted. A #12 gauge slack safety wire shall be connected from each clamping device to the structure above. Additional supports shall be provided when a luminaire is 8 feet or longer or exceeds 56 pounds. Maximum spacing between supports shall not exceed 8 feet.

Detail Title:	REV: 09/21/2015	Detail No.
CEILING NOTES	REV: 03/2022	1.00
	REV: 11/2023	

IR 25-2 (Revised 01/17/25) Page 18 of 70
DIVISION OF THE STATE ARCHITECT DEPARTMENT OF GENERAL SERVICES STATE OF CALIFORNIA

IR 25-2
SUSPENDED LAY-IN PANEL CEILING: 2022 CBC

6.03 Luminaires weighing less than or equal to 10 pounds supported directly on the ceiling runners shall have a minimum of one #12 gauge slack safety wire connected from the fixture housing to the structure above.

6.04 Luminaires weighing greater than 10 pounds but less than or equal to 56 pounds supported directly on the ceiling runners shall have a minimum of two #12 gauge slack safety wires connected from the fixture housing at diagonal corners to the structure above.

Exception: All luminaires greater than two by four feet weighing less than 56 pounds shall have a #12 gauge slack safety wire at each corner.

6.05 All luminaires weighing greater than 56 pounds shall be independently supported from the structure above. See support details on these drawings for more information.

7. SERVICES WITHIN THE CEILING

7.01 All flexible sprinkler hose fitting mounting brackets, ceiling-mounted air terminals, or other services shall be positively attached to the ceiling suspension systems by mechanical means. Screws or other fasteners specified on the drawings are required. A minimum of two attachments are required at each component.

7.02 Ceiling-mounted services weighing less than or equal to 20 pounds shall have one #12 gauge slack safety wire attached from the terminal or service to the structure above.

7.03 Ceiling-mounted services weighing more than 20 pounds but less than or equal to 56 pounds shall have two #12 gauge slack safety wires (at diagonal corners) connected from the terminal or service to the structure above.

7.04 Ceiling-mounted services weighing more than 56 pounds shall be independently supported from the structure above. See support details on these drawings for more information.

8. OTHER DEVICES WITHIN THE CEILING

8.01 All lightweight miscellaneous devices, such as strobe lights, occupancy sensors, speakers, exit signs, etc., shall be attached to the ceiling grid. Devices weighing more than 10 pounds shall have a #12 gauge slack safety wire anchored to the structure above. Devices weighing more than 20 pounds shall be independently supported from the structure above.

Detail Title:	REV: 09/21/2015	Detail No.
CEILING NOTES	REV: 03/2022	1.00
	REV: 11/2023	

IR 25-2 (Revised 01/17/25) Page 19 of 70
DIVISION OF THE STATE ARCHITECT DEPARTMENT OF GENERAL SERVICES STATE OF CALIFORNIA

IDENTIFICATION STAMP
DIV. OF THE STATE ARCHITECT
APP: 02-123307 INC:
REVIEWED FOR
SS ☑ FLS ☑ ACS ☑
DATE: 10/15/2025

Owner:
WASHINGTON UNIFIED SCHOOL DISTRICT

WASHINGTON UNIFIED SCHOOL DISTRICT
7950 SOUTH ELM AVE.
FRESNO, CA 93706

Project Name:
STUDENT SERVICES

Project Address:
WASHINGTON UNION HIGH SCHOOL
6041 SOUTH ELM AVE.
FRESNO, CA 93706

integrated designs
by SOMAM, Inc.

ARCHITECTURE
ENGINEERING
INTERIOR DESIGN

6011 N. FRESNO STREET, SUITE 130
FRESNO CALIFORNIA 93710
P:(559) 436-0881 F:(559) 436-0887
E: design@somam.com
integrateddesigns.com

Ownership of Documents
This document, the ideas and designs incorporated herein, as an instrument of Professional Service is the property of Integrated Designs by SOMAM Inc. and is not to be used, in whole or in part for any other project without written authorization.
© COPYRIGHT 2024

Stamp:
LICENSED ARCHITECT FELIPE CEBALLOS No. C 12834 Exp. 8-31-25 STATE OF CALIFORNIA

Sheet Title:
INTERIOR DETAILS

Job No.:
5613

Sheet No.:
A8.03

Release: DSA SUBMITTAL 04-02-25

G:\2023\rs\23-5613 WASHINGTON UNION HIGH SCHOOL - STUDENT SERVICES\Sheets\5613-A8.03 INTERIOR DETAILS.dwg FRANK AYALA 9/19/25

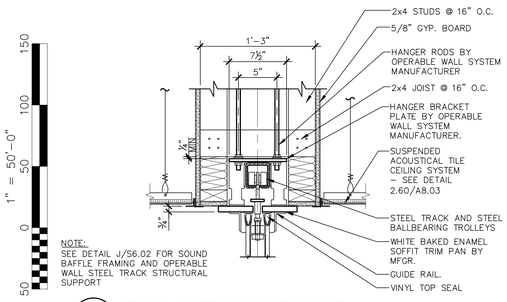

NOTE:
SEE DETAIL J/S6.02 FOR SOUND BAFFLE FRAMING AND OPERABLE WALL STEEL TRACK STRUCTURAL SUPPORT

21 A8.04 TRACK SYSTEM BRACKET MOUNT

ADM244-07 SCALE: 1 1/2" = 1'-0"

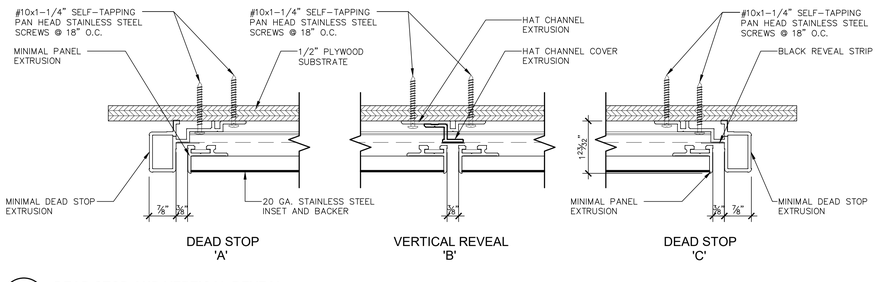

DEAD STOP 'A' | VERTICAL REVEAL 'B' | DEAD STOP 'C'

16 A8.04 DEAD STOP AND VERTICAL REVEAL

ADZ233-05 SCALE: 6" = 1'-0"

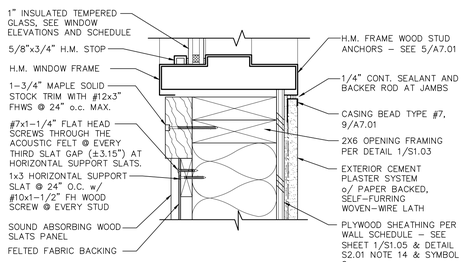

22 A8.04 SOUND ABSORBING PANELS @ WINDOW SILL

ADW240-07 SCALE: 3" = 1'-0"

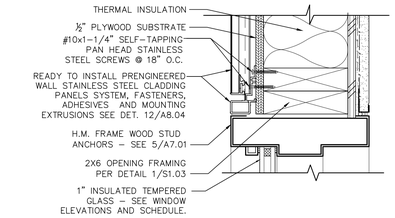

17 A8.04 S.S. CLAD PANEL @ WINDOW JAMB

ADW240-09 SCALE: 3" = 1'-0"

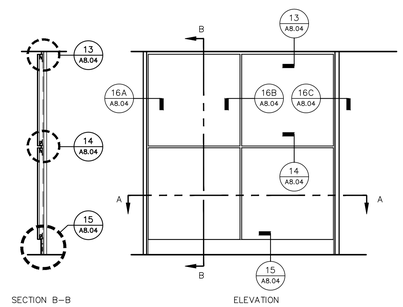

SECTION B–B ELEVATION

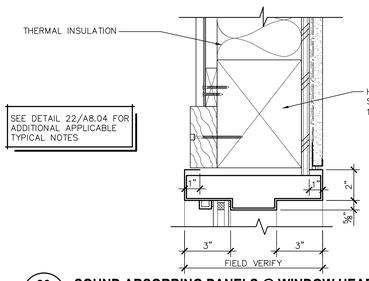

23 A8.04 SOUND ABSORBING PANELS @ WINDOW HEAD

ADW240-08 SCALE: 3" = 1'-0"

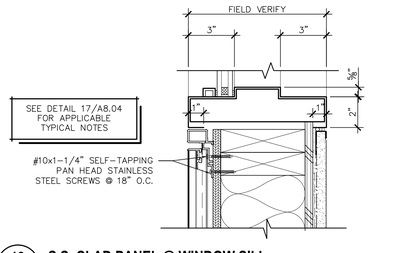

18 A8.04 S.S. CLAD PANEL @ WINDOW SILL

ADW240-10 SCALE: 3" = 1'-0"

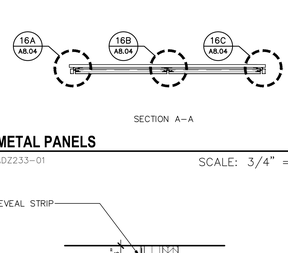

SECTION A–A

12 A8.04 METAL PANELS

ADZ233-01 SCALE: 3/4" = 1'-0"

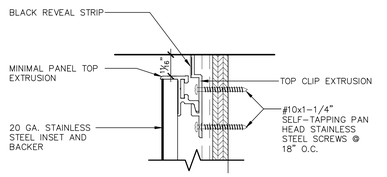

13 A8.04 METAL PANEL HEAD

ADZ233-02 SCALE: 6" = 1'-0"

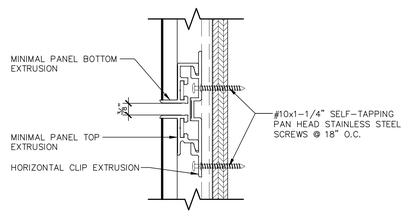

14 A8.04 METAL PANEL - HORIZONTAL REVEAL

ADZ233-04 SCALE: 6" = 1'-0"

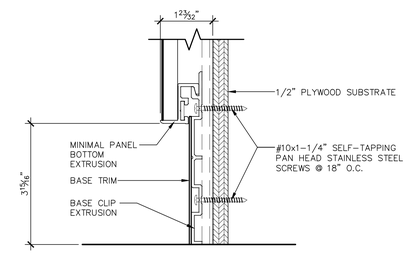

15 A8.04 METAL PANEL BASE

ADZ233-03 SCALE: 6" = 1'-0"

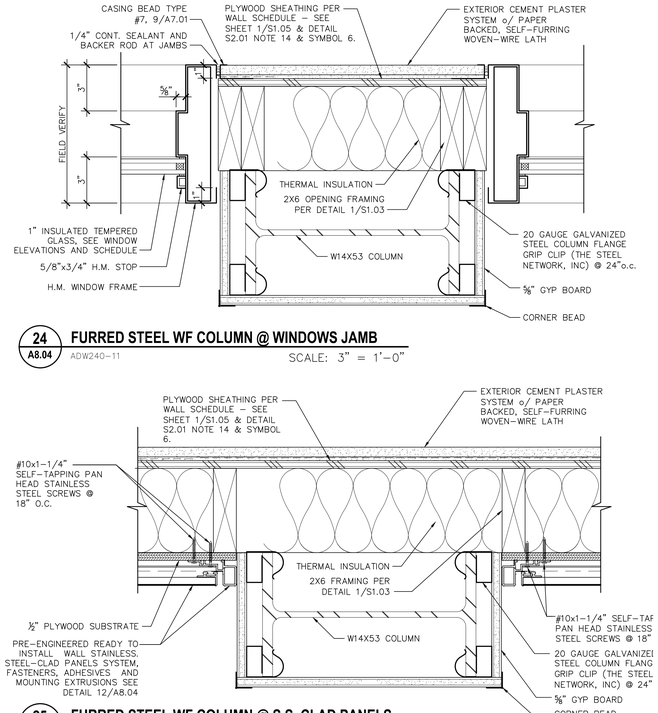

24 A8.04 FURRED STEEL WF COLUMN @ WINDOWS JAMB

ADW240-11 SCALE: 3" = 1'-0"

25 A8.04 FURRED STEEL WF COLUMN @ S.S. CLAD PANELS

ADW240-12 SCALE: 3" = 1'-0"

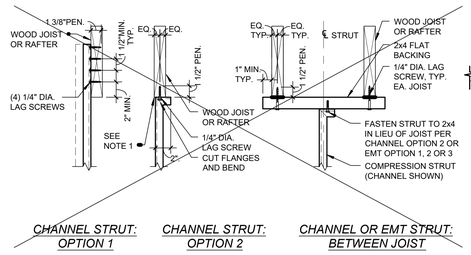

CHANNEL STRUT: OPTION 1 | CHANNEL STRUT: OPTION 2 | CHANNEL OR EMT STRUT: BETWEEN JOIST

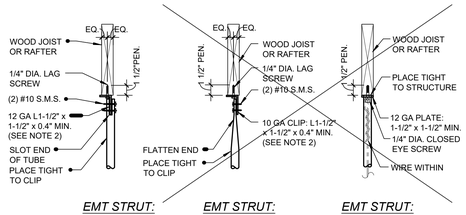

EMT STRUT: OPTION 1 | EMT STRUT: OPTION 2 | EMT STRUT: OPTION 3

NOTES:
1. WEB OF CHANNEL TO BEAR WITHIN WIDTH OF WOOD MEMBER.
2. VERTICAL LEG OF MEMBER TO FALL WITHIN THE WIDTH OF THE WOOD MEMBER.
3. NOT USED.
4. PEN. = MINIMUM PENETRATION OF LAG SCREW THREADS INTO THE WOOD MEMBER.
5. NO. 14 WOOD SCREW MAY BE USED IN LIEU OF 1/4" LAG SCREW.

5.51 A8.04 STRUT CONNECTION TO SAWN TIMBER w/o GYPSUM BOARD

5.51 REFERENCE: DSA IR 25.2 REV. 1/17/25 SCALE: 1' = 1'-0"

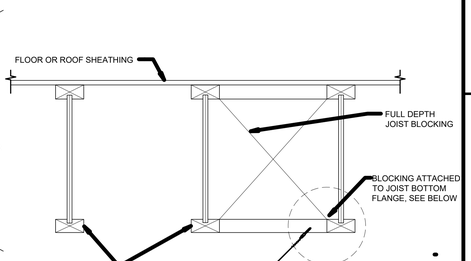

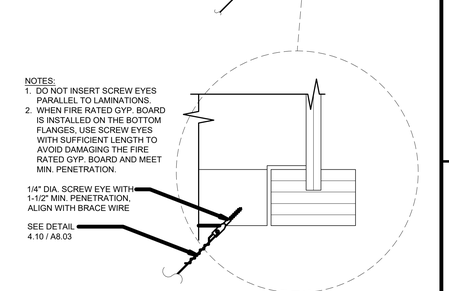

4.36 A8.04 BRACE WIRE CONNECTION TO WOOD I-JOIST

4.36 REFERENCE: DSA IR 25.2 REV. 1/17/25 SCALE: 1' = 1'-0"

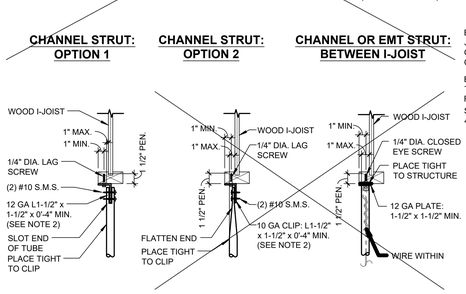

CHANNEL STRUT: OPTION 1 | CHANNEL STRUT: OPTION 2 | CHANNEL OR EMT STRUT: BETWEEN I-JOIST

EMT STRUT: OPTION 1 | EMT STRUT: OPTION 2 | EMT STRUT: OPTION 3

NOTES:
1. WEB OF CHANNEL TO BEAR WITHIN WIDTH OF WOOD MEMBER.
2. VERTICAL LEG OF MEMBER TO FALL WITHIN THE WIDTH OF THE WOOD MEMBER.
3. NOT USED.
4. PEN. = MINIMUM PENETRATION OF LAG SCREW THREADS INTO THE WOOD MEMBER.
5. NO. 14 WOOD SCREW MAY BE USED IN LIEU OF 1/4" LAG SCREW.

5.52 A8.04 STRUT CONNECTION TO I-JOIST

5.52 REFERENCE: DSA IR 25.2 REV. 1/17/25 SCALE: 1' = 1'-0"

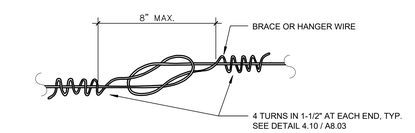

HANGER OR BRACE WIRE

NOTES:
1. WIRE SPLICES ARE SHOWN LOOSELY TIED FOR ILLUSTRATIVE PURPOSES ONLY AND SHALL BE DRAWN TIGHT TO COMPLETE INSTALLATION WHEN CONSTRUCTED.
2. WIRE LOOPS SHALL BE TIGHTLY WRAPPED AND SHARPLY BENT TO PREVENT ANY VERTICAL MOVEMENT OR ROTATION WITHIN THE LOOPS.
3. EACH HANGER AND BRACE WIRE SHALL BE SPLICED NO MORE THAN ONCE ALONG ITS LENGTH.

6.10 A8.04 CEILING WIRE SPLICES

6.10 REFERENCE: DSA IR 25.2 REV. 1/17/25 SCALE: 1' = 1'-0"

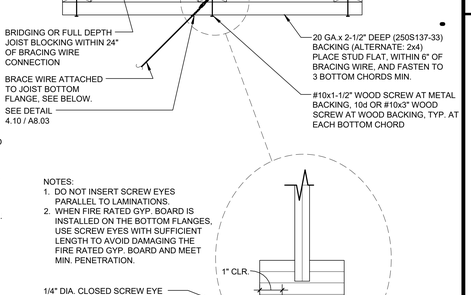

4.37 A8.04 BRACE WIRE CONNECTION TO WOOD I-JOIST

4.37 REFERENCE: DSA IR 25.2 REV. 1/17/25 SCALE: 1' = 1'-0"

STRUCTURAL SYSTEM OF FLOOR / ROOF ABOVE SUSPENDED CEILING	APPLICABLE DETAIL
~~BARE METAL DECK~~	~~5.20~~
~~CONCRETE OVER METAL DECK~~	~~5.21~~
~~CONCRETE SLAB,BEAM,OR JOIST~~	~~5.30~~
~~STRUCTURAL STEEL~~	~~5.40~~
~~SAWN TIMBER WITH GYPSUM BOARD~~	~~5.50~~
~~SAWN TIMBER WITHOUT GYPSUM BOARD~~	~~5.51~~
WOOD I-JOIST	5.52

5.10 A8.04 COMPRESSION STRUT CONNCECTION TABLE

5.10 REFERENCE: DSA IR 25.2 REV. 1/17/25 SCALE: 1' = 1'-0"

IDENTIFICATION STAMP
DIV. OF THE STATE ARCHITECT
APP: 02-123307 INC:
REVIEWED FOR
SS ☑ FLS ☑ ACS ☑
DATE: 10/15/2025

Owner:
WASHINGTON UNIFIED SCHOOL DISTRICT

WASHINGTON UNIFIED SCHOOL DISTRICT
7950 SOUTH ELM AVE.
FRESNO, CA 93706

Project Name:
STUDENT SERVICES

Project Address:
WASHINGTON UNION HIGH SCHOOL
6041 SOUTH ELM AVE.
FRESNO, CA 93706

integrated designs
by SOMAM, Inc.

ARCHITECTURE
ENGINEERING
INTERIOR DESIGN

6011 N. FRESNO STREET, SUITE 130
FRESNO CALIFORNIA 93710
P:(559) 436-0881 F:(559) 436-0887
E: design@somam.com
integrateddesigns.com

Ownership of Documents
This document, the ideas and designs incorporated herein, as an instrument of Professional Service is the property of Integrated Designs by SOMAM Inc. and is not to be used, in whole or in part for any other project without written authorization.
© COPYRIGHT 2024

Stamp:
LICENSED ARCHITECT KEITH CEBALLOS No. C 12834 REN. 8-31-25 STATE OF CALIFORNIA

Sheet Title:
INTERIOR DETAILS

Job No.: **5613**

Sheet No.: **A8.04**

Release: DSA SUBMITTAL 04-02-25

MATERIAL SPECIFICATIONS

GENERAL

ALL WORK SHALL CONFORM TO THE REQUIREMENTS OF THE GOVERNING CODE. SEE 'PROJECT DATA'

CONSTRUCTION LIABILITY
THE CONSTRUCTION CONTRACTOR AND HIS SUBCONTRACTORS AGREE THAT IN ACCORDANCE WITH GENERALLY ACCEPTED CONSTRUCTION PRACTICES, THE CONSTRUCTION CONTRACTOR AND HIS SUBCONTRACTORS WILL BE REQUIRED TO ASSUME SOLE AND COMPLETE RESPONSIBILITY FOR JOB SITE CONDITIONS DURING THE COURSE OF CONSTRUCTION OF THE PROJECT, INCLUDING SAFETY OF ALL PERSONS AND PROPERTY; THAT THIS REQUIREMENT SHALL BE MADE TO APPLY CONTINUOUSLY AND NOT LIMITED TO NORMAL WORKING HOURS, AND THE CONSTRUCTION CONTRACTOR AND HIS SUBCONTRACTORS FURTHER AGREE TO DEFEND, INDEMNIFY AND HOLD THE DESIGN PROFESSIONAL HARMLESS FROM ANY LIABILITY; REAL OR ALLEGED, IN CONNECTION WITH THE PERFORMANCE OF WORK ON THIS PROJECT, EXCEPT LIABILITY ARISING FROM THE SOLE NEGLIGENCE OF THE DESIGN PROFESSIONAL.

CONCRETE & REINFORCING

REINFORCING STEEL
REBAR SHALL CONFORM TO ASTM A706 GRADE 60 OR ASTM A615 GRADE 60. ASTM A615 GRADE 60 REQUIRES 80,000 PSI MINIMUM TENSILE STRENGTH WITH 1.10 MINIMUM RATIO OF ACTUAL TENSILE STRENGTH TO ACTUAL YIELD STRENGTH BASED ON MILL TESTING. LAP SPLICES SHALL BE IN ACCORDANCE WITH ACI 318, CURRENT EDITION UNLESS NOTED OTHERWISE ON THE PLANS. BARS TO BE WELDED OR FIELD BENT SHALL CONFORM TO ASTM A706.

CONCRETE
CONCRETE SHALL BE CONSTRUCTED IN ACCORDANCE WITH THE **2019** EDITION OF
ACI 301 & 318. CONCRETE SHALL BE READY-MIXED CONCRETE IN ACCORDANCE WITH ASTM C94.

MAXIMUM WATER-CEMENT RATIO, BY WEIGHT

28 DAY COMPRESSIVE STRENGTH	WATER-CEMENT RATIO
3500 PSI CONCRETE	0.45
3000 PSI CONCRETE	0.50

AVERAGE DRYING SHRINKAGE FOR CONCRETE AFTER 21 DAYS OF DRYING SHALL NOT EXCEED 0.040% IN SUSPENDED SLABS AND 0.048% IN SLABS ON GRADE.

AT THE CONTRACTOR'S OPTION, AN AIR ENTRAINING AGENT CONFORMING TO THE LATEST REVISION OF ASTM SPECIFICATION C260 MAY BE ADDED TO THE CONCRETE TO PROVIDE UP TO A MAXIMUM OF 3% ± 1.5% ENTRAINED AIR. CEMENT SHALL BE IN ACCORDANCE WITH THE STANDARD SPECIFICATIONS FOR PORTLAND CEMENT PER ASTM DESIGNATION C150, TYPE I. NO MORE THAN 15% BY WEIGHT OF CEMENT MAY BE REPLACED BY FLY ASH CONFORMING TO ASTM C618, CLASS N OR F.

CONCRETE ELEMENT	MIN 28 DAY COMPRESSIVE STRENGTH	MAX SIZE AGGREGATE (INCHES)	SLUMP (INCHES)
FOOTINGS	3000	1-1/2	3
SLABS ON GRADE	3500	1	4

SLUMP WILL BE MEASURED AT THE TRUCK DISCHARGE. SLUMPS NOTED ABOVE ARE FOR CONCRETE WITHOUT ADMIXTURES TO BE CONSOLIDATED USING VIBRATION. FORMWORK CONSTRAINTS, CONGESTION OF REBAR, AND PUMPING OF CONCRETE MAY REQUIRE INCREASED SLUMP BEYOND THE SLUMP LISTED ABOVE. THE CONTRACTOR SHALL ADJUST THE SLUMP UP TO 8" MAX USING ADMIXTURES AS NECESSARY TO PROVIDE WORKABILITY AND CONSISTENCY TO PERMIT CONCRETE TO BE WORKED READILY INTO FORMS AND AROUND REINFORCEMENT UNDER CONDITIONS OF PLACEMENT TO BE EMPLOYED WITHOUT SEGREGATION OR EXCESSIVE BLEEDING. ALL ADMIXTURES SHALL BE NOTED IN THE SUBMITTED MIX DESIGN AND ARE SUBJECT TO THE ENGINEER'S REVIEW. THE SPECIAL INSPECTOR SHALL BE PROVIDED WITH A BATCH TICKET AND WEIGHT TAG UPON DELIVERY OF EACH LOAD OF CONCRETE.

ALL CONCRETE SHALL BE PLACED WITH MECHANICAL VIBRATION UNLESS NOTED OTHERWISE.

EXPOSURE CATEGORIES AND CLASSES FOR ALL CONCRETE TYPES ARE AS FOLLOW:
A. FREEZING AND THAWING: CLASS: F0
B. SULFATE EXPOSURE: CLASS: S0
C. IN CONTACT WITH WATER: CLASS: W0
D. CORROSION PROTECTION OF REINFORCEMENT: CLASS: C1

SLAB MEMBRANE - 15 MIL POLYETHYLENE FILM, UNLESS NOTED OTHERWISE.

UNDER SLAB MATERIALS
SLAB MEMBRANE SHALL BE 15 MIL POLYETHYLENE FILM, UNLESS NOTED OTHERWISE. LAP SLAB MEMBRANE PER THE MANUFACTURER'S RECOMMENDATIONS, BUT NO LESS THAN 12 INCHES.

GRAVEL SHALL BE 3/4" CLEAN MATERIAL MEETING THE REQUIREMENTS OF ACI 302.1R.

NON-SHRINK GROUT
NON SHRINK GROUT SHALL BE FLOWABLE, WITH A MINIMUM 7 DAY COMPRESSIVE STRENGTH OF 5000 PSI. NON-SHRINK GROUT SHALL BE MASTERFLOW 928 GROUT AS MANUFACTURED BY BASF OR APPROVED EQUAL.

WOOD FRAMING

SAWN LUMBER
DOUGLAS FIR COAST REGION, CONFORMING TO WEST COAST LUMBER INSPECTION
BUREAU STANDARD GRADING AND DRESSING RULE No. 17, AS AMENDED TO DATE.

MOISTURE CONTENT SHALL BE LESS THAN 19% FROM THE TIME OF INSTALLATION
ONWARD.

1. 2x, 3x, 4x PLATES, JOISTS, PURLINS AND BEAMS, No. 1 & BETTER, UNLESS NOTED OTHERWISE ON THE DRAWINGS.
2. 2x, 3x, 4x PLATES, JOISTS, PURLINS AND BEAMS, SELECT STRUCTURAL, WHERE NOTED ON THE DRAWINGS.
3. 6x, & LARGER BEAMS, No. 1 WHEN BEAM WIDTH IS NOT MORE THAN 2" GREATER THAN THICKNESS, THE MEMBER SHALL CONFORM TO ITEM 6 BELOW.
4. 2x, 3x, 4x, LEDGERS, No. 1 UNLESS NOTED OTHERWISE ON THE DRAWINGS.
5. 4x4 AND 4x6 POSTS, No. 1 UNLESS NOTED OTHERWISE ON THE DRAWINGS.
6. 6x6 AND LARGER POSTS, DENSE No. 1, WHEN POST WIDTH IS MORE THAN 2" GREATER THAN THICKNESS, THE MEMBER SHALL CONFORM TO ITEM 3 ABOVE.
7. 2x, 3x, STUDS AND BLOCKING, No. 1
8. FOUNDATION PLATES: PRESSURE TREATED DOUGLAS FIR No. 1.

ALL FRAMING LUMBER 6" OR LARGER IN THE LEAST DIMENSION SHALL BE FOHC.

WOOD FRAMING PERMANENTLY EXPOSED TO WEATHER SHALL BE PRESSURE TREATED.

FASTENERS AND BOLT ASSEMBLIES IN PRESSURE TREATED LUMBER SHALL BE HOT DIPPED ZINC-COATED GALVANIZED STEEL IN COMPLIANCE WITH ASTM A 153.

BOLT HOLES SHALL BE 1/32" MIN TO 1/16" MAX LARGER THAN THE BOLT DIAMETER, U.N.O.

STRUCTURAL COMPOSITE LUMBER
COMPOSITE LUMBER SHALL BE IN CONFORMANCE WITH ASTM D5456 AND ICC ESR-1387. MEMBERS SHALL BE IDENTIFIED BY A STAMP INDICATING THE PRODUCT TYPE AND GRADE, ICC REPORT NUMBER, MANUFACTURER'S NAME, PLANT NUMBER, AND INSPECTION AGENCY'S LOGO.

REDLAM LVL: ICC ESR-2993
- GRADE: 2.0E
- Fb = 2900 PSI TYP, UNO
- Fv = 285 PSI
- E = 2.0 x 10^6 PSI

PLYWOOD
ALL PLYWOOD SHALL CONFORM TO U.S. PRODUCT STANDARD PS 1-19, AMERICAN PLYWOOD ASSOCIATION. EACH SHEET SHALL BE STAMPED WITH THE PS AND/OR APA GRADEMARK.

ALL PLYWOOD PERMANENTLY EXPOSED TO WEATHER SHALL BE EXTERIOR TYPE PLYWOOD.

ALL UNBLOCKED PLYWOOD EDGES SHALL BE TONGUE-AND-GROOVE OR SUPPORTED WITH PLYWOOD CLEATS OR PLYWOOD CLIPS.

ROOF PLYWOOD:
- 5 PLY EXPOSURE 1, CDX, SPAN RATING 32/16, SPECIES GROUP 2 OR BETTER.

WALL PLYWOOD:
- 3 PLY EXPOSURE 1, CDX, SPAN RATING 24/0, SPECIES GROUP 2 OR BETTER.

PRESERVATIVE TREATMENT FOR WOOD
PRESERVATIVE TREATMENT FOR WOOD SHALL BE WATER-BORNE, NON-ARSENIC, NON-CHROMIUM TYPE COMPLYING WITH AWPA STANDARD U1. PRESERVATIVE TREATMENT SHALL NOT CONTAIN PENTACHLOROPHENOL, ARSENIC COMPOUNDS, OR CREOSOTE. AFTER TREATMENT, RE-DRY WOOD TO BE USED IN ENCLOSED LOCATIONS TO A MOISTURE CONTENT OF 19% OR LESS. RETREAT ALL FIELD CUT ENDS AND SURFACES. FASTENERS AND BOLT ASSEMBLIES IN CONTACT WITH PRESSURE TREATED LUMBER SHALL BE HOT DIPPED GALVANIZED IN COMPLIANCE WITH ASTM A153.

FASTENERS FOR EXTERIOR WALL COVERINGS *(DSA ONLY SECTION)*
IN ACCORDANCE WITH THE REQUIREMENTS OF SECTION 2304.10.2.1, FASTENERS AND BOLT ASSEMBLIES USED AT EXTERIOR WALL COVERINGS SHALL BE HOT DIPPED ZINC COATED GALVANIZED IN ACCORDANCE WITH ASTM A153. FASTENERS AT EXTERIOR WALL COVERINGS MAY ALSO BE MECHANICALLY DEPOSITED ZINC COATED IN ACCORDANCE WITH ASTM B695.

LIGHT GAGE METAL CONNECTORS
ALL LIGHT GAGE METAL CONNECTORS SHALL BE SIMPSON STRONG TIE CONNECTORS OR APPROVED EQUAL, UNLESS NOTED OTHERWISE ON THE DRAWINGS. CONNECTORS IN CONTACT WITH PRESSURE TREATED LUMBER TO BE HOT DIPPED ZINC-COATED GALVANIZED STEEL IN COMPLIANCE WITH ASTM A653 OR ASTM A123.
ALL CONNECTORS SHALL BE INSTALLED PER MNFR SPECIFICATIONS TO MAX CAPACITY.

PREFABRICATED WOOD I-JOISTS
1. PREFABRICATED WOOD I-JOISTS SHALL BE RED-I SERIES TRUSS-JOISTS DESIGNED AND MANUFACTURED BY REDBUILT, LLC, (ICC ESR-2994) OR APPROVED EQUAL.
2. THE CONTRACTOR SHALL SUBMIT SHOP DRAWINGS FOR THE WOOD I-JOISTS TO BE INSTALLED AS SHOWN ON THE CONTRACT DRAWINGS, INCLUDING LAYOUT, SIZE OF MEMBERS AND CONNECTION DETAILS. IN ADDITION TO THE ABOVE DRAWINGS, CALCULATIONS SHOWING ALL STRESSES AND DEFLECTIONS CAUSED BY DEAD AND LIVE LOADS SHALL BE SUBMITTED TO THE ENGINEER FOR REVIEW. DRAWINGS AND CALCULATIONS SHALL BE SIGNED BY A CIVIL ENGINEER REGISTERED IN THE STATE OF CALIFORNIA.
3. PREFABRICATED WOOD I-JOISTS DESIGN AND CONSTRUCTION SHALL BE IN ACCORDANCE WITH AN ICC REPORT AND 2022 CALIFORNIA BUILDING CODE (CBC), PART 2, SECTION 2303.4.
4. JOIST MANUFACTURER SHALL OBTAIN ALL NECESSARY APPROVALS FROM THE PUBLIC AGENCIES INVOLVED IN GOVERNING CONSTRUCTION.

5. DESIGN CRITERIA:

LOADING PSF=POUNDS PER SQUARE FOOT

ROOF: DEAD LOAD SEE PROJECT DATA
LIVE LOAD SEE PROJECT DATA

DEFLECTIONS		LIVE LOAD	DEAD + LIVE LOAD	MAXIMUM
ROOF:	CANTILEVER SPAN*	L/300	L/240	1"
	INTERIOR SPAN	L/360	L/240	1"

* AT CANTILEVER, L = 2X CANTILEVER SPAN

POST INSTALLED ANCHORS

EXISTING CONCRETE SURFACES SHALL BE SCANNED PER "AS-BUILT INFORMATION" ON **S0.01** TO ENSURE EXISTING REINFORCEMENT REMAINS UNDAMAGED DURING POST INSTALLED ANCHOR INSTALLATION.

("AS-BUILT INFORMATION" Section must be shown on drawings and must include note 4 scanning of existing members prior to installation of post installed anchors.)

MECHANICAL ANCHORING SYSTEMS FOR CONCRETE
MECHANICAL ANCHORING SYSTEMS SHALL BE
- SIMPSON TITEN HD (ICC ESR-2713)
- APPROVED EQUAL

INSTALLATION OF ANCHORS INCLUDING DRILLING AND CLEANING OF HOLES SHALL BE IN ACCORDANCE WITH THE CURRENT ICC OR IAPMO REPORT

ADHESIVE ANCHORING SYSTEMS FOR CONCRETE
ADHESIVE ANCHORING SYSTEMS SHALL BE:
- HILTI HIT-RE 500 V3 (ICC ESR-3814) OR HIT-HY 200 **A or R *(choose)*** (ICC ESR 3187)
- SIMPSON SET-XP (ICC ESR-2508) OR AT-XP (IAPMO UES ER-263)
- DEWALTPOWERS PURE 110+ (ICC ESR-3298) OR AC100+ GOLD (ICC ESR-2582)
- APPROVED EQUAL.

INSTALLATION OF ANCHORS AND ADHESIVE INCLUDING DRILLING AND CLEANING OF HOLES SHALL BE IN ACCORDANCE WITH **CBC 1910A.5.4** AND THE CURRENT ICC OR IAPMO REPORT. ADHESIVES SHALL BE USED ONLY IN APPLICATIONS PERMITTED BY THE ADHESIVE'S ICC OR IAPMO REPORT. ADHESIVE ANCHORS SHALL BE INSTALLED IN CONCRETE HAVING A MINIMUM AGE OF 21 DAYS AT TIME OF ANCHOR INSTALLATION.

EXPANSION ANCHORS FOR CONCRETE
EXPANSION ANCHORS SHALL BE:
- HILTI KWIK BOLT TZ2 ANCHORS (ICC ESR-4266).
- SIMPSON STRONG BOLT 2 WEDGE ANCHOR (ICC ESR-3037)
- DEWALTPOWERS POWER-STUD+ SD2 (ICC ESR-2502)
- APPROVED EQUAL.

CONTRACTOR SHALL TORQUE ANCHORS IN ACCORDANCE WITH THE ICC OR IAPMO REPORT. EXPANSION ANCHORS SHALL USE WASHERS SIZED TO PREVENT CRUSHING OF THE ATTACHED MEMBER UNDER THE INSTALLATION TORQUE.

STRUCTURAL STEEL

STRUCTURAL STEEL AND MISCELLANEOUS IRON
STRUCTURAL STEEL AND MISCELLANEOUS IRON SHALL BE CONSTRUCTED IN ACCORDANCE WITH THE CURRENT EDITION OF THE AISC CODE OF STANDARD PRACTICE.

1. WIDE FLANGE AND STRUCTURAL TEE SHAPES SHALL CONFORM TO ASTM A992.
2. CHANNELS AND ANGLES SHALL CONFORM TO ASTM A36.
3. HOLLOW STRUCTURAL SECTIONS SHALL CONFORM TO ASTM A500, GRADE C.
4. STEEL PIPE SHALL CONFORM TO ASTM A53, GRADE B.
5. STRUCTURAL PLATE SHALL CONFORM TO ASTM A36 OR ASTM A572 GR50.
6. RAISED-PATTERN FLOOR PLATE SHALL CONFORM TO ASTM A786.

ALL STRUCTURAL STEEL AND MISCELLANEOUS IRON SHALL RECEIVE SHOP PRIME COAT EXCEPT ON SURFACES RECEIVING WELDS, EMBEDDED IN CONCRETE, OR AT SLIP CRITICAL HIGH STRENGTH BOLTS WHICH SHALL BE TOUCHED UP AFTER CONNECTION IS COMPLETE. STRUCTURAL STEEL AND MISCELLANEOUS IRON WHICH IS TO HAVE SPRAY ON FIREPROOFING SHALL NOT BE PAINTED. STRUCTURAL STEEL PERMANENTLY EXPOSED TO WEATHER SHALL RECEIVE TWO COATS OF SEMI-GLOSS ALKYD ENAMEL COMPATIBLE WITH PRIMER.

MACHINE BOLTS, ANCHOR BOLTS AND THREADED RODS
BOLTS, NUTS, WASHERS AND RODS PERMANENTLY EXPOSED TO WEATHER SHALL BE HOT DIPPED GALVANIZED.

1. BOLTS SHALL CONFORM TO ASTM A307 GRADE A OR B OR A36.
2. ANCHOR BOLTS AND RODS SHALL CONFORM TO ASTM F1554 GR 36.
3. ALL BOLTS & LAG SCREWS SHALL HAVE STANDARD STEEL WASHERS, U.N.O.
4. NUTS SHALL BE AS SHOWN BELOW AND FINISH SHALL MATCH FASTENER.
5. BOLT HOLES SHALL BE STANDARD SIZE (BOLT DIA + 1/16") TYP, U.N.O.

FASTENER GRADE AND SIZE	NUT CLASS	NUT STYLE
ASTM A36 , ASTM A307A, F1554 1/4" TO 1-1/2"	ASTM A563-A	HEX
ASTM A36 , ASTM A307A, F1554, OVER 1-1/2" TO 4"	ASTM A563-A	HEAVY HEX
ASTM A307B, 1/4" TO 4"	ASTM A563-A	HEAVY HEX

WELDING
ALL WELDING SHALL BE PERFORMED BY CERTIFIED WELDERS PER AWS "STANDARD QUALIFICATION PROCEDURE" TO PERFORM THE TYPE OF WORK REQUIRED. ALL WELDING SHALL BE IN ACCORDANCE WITH THE CURRENT AWS WELDING CODE. ARC WELDING ELECTRODES SHALL BE E70 SERIES FOR A36, A53, A500, A572 & A992 MATERIAL, AND E80 SERIES FOR A706 REINFORCING STEEL.

WELD METAL TOUGHNESS SHALL BE REPORTED ON THE ELECTRODE MANUFACTURER'S CERTIFICATE OF COMPLIANCE. ALL ELECTRODES SHALL BE LOW HYDROGEN WITH A MINIMUM CVN VALUE OF 20 FT-LBS AT -20 DEGREE F. EXCEPTIONS: METAL DECK WELDING, STAIR AND HANDRAIL WELDING, LIGHT GAGE STEEL WELDING.

TACK WELDS, AIR-ARC GOUGING AND FLAME CUTTING SHALL NOT BE PERFORMED WITHOUT ADEQUATE PREHEAT OR INCORPORATION INTO THE FINAL WELD.

THE FILLER METAL MANUFACTURER'S PUBLISHED RECOMMENDATIONS SHALL BE THE BASIS FOR DETERMINING THE ALLOWABLE RANGE OF ESSENTIAL VARIABLES FOR THE PRE QUALIFIED WPS. UNLESS NOTED OTHERWISE ON THE PLANS, BACK-UP BARS FOR CJP WELDS SHALL BE REMOVED FOLLOWED BY BACKGOUGING AND BACKWELDING.

AUTOMATIC END WELDED STUDS
AUTOMATIC END WELDED STUDS SHALL BE NELSON GRANULAR FLUX-FILLED S3L SHEAR CONNECTORS OR CFL FULLY THREADED STUDS (OR APPROVED EQUAL).

1. STUDS SHALL CONFORM TO ASTM A108, GRADES C1010 THROUGH C1020, COLD DRAWN STEEL.
2. HEADED ANCHOR STUDS SHALL BE AWS D1.1 TYPE B.
3. THREADED STUDS SHALL BE AWS D1.1 TYPE A.
4. ALL THREADED STUDS SHALL HAVE STANDARD STEEL WASHERS, U.N.O.

THE STUDS SHALL BE AUTOMATICALLY END WELDED IN ACCORDANCE WITH THE MANUFACTURER'S RECOMMENDATIONS IN SUCH A MANNER AS TO PROVIDE COMPLETE FUSION BETWEEN THE END OF THE STUD AND THE PLATE. THERE SHOULD BE NO POROSITY OR EVIDENCE OF LACK OF FUSION BETWEEN THE WELDED END OF THE STUD AND THE PLATE. THE STUD SHALL DECREASE IN LENGTH DURING WELDING APPROXIMATELY 1/8" FOR 5/8" DIAMETER AND UNDER, AND 3/16" FOR OVER 5/8" DIAMETER. WELDING SHALL BE DONE BY QUALIFIED WELDERS APPROVED BY THE WELDING INSPECTOR.

PROJECT DATA

1. PLANS AND CALCULATIONS FOR THE STRUCTURAL DESIGN WERE BASED UPON:
   - GOVERNING CODE: 2022 CALIFORNIA BUILDING CODE **W CHAPTER A AMENDMENTS**
   - SOILS REPORT: "GEOTECHNICAL INVESTIGATION AND GEOHAZARD STUDY REPORT"
   PROJECT NUMBER: 07-250014-0 BY CERTERRA RMA GEOSCIENCE, DATED APRIL 1, 2025

2. VERTICAL LOADS:
   ROOF DEAD LOAD = 16.5 PSF + SOLAR LOAD BELOW
   ROOF LIVE LOAD = 20 PSF [REDUCED PER CODE]
   CANOPY ROOF DEAD LOAD = 22 PSF
   CANOPY ROOF LIVE LOAD = 16 PSF [REDUCED PER CODE]

3. EARTHQUAKE DESIGN DATA:
   EQUIVALENT LATERAL FORCE PROCEDURE
   $V = \frac{S_{DS} I}{R} W$
   S_S = 0.654; S_1 = 0.245
   S_{DS} = 0.557; S_{D1} = 0.345
   I = 1.25; RISK CATEGORY III
   SITE CLASS = D; SEISMIC DESIGN CAT = D
   SEISMIC RESISTING SYSTEM: LIGHT-FRAME WOOD WALLS WITH WOOD STRUCTURAL PANELS (NORTH-SOUTH) & STEEL INTERMEDIATE MOMENT FRAMES (EAST-WEST)
   R = 6.5 ; Ω_0 = 3 ; C_d = 4 (NORTH-SOUTH)
   V = 0.107 W [LRFD]
   R = 4.5 ; Ω_0 = 3 ; C_d = 4 (EAST-WEST)
   V = 0.155 W [LRFD]

4. WIND DESIGN DATA:
   BASIC WIND SPEED = 100 MPH
   RISK CATEGORY III
   WIND EXPOSURE = C
   INTERNAL PRESSURE COEFFICIENT = +0.18, -0.18
   DESIGN WIND PRESSURE (q_Z) = 18.5 PSF
   WALL COMPONENTS AND CLADDING PRESSURE = +21.8, -23.7 (ZONE 4) -29.2 (ZONE 5) PSF [LRFD]
   TYPICAL ROOF COMPONENTS AND CLADDING PRESSURE = +16.0, -20.0 (ZONE 1') -34.8 (ZONE 1) -45.9 (ZONE 2) -62.5 (ZONE 3) PSF [LRFD]
   HIGH ROOF COMPONENTS AND CLADDING PRESSURE = +16.0, -29.0 (ZONE 1) -34.9 (ZONE 2) -60.3 (ZONE 3) PSF [LRFD]

   NOTE: COMPONENTS & CLADDING PRESSURES ABOVE ARE WORST CASE PRESSURES BASED ON 10 SF TRIBUTARY AREA AND MAY BE REDUCED PER ASCE 7. POSITIVE AND NEGATIVE PRESSURES SIGNIFY WIND ACTING TOWARD AND AWAY FROM SURFACES, RESPECTIVELY.

5. FOUNDATION DESIGN CRITERIA:
   BEARING PRESSURES:
   DL + LL 2000 PSF
   TOTAL LOAD 2600 PSF

6. SOLAR PANEL ALLOWANCE:
   THE DESIGN HAS ACCOUNTED FOR SOLAR PANELS TO BE LOCATED ON THE ROOF IN THE INDICATED SOLAR ZONES ON THE ROOF FRAMING PLAN.

   MAXIMUM SOLAR PANEL ALLOWANCE = 6 PSF

7. SIESMIC IRREGULARITIES: HORIZONTAL TYPE 2 REENTRANT CORNER AT GRID 2 AND E
   VERTICAL TYPE 3 IN PLAN DISCONTINUITY AT RAISED ROOF OVER RECEPTION AREA IN THE NORTH/SOUTH DIRECTION AT GRID 2/4

WIND LOADING

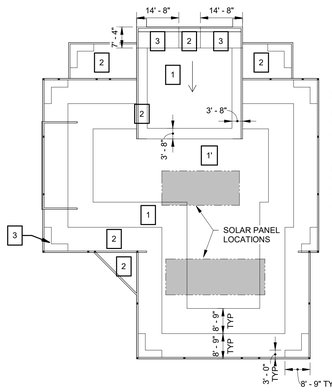

SEE ASCE 7-16 CHP 30

FOR MAIN ROOF FIGURE 30.3-2A
h = 14' - 6"
.6 x h = 8' - 9"
.2 x h = 3'-0"

FOR HIGH ROOF FIGURE 30.3-5B
h = 20' - 0"
a = 3' - 8"
2a = 7' - 4"
4a =14' - 8"

BRACING AND SHORING

1. THE STABILITY AND INTEGRITY OF THE EXISTING STRUCTURE DURING CONSTRUCTION SHALL BE MAINTAINED AT LEVELS GENERALLY ACCEPTABLE WITHIN THE CONSTRUCTION INDUSTRY BY THE USE OF BRACING AND SHORING UNTIL THE PROPOSED STRUCTURE MODIFICATIONS ARE COMPLETED. IN NO CASE SHALL THE EXISTING STRUCTURE BE ALLOWED TO BECOME UNSAFE DURING CONSTRUCTION.
2. THE BRACING AND SHORING SYSTEMS REQUIRED TO PROVIDE TEMPORARY SUPPORT OF THE EXISTING STRUCTURE DURING CONSTRUCTION SHALL BE DESIGNED TO SUPPORT THE DEAD, LIVE, SOIL, EARTHQUAKE AND WIND LOADS THAT MAY BE IMPOSED ON THE STRUCTURE DURING CONSTRUCTION IN ACCORDANCE WITH INDUSTRY STANDARDS AND GENERALLY ACCEPTED ENGINEERING PRINCIPLES.
3. THE CONTRACTOR SHALL SUBMIT PROPOSED SHORING AND BRACING SYSTEMS TO THE ENGINEER FOR REVIEW. THE SUBMITTAL WILL BE REVIEWED ONLY IN SO FAR AS THE DETAILS AFFECT THE CHARACTER OF THE FINISHED WORK, BUT THE DETAILS OF DESIGN WILL BE LEFT TO THE CONTRACTOR WHO SHALL BE RESPONSIBLE FOR THE SUCCESSFUL COMPLETION OF THE WORK.
4. NO CONSTRUCTION OF THE BRACING OR SHORING SYSTEMS, DEMOLITION FOR ITS CONSTRUCTION OR ORDERING MATERIALS SHALL TAKE PLACE UNTIL THE CONTRACTOR HAS RECEIVED REVIEWED SUBMITTALS BY THE ENGINEER.
5. THE SUBMITTALS SHALL SHOW LAYOUT, SIZE OF MEMBERS, CONNECTION DETAILS AND CONSTRUCTION SEQUENCE FOR ALL BRACING AND SHORING SYSTEMS. THE SUBMITTALS SHALL BE ACCOMPANIED BY STRUCTURAL CALCULATIONS SIGNED BY A REGISTERED CIVIL ENGINEER OF THE STATE OF CALIFORNIA. THE ENGINEER SHALL ALSO PROVIDE A LETTER STATING THAT HE/SHE HAS REVIEWED THE SUBMITTALS FOR COMPLETENESS AND SHALL PERFORM FIELD VISITS AS REQUIRED IN ORDER TO CHECK GENERAL CONFORMANCE OF THE CONSTRUCTION TO HIS CALCULATIONS.
6. THE CONTRACTOR SHALL PROVIDE STRUCTURAL CALCULATIONS SIGNED BY A REGISTERED CIVIL ENGINEER OF THE STATE OF CALIFORNIA JUSTIFYING THE USE OF ANY PROPOSED CONSTRUCTION EQUIPMENT LOADING IMPOSED ON THE EXISITNG STRUCTURE.

GENERAL NOTES

1. CONSIDER GENERAL NOTES AS APPLYING TO ALL DRAWINGS.
2. DO NOT SCALE DRAWINGS. SCALE SHOWN FOR REFERENCE ONLY.
3. THE CONTRACTOR SHALL REFER TO THE PROJECT SPECIFICATIONS IN CONJUNCTION WITH THE STRUCTURAL DRAWINGS.
4. THE CONTRACTOR IS RESPONSIBLE FOR COORDINATION OF THE STRUCTURAL WORK WITH THE ARCHITECTURAL, CIVIL, AND MEP CONTRACT DOCUMENTS, AS WELL AS ANY OTHER APPLICABLE TRADES. OMISSIONS OR CONFLICTS BETWEEN VARIOUS ELEMENTS OF THE DRAWINGS, NOTES, AND DETAILS SHALL BE BROUGHT TO THE ATTENTION OF THE ARCHITECT AND RESOLVED PRIOR TO BIDDING AND PROCEEDING WITH THE WORK.
5. THE CONTRACTOR IS SOLELY RESPONSIBLE FOR THE DESIGN, INSTALLATION, AND REMOVAL OF TEMPORARY BRACING AND CONSTRUCTION SUPPORTS REQUIRED TO COMPLETE THE PROJECT. NO PORTION OF THE STRUCTURE SHALL BE CONSIDERED TO BE SELF SUPPORTING UNTIL THE ENTIRE VERTICAL AND LATERAL LOAD RESISTING SYSTEM IS IN PLACE.
6. THE CONTRACTOR SHALL PROTECT AND SHORE ALL EXCAVATIONS WITH BRACING AND SHORING AS REQUIRED TO MAINTAIN SOIL STABILITY.
7. CONSTRUCT THOSE FEATURES OF THE PROJECT, WHICH MAY NOT BE FULLY SHOWN, IN MANNER SIMILAR TO THAT USED FOR SIMILAR FEATURES.
8. CENTERLINES OF COLUMNS AND FOUNDATIONS COINCIDE WITH GRID LINE INTERSECTIONS, U.N.O.
9. CENTERLINES OF FOUNDATION GRADE BEAMS COINCIDE WITH CENTERLINES OF WALLS, U.N.O.
10. CENTERLINES OF FRAMING MEMBERS COINCIDE WITH COLUMN CENTERLINES, U.N.O.
11. THE CONTRACTOR SHALL SUBMIT SHOP DRAWINGS SHOWING PROPOSED FOUNDATION CONSTRUCTION JOINT LOCATIONS, DETAILS, AND THE PLACEMENT SEQUENCE FOR THE STRUCTURAL ENGINEER'S APPROVAL PRIOR TO PROCEEDING WITH WORK.
12. NO CONSTRUCTION JOINTS WILL BE PERMITTED IN BEAMS, WALLS, AND SLABS UNLESS SPECIFICALLY SHOWN ON THE DRAWINGS OR APPROVED BY THE ENGINEER PRIOR TO CONSTRUCTION.
13. SPLICES SHALL BE ALLOWED ONLY AT LOCATIONS SPECIFICALLY INDICATED ON THE STRUCTURAL DRAWINGS UNLESS APPROVED OTHERWISE BY THE ENGINEER.
14. SEE ARCHITECTURAL DRAWINGS FOR SIZE AND LOCATION OF OPENINGS. VERIFY SIZE AND LOCATION OF ALL OPENINGS WITH ARCHITECTURAL DRAWINGS AND MECHANICAL DRAWINGS. NOTIFY STRUCTURAL ENGINEER IMMEDIATELY OF ANY DISCREPANCIES TYPICAL, U.N.O.

PROJECT DESCRIPTION

LEVELS:	SINGLE STORY WITH FIRST FLOOR ABOVE GRADE
FOUNDATION:	CONTINUOUS GRADE BEAMS AND ISOLATED COLUMN FOUNDATIONS & CONCRETE SLAB ON GRADE
ROOF SYSTEMS:	PLYWOOD SHEATHING OVER WOOD I-JOISTS & ENGINEERED LUMBER BEAMS
LATERAL FORCE RESISTING SYSTEM:	LIGHT FRAME WOOD WALLS SHEATHED WITH WOOD STRUCTURAL PANELS / STEEL INTERMEDIATE MOMENT FRAME
DIAPHRAGMS:	PLYWOOD SHEATHED DIAPHRAGMS
CHORDS & COLLECTORS:	WOOD BEAMS AND WALL TOP PLATES

STRUCTURAL OBSERVATION

REQUIRED OBSERVATION BY THE STRUCTURAL ENGINEER OF RECORD
1. FOUNDATION REINFORCING.
2. STEEL ERECTION.
3. ROUGH FRAMING.
4. PLYWOOD SHEATHING AND NAILING.

CONTRACTOR SHALL NOTIFY ENGINEER A MINIMUM OF 2 WORKING DAYS PRIOR TO THE TIME WHEN HIS PRESENCE IS REQUIRED. PLEASE NOTE THAT THESE OBSERVATIONS ARE INDEPENDENT OF INSPECTIONS REQUIRED BY THE BUILDING DEPARTMENT.

SUBMITTALS

SUBMITTALS FOR THE ENGINEERS REVIEW WILL BE REQUIRED AS FOLLOWS:
1. REINFORCING STEEL SHOP DRAWINGS
2. MIX DESIGNS
3. STRUCTURAL STEEL AND MISCELLANEOUS METALS SHOP DRAWINGS
4. WELDING PROCEDURE SPECIFICATIONS (AND PQR IF APPLICABLE)
5. PREFABRICATED WOOD I-JOIST SHOP DRAWINGS & CALCULATIONS

NOTES:
1. CONTRACTOR SHALL ELECTRONICALLY SUBMIT SUBMITTALS FOR REVIEW OR SHALL SUBMIT A MINIMUM OF TWO SETS OF HARD PRINTS FOR REVIEW.
2. THE GENERAL CONTRACTOR SHALL REVIEW EACH SUBMITTAL PRIOR TO FORWARDING TO ARCHITECT AND STRUCTURAL ENGINEER. THE GENERAL CONTRACTOR SHALL VERIFY THAT THE SHOP DRAWING IS COORDINATED AMONG ALL CONSTRUCTION TRADES AND THAT THE ARCHITECT'S AND STRUCTURAL ENGINEER'S COMMENTS FROM ANY PREVIOUS SUBMITTALS ARE ADDRESSED.
3. CONTRACTOR SHALL SUBMIT IN WRITING, ANY REQUEST FOR MODIFICATIONS TO THE PLANS AND SPECIFICATIONS. SHOP DRAWINGS SUBMITTED FOR REVIEW DO NOT CONSTITUTE "IN WRITING" UNLESS IT IS CLEARLY NOTED THAT SPECIFIC CHANGES ARE BEING REQUESTED.
4. REVISIONS FROM PREVIOUS SUBMITTALS SHALL BE CLEARLY MARKED BY CLOUDS.
5. FABRICATION SHALL NOT PROCEED UNTIL SUBMITTALS HAVE BEEN REVIEWED BY THE ENGINEER.

CONTRACTOR'S STATEMENT OF RESPONSIBILTY
EACH CONTRACTOR RESPONSIBLE FOR THE CONSTRUCTION OF A SEISMIC OR WIND-FORCE RESISTING SYSTEM OR COMPONENT SHALL ISSUE A WRITTEN STATEMENT OF RESPONSIBILITY IN COMPLIANCE WITH **SECTION 1704A.4** OF THE CURRENT GOVERNING EDITION OF THE CALIFORNIA BUILDING CODE. THE CONTRACTORS STATEMENT OF RESPONSIBILITY SHALL CONTAIN ACKNOWLEDG

TESTING AND SPECIAL INSPECTION

REQUIRED STRUCTURAL SPECIAL INSPECTION (DSA)

GENERAL NOTES

- THE FOLLOWING TABLE OF SPECIAL INSPECTIONS AND TESTING ARE DERIVED FROM THE STRUCTURAL PROVISIONS OF THE CBC AND REFERENCED STANDARDS AND ARE FOR REFERENCE ONLY. AT A MINIMUM, ALL SPECIAL INSPECTIONS REQUIRED BY THE CALIFORNIA BUILDING CODE (CBC) SHALL BE PROVIDED. THE FOLLOWING TABLES ARE NOT INTENDED TO BE ALL INCLUSIVE, AND ARE PROVIDED FOR THE CONVENIENCE OF THE DISTRICT, TESTING AGENCY AND CONTRACTOR IN DEVELOPING THE SCOPE OF WORK FOR REQUIRED TESTING AND INSPECTION OF STRUCTURAL MATERIALS AND COMPONENTS. FINAL DEFINITION OF THIS SCOPE OF WORK IS TO BE DETERMINED BY THE TESTING AGENCY AND THE DISTRICT.
- THE OWNER SHALL EMPLOY A SPECIAL INSPECTOR AND PROJECT INSPECTOR (IOR) DURING CONSTRUCTION ON THE FOLLOWING TYPES OF WORK AND AS NOTED IN DSA FORM 103. THE INSPECTIONS NOTED BELOW SHALL BE PERFORMED BY THE SPECIAL INSPECTOR UNLESS NOTED AS "IOR".

SPECIAL INSPECTOR

- THE SPECIAL INSPECTOR SHALL BE A QUALIFIED PERSON WHO SHALL DEMONSTRATE TO HIS COMPETENCE, TO THE SATISFACTION OF THE DIVISION OF THE STATE ARCHITECT, FOR INSPECTION OF A PARTICULAR TYPE OF CONSTRUCTION OR OPERATION REQUIRING SPECIAL INSPECTION.
- TESTING AND INSPECTIONS WILL BE PERFORMED BY AN INDEPENDENT TESTING LABORATORY SELECTED AND EMPLOYED BY THE DISTRICT AND APPROVED BY THE DIVISION OF THE STATE ARCHITECT (DSA). QUALIFICATION OF A TESTING AGENCY OR LABORATORY WILL BE UNDER THE JURISDICTION OF THE DSA STRUCTURAL SAFETY SECTION (SSS). PROCEDURAL AND ACCEPTANCE CRITERIA ARE SET FORTH IN 2022 CALIFORNIA ADMINISTRATIVE CODE (CAC) SEC 4-333(c) AND 2022 CALIFORNIA BUILDING CODE (CBC) SEC. 1704A.2.

DUTIES AND RESPONSIBILITIES OF THE SPECIAL INSPECTOR

- THE SPECIAL INSPECTOR SHALL OBSERVE THE WORK ASSIGNED FOR CONFORMANCE WITH THE APPLICABLE PROJECT DRAWINGS AND SPECIFICATIONS.
- MATERIAL REQUIRED TO BE TESTED WILL BE SELECTED BY THE TESTING LAB OR THE DISTRICT'S PROJECT INSPECTOR AND NOT BY THE CONTRACTOR.
- THE SPECIAL INSPECTOR SHALL FURNISH INSPECTION REPORTS TO THE DIVISIONOF THE STATE ARCHITECT, THE DISTRICT OR DISTRICT'S DESIGNATED REPRESENTATIVE, THE ARCHITECT OR PROJECT MANAGER, THE STRUCTURAL ENGINEER OF RECORD, THE CONTRACTOR AND OTHER PERSONS DESIGNATED BY THE DISTRICT OR DISTRICT'S REPRESENTATIVE. ALL DISCREPENCIES SHALL BE BROUGHT TO THE IMMEDIATE ATTENTIONOF THE CONTRACTOR FOR CORRECTION, THEN IF UNCORRECTED, TO THE PROPER DESIGN AUTHORITY AND TO THE BUILDING OFFICIAL. TEST REPORTS SHALL BE BROUGHT TO THE IMMEDIATE ATTENTION OF THE CONTRACTOR FOR CORRECTION, THEN IF UNCORRECTED, TO THE PROPER DESIGN AUTHORITY AND TO THE BUILDING OFFICIAL. TEST REPORTS SHALL BE SIGNED BY A REGISTERED CIVIL ENGINEER LICENSED IN THE STATE OF CALIFORNIA.
- THE SPECIAL INSPECTOR SHALL SUBMIT A FINAL SIGNED VERIFIED REPORT STATING WHETHER THE WORK REQUIRING SPECIAL INSPECTION WAS, TO THE BEST OF THE INSPECTOR'S KNOWLEDGE, IN CONFORMANCE WITH THE PROJECT PLANS AND SPECIFICATIONS AND THE APPLICABLE WORKMANSHIP PROVISIONS OF THE CBC.

PROJECT INSPECTOR [IOR]

- THE DISTRICT MUST PROVIDE FOR AND REQUIRE COMPETENT, ADEQUATE AND CONTINUOUS INSPECTION BY AN INSPECTOR SATISFACTORY TO THE ARCHITECT OR REGISTERED ENGINEER IN GENERAL RESPONSIBLE CHARGE OF OBSERVATION OF THE WORK OF CONSTRUCTION, TO ANY ARCHITECT OR REGISTERED ENGINEER DELEGATED RESPONSIBILITY FOR A PORTION OF THE WORK, AND TO DSA. THE COST OF PROJECT INSPECTION SHALL BE PAID FOR BY THE DISTRICT. AN INSPECTOR SHALL NOT HAVE ANY CURRENT EMPLOYMENT RELATIONSHIP WITH ANY ENTITY THAT IS A CONTRACTING PARTY FOR THE CONSTRUCTION. AN APPROVED PROJECT INSPECTOR MAY BE REMOVED AND REPLACED IF THE WORK PERFORMED IS NOT IN CONFORMANCE WITH ACCEPTED INSPECTION STANDARDS AS DETERMINED BY THE DISTRICT AND THE PROJECT ARCHITECT AND ENGINEER WITH CONCURRENCE OF DSA.

SYSTEM OR MATERIAL	CBC CODE REFERENCE	CODE OR STANDARD REFERENCE	FREQUENCY		REMARKS
			CONTINUOUS	PERIODIC	
FABRICATORS					
1. FABRICATORS	1704A.2.5 FABRICATOR APPROVAL NOT ALLOWED BY OSHPD		-	X	SPECIAL INSPECTIONS APPLY TO VERIFICATION OF DETAILED FABRICATION AND QUALITY CONTROL PROCEDURES INCLUDING REVIEW FOR COMPLETENESS AND ADEQUACY RELATIVE TO THE CODE REQUIREMENTS
CONCRETE					
1. REINFORCING STEEL PLACEMENT INCLUDING PRESTRESSING TENDONS	1705A3.9, 1908A.1, 1910A.2, 1910A.3 [DSA-SS/CC] 1909.2.4,1909.2.5, 1909.4.1	ACI 318: Ch. 20, 25.2,25.3,26.6.1-26.6.3, 26.13.1, 26.13.2, 26.13.3			SPECIAL INSPECTIONS APPLY TO BAR GRADE, SIZE, CONDITION, QUANTITY, SPACING, POSITION, SPLICES AND COVER
b) ALL OTHER REINFORCEMENT			-	X	
3. INSPECT ANCHORS CAST IN CONCRETE	-	ACI 318: 17.8.2, 17.8.2.4, 26.7.2, 26.13.1, 26.13.2, 26.13.1.3	-	X	ALL BOLTS VISUALLY INSPECTED, SPECIAL INSPECTIONS APPLY TO BOLT GRADE, SIZE, CONDITION, LOCATION AND EMBEDMENT.
4. INSPECT ANCHORS POST INSTALLED IN HARDENED CONCRETE MEMBERS:					SPECIAL INSPECTOR SHALL VERIFY AND RECORD: ANCHOR TYPE, SIZE AND DIMENSIONS. HOLE DIMENSIONS AND CLEANLINESS. ANCHOR SPACING. EDGE DISTANCE. ANCHOR EMBEDMENT. TORQUE VALUE AS APPLICABLE). ADHESIVE TYPE AND EXPIRATION (AS APPLICABLE). ADHESIVE ANCHOR INSTALLER CERTIFICATIONS (AS APPLICABLE).
a) ADHESIVE ANCHORS INSTALLED IN HORIZONTALLY OR UPWARDLY INCLINED ORIENTATIONS TO RESIST SUSTAINED TENSION LOADS.	1705A.3.8, 1910A.5, [DSA-SS/CC] 1909.2.7	ACI 318: 17.8.2.4, 26.7.2, 26.13.1, 26.13.2	X	-	
b) MECHNICAL ANCHORS AND ADHESIVE ANCHORS NOT DEFINED IN 4a.	1705A.3.8, 1910A.5, [DSA-SS/CC] 1909.2.7	ACI 318: 17.8.2, 26.7.2, 26.13.1, 26.13.3	-	X	
5. VERIFY USE OF REQUIRED MIX DESIGN.	1904.1, 1904.2 1903A.5, 1903A.6, 1903A.7, 1904A.1, 1904A.2, 1910A.1, [OSHPD 1&4] 1908A.1, [DSA-SS/CC] 1909.2.1, 1909.2.2, 1909.2.3	ACI 318: Ch. 19, 26.4.3, 26.4.4 ACI318: Ch. 19, 26.4, 26.13.3.2	X	-	EACH TRUCK DELIVERY TICKET
6. PRIOR TO AND DURING CONCRETE PLACEMENT FABRICATE SPECIMENS FOR STRENGTH TESTS, PERFORM SLUMP AND AIR CONTENT TESTS, AND DETERINE THE TEMPERATURE OF THE CONCRETE.	1705A.3, 1705A.3.6, 1705A.3.9, 1905A.1.17, [DSA-SS/CC] 1909.3.9	ASTM C31, ASTM C172 ACI 318: 26.4, 26.5, 26.12	X	-	
7. INSPECT CONCRETE (AND SHOTCRETE) PLACEMENT FOR PROPER APPLICATION TECHNIQUES	1705A.3.9, 1905A.1.15, 1905A.1.16, [DSA-SS/CC] 1909.3.7, 1909.3.8	ACI 318: 26.5, 26.13 ACI 506: 3.4	X	-	
8. VERIFY MAINTENANCE OF SPECIFIED CURING TEMPERATURE AND TECHNIQUES	-	ACI 318: 26.5.3-26.5.5, 26.13.3.3	X	-	SPECIAL INSPECTIONS APPLY TO VERIFYING SPECIFIED CURING IS PERFORMED, INCLUDING HOT AND COLD WEATHER PROVISIONS.
NON-SHRINK GROUT					
1. PLACEMENT OF NON-SHRINK GROUT			X	-	SPECIAL INSPECTIONS APPLY TO THICKNESS OF GROUT PAD. TAKE TEST SPECIMENS OF NON-SHRINK GROUT
STRUCTURAL STEEL					THE SPECIAL INSPECTIONS AND NONDESTRUCTIVE TESTING OF STRUCTURAL STEEL ELEMENTS IN BUILDINGS, STRUCTURES AND PORTIONS THEREOF SHALL BE IN ACCORDANCE WITH THE QUALITY ASSURANCE INSPECTION REQUIREMENTS OF: AISC 360, AISC 341, AISC 358, AND CBC CHAPTER 22A
1. FABRICATION OF STRUCTURAL ELEMENTS	1704A.2.5		-	X	REFER TO INSPECTION OF FABRICATOR REQUIREMENTS
2. MATERIAL VERIFICATION OF STRUCTURAL STEEL	1705A.2	AISC 360 A3.1	-	X	CERTIFIED MILL TEST REPORTS
5. MATERIAL IDENTIFICATION AND TESTING OF STRUCTURAL STEEL AND COLD-FORMED STEEL DECK					
a) FOR STRUCTURAL STEEL, IDENTIFICATION MARKINGS TO CONFORM TO AISC 360	2202A.1, [DSA-SS/CC] 2202.1	AISC A360 A3.1	-	X	
b) FOR OTHER STEEL, IDENTIFICATION MARKINGS TO CONFORM TO ASTM STANDARDS SPECIFIED IN THE APPROVED CONSTRUCTION DOCUMENTS	2202A.1, [DSA-SS/CC] 2202.1	APPLICABLE ASTM MATERIAL STD'S	-	X	
c) MANUFACTURER'S CERTIFIED TEST REPORTS	-	AISC 360 A3.1 & A3.2	-	X	
d) TESTING OF UNIDENTIFIED STEEL	2202A.1, [DSA-SS/CC] 2202.1	APPLICABLE ASTM MATERIAL STD'S	-	-	
WELDING					
1. PRIOR TO WELDING		AISC 360: T. N5.4-1			COMPLAINCE WITH WELDING PROCEDURE SPECIFICATIONS AND PQR (IF APPLICABLE)
a) WELDER QUALIFICATION RECORDS AND CONTINUITY RECORDS			-	X	WPS SHALL BE AVAILABLE
b) MANUFACTURER CERTS FOR WELDING CONSUMABLES AVAILABLE			-	X	MATERIAL IDENTIFICATION (TYPE/GRADE)
c) WELDER IDENTIFICATION SYSTEM			X	-	THE CONTRACTOR SHALL HAVE, OR PUT ENABLE, STABLE MAINTAIN A SYSTEM BY WHICH A WELDER WHO HAS WELDED A JOINT OR MEMBER CAN BE IDENTIFIED. STAMPS, IF USED, SHALL BE THE LOW-STRESS TYPE
d) FIT-UP OF GROOVE WELDS (INCLUDING JOINT GEOMETRY)			-	X	JOINT PREPARATIONS, DIMENSIONS, CLEANLINESS, TACKING AND BACKING TYPE (AS APPLICABLE), CONFIGURATION AND FINISH OF ACCESS HOLES
e) FIT UP OG CJP GROOVE WELDS OF HSS T-, Y- AND K-JOINTS WITHOUT BACKING (INCLUDING JOINT GEOMETRY)			-	X	
f) FIT-UP OF FILLET WELDS			-	X	
g) CHECK WELDING EQUIPMENT			-	X	
2. DURING WELDING		AISC 360: T. N5.4-2			
a) INSPECT ALL STRUCTURAL WELDING	1705A.2.5		X	-	NOTE: THERE SHOULD BE NO WELDING OVER TACK WELDS. ENVIRONMENTAL CONDITIONS SHOULD MEET STANDARDS. WPS AND ESTABLISHED WELDING TECHNIQUES SHALL BE FOLLOWED PER AISC AND AWS STANDARDS.
3. AFTER WELDING		AISC 360: T. N5.4-3			
a) WELDS CLEANED			X	-	
b) SIZE, LENGTH AND LOCATION OF WELDS			-	X	WELDS SHALL MEET VISUAL ACCEPTANCE CRITERIA. NO ARC STRIKES WILL BE PRESENT, BRACKING AND WELD TABS ARE REMOVED (IF REQUIRED)
c) K-AREA			-	X	WHEN WELDING OF DOUBLER PLATES, CONTINUITY PLATES OR STIFFENERS HAS BEEN PERFORMED IN THE K-AREA, VISUALLY INSPECT THE WEB K-AREA FOR CRACKS WITHIN 3 IN. (75 MM) OF THE WELD.
d) WELD ACCESS HOLES IN ROLLED HEAVY SHAPES AND BUILT-UP HEAVY SHAPES			-	X	AFTER ROLLED HEAVY SHAPES (SEE SECTION A3.1c) AND BUILT-UP HEAVY SHAPES (SEE SECTION A3.1d) ARE WELDED, VISUALLY INSPECT THE WELD ACCESS HOLE FOR CRACKS.
h) REPAIR ACTIVITIES			-	X	DOCUMENTATION SHALL BE PROVIDED OF ACCEPTANCE OR REJECTION OF WELDED JOINTS OR MEMBERS
i) NO PROHIBITED WELDS HAVE BEEN ADDED WITHOUT THE APPROVAL OF THE EOR			-	X	

REQUIRED STRUCTURAL TESTING (DSA)

SYSTEM OR MATERIAL	CBC CODE REFERENCE	CODE OR STANDARD REFERENCE	FREQUENCY/REMARKS
CONCRETE			
1. SAMPLING	1705A.3	ASTM C172	
2. SLUMP		ASTM C143	ONE TEST AT POINT OF TRUCK DISCHARGE FOR 50 CY OR FRACTION THEREOF FOR EACH TYPE OF CONCRETE. ADDITIONAL TESTS REQUIRED WHEN CONSISTENCY SEEMS TO HAVE CHANGED
3. AIR CONTENT		ASTM C173	VOLUMETRIC METHOD, ONE FOR EACH 50 CY PLACED FOR EACH TYPE OF AIR-ENTRAINED CONCRETE
4. TEMPERATURE		ASTM 1064	TEST HOURLY WHEN AIR TEMPERATURE IS 50°F AND BELOW AND WHEN 85°F AND ABOVE, AND EACH TIME A SET OF COMPRESSION TEST SPECIMENS ARE MADE
5. TAKE LABORATORY CURED COMPRESSION TEST SPECIMENS		ASTM C31	TAKE (1) SET OF 3 STANDARD CYLINDERS FOR EACH 50 CY OF CONCRETE OR 5000 SQ. FT. (2000 SQ. FT. DSA) OF SLABS & WALL OR FRACTION THEREOF FOR EACH TYPE OF CONCRETE TAKEN EACH DAY. MOLD AND STORE CYLINDERS FOR LABORATORY CURED TEST SPECIMENS EXCEPT WHEN FIELD CURED TEST SPECIMENS ARE REQUIRED
7. TEST COMPRESSIVE STRENGTH		ASTM C39	TEST (1) SPECIMEN AT 7 DAYS AND (2) SPECIMENS AT 28 DAYS
8. TEST DRYING SHRINKAGE		ASTM C157	TAKE (1) SET OF 3 DRYING SHINKAGE SAMPLES FOR EACH DAYS POUR OF SLABS ON GRADE, SUSPENDED SLABS, AND POST TENSIONED SLABS.
NON-SHRINK GROUT			
1. TAKE TEST SPECIMENS			
POST INSTALLED ANCHORS			
1. TEST ANCHORS FOR STRUCTURAL APPLICATION	1910A.5	ANCHOR ICC REPORT	TEST ANCHORS PER CBC 1910A.5 AND ANCHORS ICC REPORT WITH THE FOLLOWING FREQUENCY: 100% FOR STRUCTURAL APPLICATIONS
EXCEPTIONS:			
SILL PLATE BOLTING			10%
SLAB-ON-GRADE COLD JOINT DOWELS			AS APPROVED BY THE ENGINEER
2. TEST ANCHORS FOR NON STRUCTURAL APPLICATIONS SUCH AS EQUIPMENT ANCHORAGE (ANCHORS NOT SHOWN ON STRUCTURAL DRAWINGS)			50%
3. TESTING OF ANCHORS SHALL BE DONE IN THE PRESENCE OF THE PROJECT INSPECTOR AND A REPORT OF THE TEST RESILTS SHALL BE SUBMITTED TO DSA. IF ANY ANCHORS FAIL THE TESTING REQUIREMENTS, THE ADDITIONAL TESTING REQUIREMENTS SHALL BE ACCEPTABLE TO THE ENFORCEMENT AGENCY			
4. TESTING VALUES AS NOTED IN THE POST-INSTALLED ANCHOR TESTING LOADS ON SHEET			
AUTOMATIC END-WELDED STUDS			
1. TEST STUDS PER THE LISTED STANDARDS AND THE STUDS ICC REPORT. PERFORM THE TORQUE TEST FOR TYPE A STUDS AND BEND TESTS FOR TYPE B STUDS	1705A.2.1	AWS D1.1, AISC 360	TEST AT THE BEGINNING OF EACH DAYS WORK, A MINIMUM OF (2) TEST STUD WELDS SHALL BE MADE WITH THE EQUIPMENT TO BE USED TO METAL WHICH IS THE SAME AS ACTUAL WORK PIECE AND AT ANY CHANGE IN THE WELDING SET UP OR PERSONNEL, RETEST (2) STUDS PRIOR TO PRODUCTION WORK

REQUIRED GEOTECHNICAL SPECIAL INSPECTION (DSA)

SYSTEM OR MATERIAL	CBC CODE REFERENCE	CODE OR STANDARD REFERENCE	FREQUENCY		REMARKS
			CONTINUOUS	PERIODIC	
SOILS					
1. INSPECT MATERIALS BELOW FOOTING FOR BEARING CAPACITY.	1705A.6	GEOTECHNICAL REPORT	-	X	BY THE GEOTECHNICAL ENGINEER
2. INSPECT EXCAVATIONS FOR PROPER DEPTH.			-	X	
3. PERFORM CLASSIFICATION AND TESTING OF CONTROLLED FILL MATERIALS.			-	X	
4. VERIFY USE OF PROPER MATERIALS, DENSITIES, AND LIFT THICKNESS DURING PLACEMENT AND COMPACTION OF CONTROLLED FILL.			X	-	
5. PRIOR TO PLACEMENT OF CONTROLLED FILL, OBSERVE SUBGRADE AND VERIFY SITE HAS BEEN PREPARED PROPERLY.			-	X	
FOUNDATIONS					
1. PRIOR TO THE CONTRACTOR REQUESTING A IOR FOUNDATION INSPECTION, THE SOILS ENGINEERING SHALL ADVISE THE IOR IN WRITING.					SOILS ENGINEERING SHALL PROVIDE THE FOLLOWING IN WRITING: • THAT THE BUILDING PAD WAS PREPARED IN ACCORDANCE WITH THE SOILS REPORT • THAT THE UTILITY TRENCHES HAVE BEEN PROPERLY BACKFILLED AND COMPACTED. • THAT THE FOUNDATIONS COMPLY WITH THE SOILS REPORT AND APPROVED PLANS.

REQUIRED GEOTECHNICAL TESTING (DSA)

SYSTEM OR MATERIAL	CBC CODE REFERENCE	CODE OR STANDARD REFERENCE	FREQUENCY	REMARKS
SOILS				
1. PROCTOR TESTS OF THE STRUCTURAL FILL MATERIAL	1705A.6	ASTM 698	EACH MATERIAL TO BE COMPACTED	BY GEOTECHNICAL ENGINEER
2. STRUCTURAL FILL IN-PLACE DENSITY		ASTM D1556	EACH 500 SF OF EACH LIFT PLACED EACH DAY	

ABBREVIATIONS

@	AT	DBL	DOUBLE	Ga	GAUGE	(N)	NEW	RAD or R	RADIUS	U.N.O.	UNLESS NOTED OTHERWISE
ø	DIAMETER	DCW	DEMAND CRITICAL WELD	GALV	GALVANIZED	NIC	NOT IN CONTRACT	RCP	REINFORCED CONCRETE PIPE	VC	VERTICAL CURVE
#	NUMBER	DET	DETAIL	GLB	GLUE LAMINATED BEAM	No.	NUMBER	REINF	REINFORCED, REINFORCING	VERT	VERTICAL
AB	ANCHOR BOLT	DF	DOUGLAS FIR	H or HT	HEIGHT	Ø	NOMINAL DIAMETER	REQ'D	REQUIRED	W/	WITH
ACI	AMERICAN CONCRETE INSTITUTE	DIAG	DIAGONAL	HDR	HEADER	NOM	NOMINAL	REV	REVISION	WF	WIDE FLANGE
AESS	ARCHITECTURALLY EXPOSED STRUCTURAL STEEL	Ø	DIAMETER	HEX	HEXAGONAL	NS	NEAR SIDE	RS	ROUGH SAWN	WP	WATERPROOF or WORKPOINT
ALT	ALTERNATE	DIST	DISTANCE	HGR	HANGER	NTS	NOT TO SCALE	SAD	SEE ARCHITECTURAL DRAWINGS	WT	WEIGHT
APPROX	APPROXIMATE(LY)	DL	DEAD LOAD	HORIZ	HORIZONTAL	O.C.	ON CENTER	SCHED	SCHEDULE	WWF	WELDED WIRE FABRIC
ARCH	ARCHITECT(URAL)	DN	DOWN	HS	HIGH STRENGTH	OD	OUTSIDE DIAMETER	SEC	SECTION		
BLDG	BUILDING	DO	DITTO	HSB	HIGH STRENGTH BOLT	OG	ORIGINAL GROUND	SHT	SHEET		
BLK	BLOCK	DWG	DRAWING	HSS	HOLLOW STRUCTURAL SECTION	OH	OPPOSITE HAND	SHTG	SHEATHING		
BLKG	BLOCKING	(E)	EXISTING	ID	INSIDE DIAMETER	OPP	OPPOSITE	SIM	SIMILAR		
BM	BEAM	EA	EACH	INSP	INSPECTION/INSPECTOR	OWSJ	OPEN WEB STEEL JOIST	SLRS	SEISMIC LOAD RESISTING SYSTEM		
BN	BOUNDARY NAILING	EC	END HORIZONTAL CURVE	INSUL	INSULATION	PL	STEEL PLATE	SM	SHEET STEEL		
BOF	BOTTOM OF FOOTING	ECR	END CURB RETURN	JT	JOINT	PC	POINT OF CURVATURE	SMS	SHEET STEEL SCREW		
BOT	BOTTOM	EL	ELEVATION	KIPS	ONE THOUSAND POUNDS	PCC	POINT OF COMPOUND CURVE OR PORTLAND CEMENT CONCRETE	SPEC(S)	SPECIFICATION(S)		
BVC	BEGIN VERTICAL CURVE	ELEV	ELEVATOR	LBS	POUNDS			SQ	SQUARE		
C-C	CENTER TO CENTER	EMB	EMBANKMENT	LF	LINEAR FOOT	PCP	PERFORATED CONCRETE PIPE	SQFT	SQUARE FOOT		
CL	CENTERLINE	EN	EDGE NAILING	LGS	LIGHT GAUGE STEEL	PCVC	POINT OF COMPOUND VERTICAL CURVE	SQYD	SQUARE YARD		
CF	CUBIC FOOT	EQ	EQUAL	LL	LIVE LOAD	PDF	POWDER DRIVEN FASTENER	STAG	STAGGERED		
CIDH	CAST IN DRILLED HOLE	EVC	END VERTICAL CURVE	LLBB	LONG LEGS BACK TO BACK	PG	PROFILE GRADE	STD	STANDARD		
CIP	CAST IRON PIPE	EW	EACH WAY	LLH	LONG LEG HORIZONTAL	PI	POINT OF INTERSECTION	STL	STEEL		
CJ	CONSTRUCTION JOINT	EXIST	EXISTING	LLV	LONG LEG VERTICAL	PJP	PARTIAL JOINT PENETRATION	STRUCT	STRUCTURAL		
CJP	COMPLETE JOINT PENETRATION	EXP	EXPRESSWAY	LOC	LOCATION	P/L	PROPERTY LINE	STS	SELF TAPPING SCREW		
CLG	CEILING	FBC	FRAMED BEAM CONNECTION	LOL	LAYOUT LINE	PL	PLATE	SYM	SYMMETRICAL		
CLR	CLEAR. CLEARANCE	FG	FINISHED GRADE	LONGIT	LONGITUDINAL	PLY	PLYWOOD	T&G	TONGUE AND GROOVE		
CMP	CORRUGATED STEEL PIPE	FIN	FINISH(ED)	LS	LAG SCREW(S)	POC	POINT ON HORIZONTAL CURVE	TBR	TO BE REMOVED		
CMU	CONCRETE MASONRY UNIT	FL	FLOW LINE	LT	LEFT	POT	POINT ON TANGENT	TEMP	TEMPORARY		
COL	COLUMN	FND	FOUNDATION	LW	LIGHT WEIGHT	POVC	POINT ON VERTICAL CURVE	TO	TOP OF		
CONC	CONCRETE	FN	FIELD NAILING	MAX	MAXIMUM	PRC	POINT OF REVERSE CURVE	TOF	TOP OF FOOTING		
CONN	CONNECTION	FOC	FACE OF CONCRETE	MB	MACHINE BOLT(S)	PRVC	POINT OF REVERSE VERTICAL CURVE	TOP	TOP OF PLATE		
CONST	CONSTRUCTION	FOHC	FREE OF HEART CENTER	MECH	MECHANICAL	PSF	POUNDS PER SQUARE FOOT	TOS	TOP OF SLAB OR STEEL		
CONT	CONTINUOUS	FOM	FACE OF MASONRY	MFR	MANUFACTURER	PSI	POUNDS PER SQUARE INCH	TOW	TOP OF WALL		
COORD	COORDINATE	FOS	FACE OF STUD(S)	MIN	MINIMUM, MINUTES	PT	POINT OR POST TENSION	TRANS	TRANSVERSE		
CSK	COUNTERSINK	FP	FULL PENETRATION	MISC	MISCELLANEOUS	PTDF	PRESSURE TREATED DOUGLAS FIR	TYP	TYPICAL		
CY	CUBIC YARD	FS	FAR SIDE	MOD	MODIFIED OR MODIFY	PVC	POLYVINYL CHLORIDE				
		FTG	FOOTING								

POST-INSTALLED ANCHOR TESTING

TORQUE INSTALLATION REQUIREMENTS - CONCRETE ANCHORS

ANCHOR DIAMETER	HILTI KB-TZ2 (ICC ESR 4266)		SIMPSON STRONG-BOLT 2 (ICC ESR 3037)		SIMPSON TITEN HD (ICC ESR 2713)	
	MINIMUM NOMINAL EMBED	INSTALL TORQUE (FT-LBS)	MINIMUM NOMINAL EMBED	INSTALL TORQUE (FT-LBS)	MINIMUM NOMINAL EMBED	MAX INSTALL TORQUE (FT-LBS)
1/4"	1 3/4"	4	1 3/4"	4	2 1/2"	24
3/8"	3"	30	2 7/8"	30	3 1/4"	50
1/2"	3 3/4"	50	3 7/8"	60	4"	65
5/8"	4 1/2"	40	5 1/8"	90	5 1/2"	100
3/4"	5 1/2"	110	5 3/4"	150	6 1/4"	150
1"	6 3/8"	185	9 3/4"	230	-	-

NOTES:

1. MINIMUM EMBEDMENTS VARY BETWEEN MANUFACTURERS. EMBEDMENTS NOTED ARE MINIMUMS AND SHOULD BE INCREASED AS REQUIRED TO MEET MANUFACTURER'S PUBLISHED MINIMUM EMBEDMENTS.
2. ANCHORS SHOULD BE INSTALLED INTO MEMBERS WITH A MINIMUM THICKNESS AS NOTED IN THE MANUFACTURER'S ICC REPORT.
3. WHERE DRILLED HOLE DEPTH IS WITHIN 2 1/2" OF THE EDGE OF MEMBER, CONTRACTOR SHALL USE ROTARY DRILL.
4. TENSION TESTED ANCHORS SHALL MAINTAIN THE TEST LOAD FOR A MINIMUM OF 15 SECONDS, AND SHALL EXHIBIT NO DISCERNIBLE MOTION DURING THE TEST (SUCH AS LOOSENING OF THE WASHER BELOW THE NUT)
5. THE TESTING APPARATUS FOR THE TENSION TESTED ANCHORS SHALL NOT BE WITHIN 1.5 TIMES THE ANCHORS EMBEDMENT DEPTH.
6. TORQUE TESTED ANCHORS SHALL ATTAIN THE SPECIFIED TORQUE WITH ONE-HALF (1/2) TURN OF THE NUT. SCREW TYPE ANCHORS TESTED WITH A CALIBRATED TORQUE WRENCH SHALL ATTAIN THE SPECIFIED TORQUE WITHIN ONE-QUARTER (1/4) TURN OF THE SCREW AFTER INITIAL SEATING OF THE SCREW HEAD.

TORQUE INSTALLATION REQUIREMENTS - CONCRETE BLOCK ANCHORS

ANCHOR DIAMETER	HILTI KB-TZ2 (ICC ESR 4561)		SIMPSON STRONG-BOLT 2 (UES ER 240)		SIMPSON TITEN HD (ICC ESR 1056)	
	MINIMUM NOMINAL EMBED	INSTALL TORQUE (FT-LBS)	MINIMUM NOMINAL EMBED	INSTALL TORQUE (FT-LBS)	MINIMUM NOMINAL EMBED	INSTALL TORQUE (FT-LBS)
1/4"	1 3/4"	4	1 3/4"	4	2 1/2"	-
3/8"	2 1/2"	15	2 7/8"	20	2 3/4"	-
1/2"	3 1/4"	25	3 1/2"	35	3 1/2"	-
5/8"	4 1/2"	30	4 3/8"	55	4 1/2"	-
3/4"	5 1/2"	50	5 1/4"	100	5 1/2"	-

ALLOWABLE LOAD AND TESTING REQUIREMENTS FOR EPOXY SET DOWELS IN CONCRETE

ANCHOR DIAMETER	MINIMUM EMBED	ALLOWABLE TENSION (LBS)	TENSION TEST (LBS)	SHEAR TEST
3/8"	2 3/4"	1200	2400	NONE
1/2"	4 1/2"	1900	3800	NONE
5/8"	5"	2500	5000	NONE
3/4"	6 3/4"	3600	7200	NONE
7/8"	7 3/4"	7000	14000	NONE

DSA STAMP
IDENTIFICATION STAMP
DIV. OF THE STATE ARCHITECT
APP: 02-123307 INC:
REVIEWED FOR
SS ☑ FLS ☑ ACS ☑
DATE: 10/15/2025

CORNERSTONE structural engineering group
986 W. Alluvial Avenue, Suite 201
Fresno, California 93711
559.320.3200
fax 559.320.3201

Owner:
WASHINGTON UNIFIED SCHOOL DISTRICT

WASHINGTON UNIFIED SCHOOL DISTRICT
6041 SOUTH ELM AVE
FRESNO, CA 93706

Project Name:
STUDENT SERVICES

Project Address:
WASHINGTON UNION HIGH SCHOOL
6041 SOUTH ELM AVE,
FRESNO, CA 93706

integrated designs
by SOMAM, Inc.

ARCHITECTURE
ENGINEERING
INTERIOR DESIGN

6011 N. FRESNO STREET, SUITE 130
FRESNO CALIFORNIA 93710
P:(559) 436-0881 F:(559) 436-0887
E: design@somam.com
integrateddesigns.com

Ownership of Documents
This document, the ideas and designs incorporated herein, as an instrument of Professional Service is the property of Integrated Designs by SOMAM Inc. and is not to be used, in whole or in part for any other project without written authorization.
© COPYRIGHT 2022

Stamp:
REGISTERED PROFESSIONAL ENGINEER
JUSTIN G. GEE
No. M 36023
EXP. 3/31/27
STRUCTURAL
STATE OF CALIFORNIA

Sheet Title:
TESTNG & SPECIAL INSPECTION

Job No.:
5613

Sheet No.:
S0.02

Release: Date:

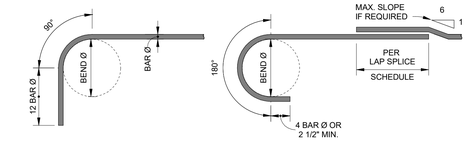

BAR SIZE	MIN. BEND Ø
#3 THRU #8	6 BAR Ø
#9 THRU #11	8 BAR Ø

MAIN REINFORCEMENT

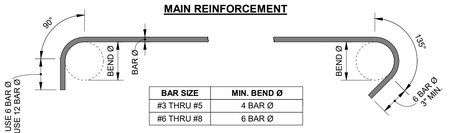

BAR SIZE	MIN. BEND Ø
#3 THRU #5	4 BAR Ø
#6 THRU #8	6 BAR Ø

STIRRUPS & TIES

#3, #4, #5 USE 6 BAR Ø
#6, #7, #8 USE 12 BAR Ø

REINFORCING BAR HOOKS

1 1/2" = 1'-0"

1 S1.01

MINIMUM LAP SPLICE SCHEDULE								
BAR SIZE	POSITION	LAP SPLICE LENGTH IN INCHES						
		F'c ≤ 3500 PSI		F'c = 4000 PSI		F'c = 5000 PSI		
		CLASS A	CLASS B	CLASS A	CLASS B	CLASS A	CLASS B	
#3	TOP	24	28	24	25	24	24	
	BOTTOM	24	24	24	24	24	24	
#4	TOP	29	38	25	33	24	29	
	BOTTOM	24	29	24	25	24	24	
#5	TOP	36	47	31	41	28	36	
	BOTTOM	28	36	24	31	24	28	
#6	TOP	43	56	37	49	34	44	
	BOTTOM	33	43	29	37	26	34	
#7	TOP	63	81	54	71	49	63	
	BOTTOM	48	63	42	54	38	49	
#8	TOP	72	93	62	81	56	72	
	BOTTOM	55	72	48	62	43	56	
#9	TOP	81	105	70	91	63	81	
	BOTTOM	62	81	54	70	48	63	
#10	TOP	91	118	79	102	71	92	
	BOTTOM	70	91	61	79	54	71	
#11	TOP	101	131	87	114	78	102	
	BOTTOM	78	101	67	87	60	78	

NOTES:
1. LAP SPLICE LOCATIONS SHALL BE APPROVED BY THE ENGINEER.
2. LAP SPLICES SHALL BE CONTACT (CLASS B) FOR CAST-IN-PLACE CONCRETE UNLESS NOTED OTHERWISE.
3. TOP BARS ARE HORIZONTAL BARS WITH 12 INCHES OR MORE OF FRESH CONCRETE BELOW THE BAR.
4. WHEN TWO BARS OF DIFFERENT SIZE ARE SPLICED, USE THE LARGER LAP LENGTH.
5. STAGGER LAP SPLICES WHERE POSSIBLE. WHERE CLASS A SPLICES ARE CALLED OUT ON THE DRAWINGS, STAGGER LAP SPLICES 24 INCHES FOR ADJACENT BARS.
6. LAP SPLICES NOTED ARE FOR NORMAL WEIGHT CONCRETE. LAP SPLICE LENGTHS SHALL BE MULTIPLIED BY 1.3 FOR LIGHTWEIGHT CONCRETE.
7. NO SPLICES ARE ALLOWED FOR #14 AND #18 REINFORCEMENT.
8. BAR DEVELOPMENT LENGTHS EQUAL CLASS A LAP SPLICE LENGTHS.
9. ENTIRE BUNDLED BARS SHALL NOT BE LAP SPLICED. LAP SPLICES OF INDIVIDUAL BARS WITHIN THE BUNDLE SHALL NOT OVERLAP.
10. AT CONTRACTOR'S OPTION, MECHANICAL COUPLERS MAY BE SUBSTITUTED FOR LAP SPLICES. MECHANICAL COUPLERS SHALL HAVE AN ICC REPORT AND SHALL DEVELOP 125% OF THE YIELD STRENGTH OF THE BAR.

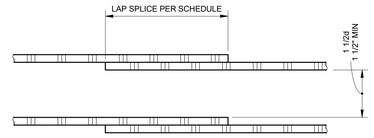

CONTACT SPLICE



NON - CONTACT SPLICE

LAP SPLICE SCHEDULE FOR CONCRETE

1" = 1'-0"

2 S1.01

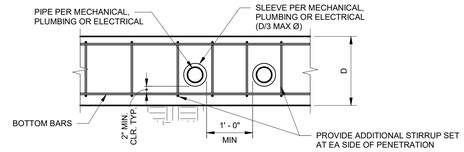

CLEAR OF TOP & BOTTOM REINFORCING

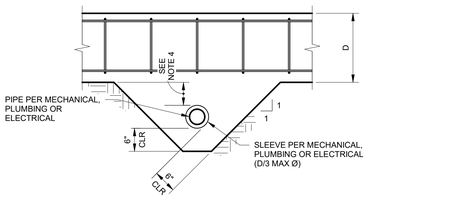

BELOW BOTTOM REINFORCING

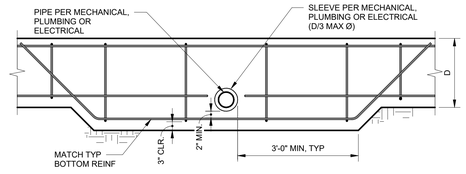

AT BOTTOM REINFORCING

NOTES:
1. SLEEVE ID 2" LARGER THAN PIPE OD OR BELL OD.
2. SEAL VOID BETWEEN PIPE AND SLEEVE WITH ELASTIC WATERPROOF MATERIAL, TYP.
3. DETAIL APPLICABLE TO MAXIMUM 8"Ø SLEEVE.
4. NO FTG EXTENSION REQ'D FOR PIPE DEEPER THAN 12" BELOW FTG (SLEEVE STILL REQ'D).
5. WHERE PENETRATION CONFLICTS WITH REBAR TIE, OMIT TIE & PROVIDE 1 ADDITIONAL TIE EACH SIDE OF SLEEVE.

FOOTING PENETRATIONS

3/4" = 1'-0"

3 S1.01

MINIMUM CONCRETE COVER SCHEDULE	
ELEMENT	CLEAR COVER
CONCRETE CAST AGAINST AND PERMANENTLY EXPOSED TO EARTH	3"
CONCRETE EXPOSED TO EARTH OR WEATHER: #5 AND SMALLER #6 AND LARGER	1 1/2" 2"
CONCRETE NOT EXPOSED TO WEATHER OR IN CONTACT WITH GROUND: SLABS, WALLS & JOISTS: #11 AND SMALLER #14 AND #18 BEAMS & COLUMNS PRIMARY REINFORCEMENT, TIES, STIRRUPS, & SPIRALS SHELLS & FOLDED PLATE MEMBERS #5 AND SMALLER #6 AND LARGER	 3/4" 1 1/2" 1 1/2" 1/2" 3/4"

NOTES:
1. COVERS NOTED SHALL BE USED UNLESS NOTED OTHERWISE ON THE CONTRACT DOCUMENTS.
2. COVERS NOTED ARE FOR CAST-IN-PLACE, NON-PRESTRESSED MEMBERS.
3. MINIMUM CLEAR COVER FOR BUNDLED BARS SHALL BE THE LESSER OF THE EQUIVALENT DIAMETER OF THE BUNDLE AND 2".

MINIMUM CONCRETE COVER SCHEDULE

1" = 1'-0"

4 S1.01

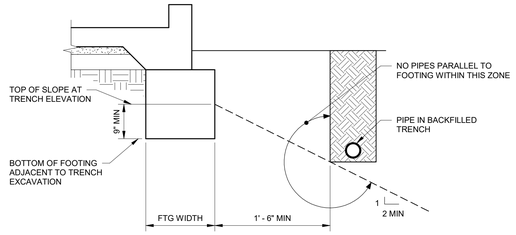

EXCAVATION PARALLEL TO FTG

3/4" = 1'-0"

5 S1.01

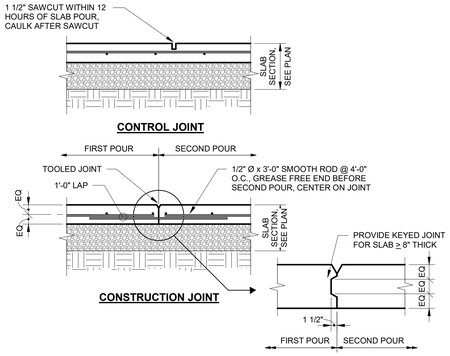

SLAB JOINT

3/4" = 1'-0"

6 S1.01

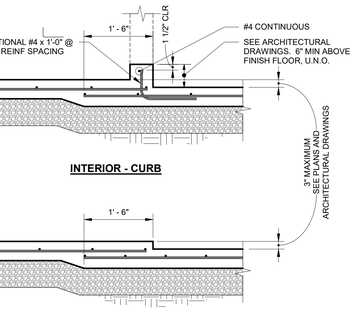

SLAB DEPRESSION

3/4" = 1'-0"

7 S1.01

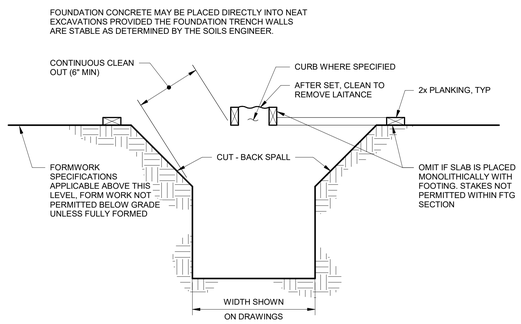

FORMING DETAIL

1" = 1'-0"

8 S1.01

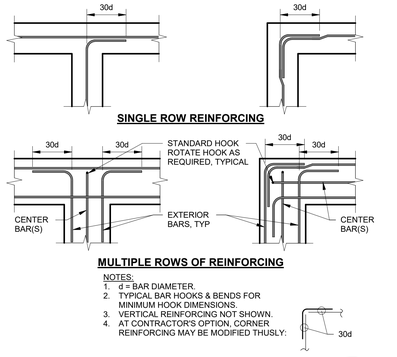

FOOTING, WALL & CURB INTERSECTIONS

3/4" = 1'-0"

9 S1.01

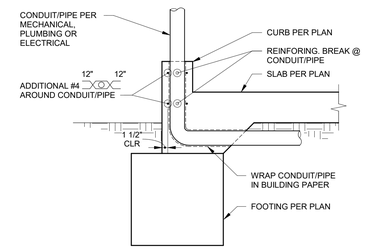

CURB PENETRATION

3/4" = 1'-0"

10 S1.01

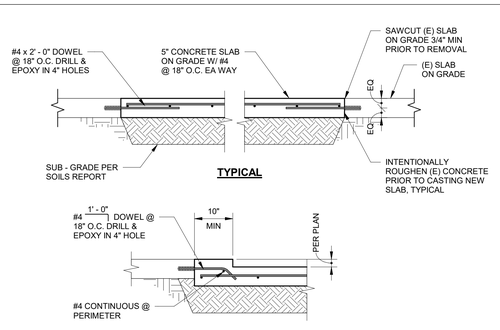

SLAB INFILL

3/4" = 1'-0"

11 S1.01

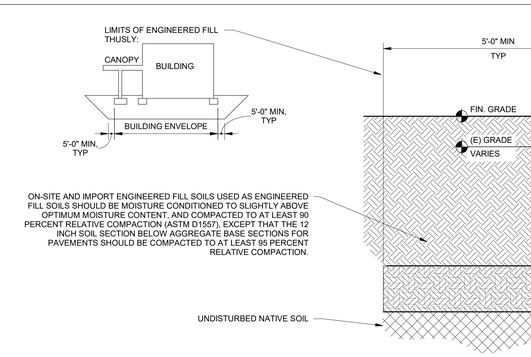

NOTES:
1. REMOVED AND/OR OVER-EXCAVATED SOILS FREE OF ORGANICS AND OTHER DELETERIOUS MATERIAL MAY BE USED AS ENGINEERED FILL. IF IMPORTED FILL IS REQUIRED, SEE GEOTECHNICAL REPORT FOR MATERIAL REQUIREMENTS.
2. ALL ENGINEERED FILL (INCLUDING SCARIFIED GROUND SURFACES AND BACKFILL) SHOULD BE PLACED IN LIFTS NO THICKER THAN WILL ALLOW FOR ADEQUATE BONDING AND COMPACTION (MAXIMUM 6 INCHES IN LOOSE THICKNESS).

TYPICAL BUILDING PAD PREPARATION

3/4" = 1'-0"

12 S1.01

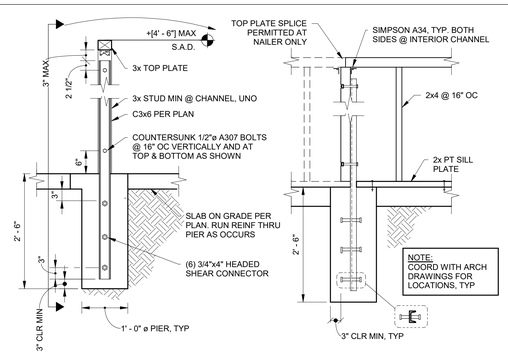

PARTIAL HEIGHT WALL SUPPORT

3/4" = 1'-0"

13 S1.01

DSA STAMP

IDENTIFICATION STAMP
DIV. OF THE STATE ARCHITECT
APP: 02-123307 INC:
REVIEWED FOR
SS ☑ FLS ☑ ACS ☑
DATE: 10/15/2025

CORNERSTONE structural engineering group
986 W. Alluvial Avenue, Suite 201
Fresno, California 93711
559.320.3200
fax 559.320.3201

Owner:

WASHINGTON UNIFIED SCHOOL DISTRICT

6041 SOUTH ELM AVE
FRESNO, CA 93706

Project Name:

STUDENT SERVICES

Project Address:

WASHINGTON UNION HIGH SCHOOL

6041 SOUTH ELM AVE,
FRESNO, CA 93706

integrated designs
by SOMAM, Inc.

ARCHITECTURE
ENGINEERING
INTERIOR DESIGN

6011 N. FRESNO STREET, SUITE 130
FRESNO CALIFORNIA 93710
P:(559) 436-0881 F:(559) 436-0887
E: design@somam.com
integrateddesigns.com

Ownership of Documents
This document, the ideas and designs incorporated herein, as an instrument of Professional Service is the property of Integrated Designs by SOMAM Inc. and is not to be used, in whole or in part for any other project without written authorization.
© COPYRIGHT 2022

Stamp:

REGISTERED PROFESSIONAL ENGINEER DUSTIN G. LEE No. 29503 EXP. 3/31/27 STRUCTURAL STATE OF CALIFORNIA

Sheet Title:

TYPICAL DETAILS No. 1

Job No.:

5613

Sheet No.:

S1.01

Release: Date:

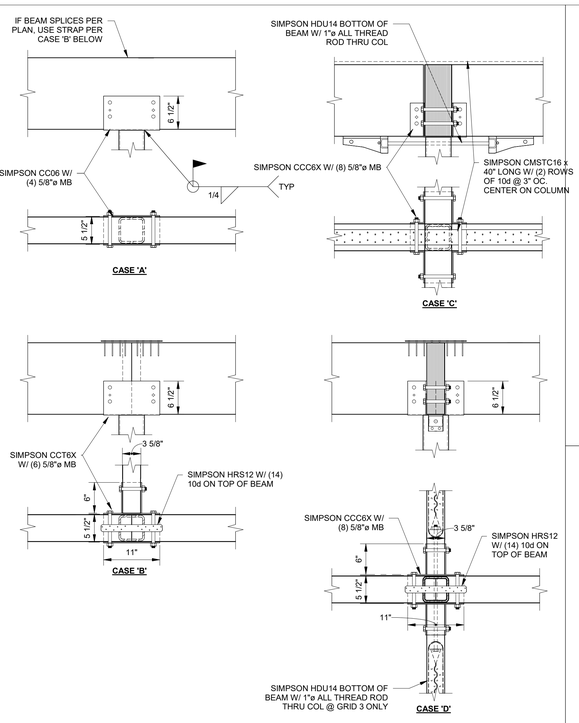

TOP OF HSS DETAIL

1" = 1'-0"

1 / S1.02

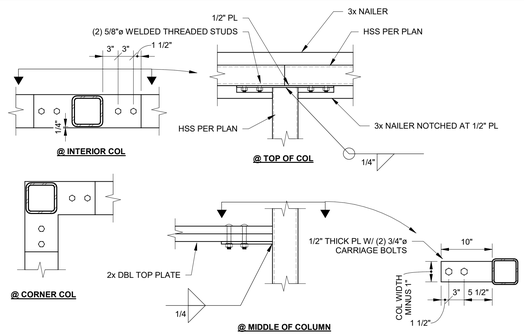

TYPICAL TOP OF HSS COL

1" = 1'-0"

2 / S1.02

SIMPSON CCQ/ECCQ SCHEDULE

BEAM	POST	COLUMN CAP	ALLOWABLE DOWN	
			CCQ	ECCQ
4x	4x6	SIMPSON CCQ46SDS2.5	24,065#	12,030#
6x	6x6	SIMPSON CCQ66SDS2.5	30,250#	18,905#
LVL 3.5	HSS	SIMPSON CCQQ5-SDS2.5	28,190#	17,615#
LVL 5.25	HSS	SIMPSON CCQQ5-SDS2.5	28,190#	17,615#

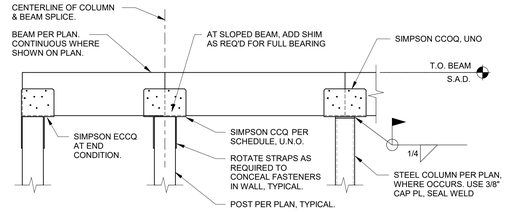

BEAM TO POST CONNECTION

NO SCALE

3 / S1.02

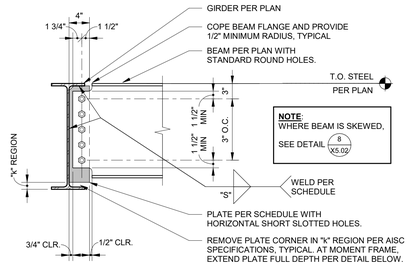

BEAM DEPTH LESS THAN OR EQUAL TO GIRDER

CONNECTION SCHEDULE

BEAM SIZE	PLATE (3)		WELD SIZE "S"	BOLTS (2)	AVAILABLE ALLOWABLE STRENGTH (5)
	MIN. DEPTH	THICKNESS		NO. & SIZE (1)	(KIPS)
W12x, C12x	9"	3/8"	5/16	(2) 3/4"Ø	29.4

NOTES:

1. FOR SINGLE COLUMN OF BOLTS, UNLESS NOTED OTHERWISE.
2. ALL BOLTS SHALL BE A325N AND ORIENTED IN THE SAME DIRECTION, UNLESS NOTED OTHERWISE.
3. STEEL PLATE SHALL BE ASTM A36, UNLESS NOTED OTHERWISE. AT COLLECTOR AND MOMENT CONNECTIONS, PLATE SHALL BE A572 GR. 50
4. COPE FLANGES OR LOCATE TAB PLATE TO BE 1/16" MIN. CLEAR OF "K" PER AISC SPECIFICATIONS.
5. AVAILABLE ALLOWABLE STRENGTHS ARE BASED ON TABULATED VALUES FROM "TABLE 10-10a" OF THE AISC STEEL CONSTRUCTION MANUAL (ASD), 15TH EDITION, USING E70XX ELECTRODES.

BEAM CONNECTION

1" = 1'-0"

4 / S1.02

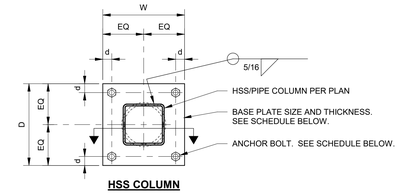

STEEL COLUMN PLATE SCHEDULE (2)

COLUMN	BASE PLATE					ANCHOR BOLT (1)
	D	W	tp	d	GRADE	
HSS5x	11"	11"	3/4"	1 1/2"	A36 (36KSI)	(4) 3/4"Ø
HSS6x	12"	12"	3/4"	1 1/2"	A36 (36KSI)	(4) 3/4"Ø
W14	SEE SPECIFIC DETAILS					

NOTES:

1. FOR ADDITIONAL ANCHOR BOLT REQUIREMENTS, SEE DETAIL 9 / S1.02
2. ALL BASE PLATE SHALL CONFORM TO THESE REQUIREMENTS UNLESS OTHERWISE NOTED.

BASE PLATE DETAIL

1" = 1'-0"

5 / S1.02

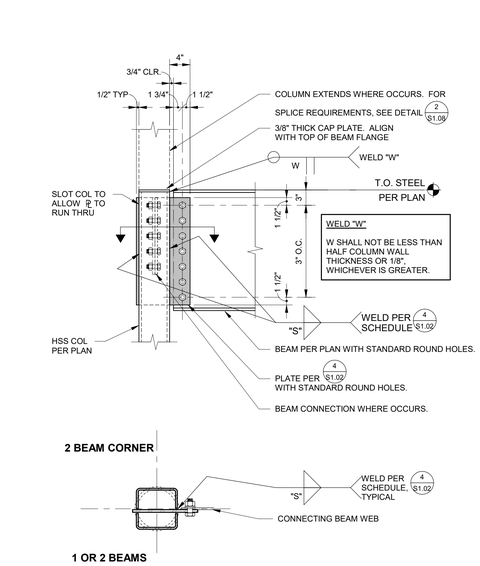

SECTION - MULTIPLE BEAM TO COLUMN

BEAM TO HSS/PIPE COLUMN

NO SCALE

6 / S1.02

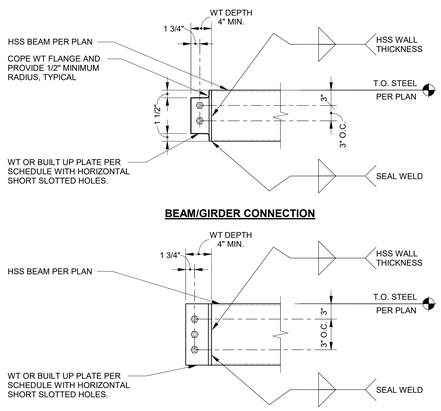

CONNECTION SCHEDULE

HSS WIDTH	WT OPTION	BUILT UP PLATE OPTION (2) (4)	
	SECTION	TAB PLATE	END PLATE
W ≤ 4"	WT4x14	3/8"	1/2"
4" < W ≤ 6"	WT4x20	3/8"	1/2"
6" < W ≤ 8"	WT5x27	3/8"	1/2"
W > 8"	-	1/2"	1/2"

NOTES:

1. FOR BOLTING REQUIREMENTS, REFER TO DETAIL 4 / S1.02
2. STEEL PLATE SHALL BE ASTM A36, UNLESS NOTED OTHERWISE.
3. CENTER TAB PLATE ON END PLATE. PROVIDE 5/16" FILLET WELD FROM TAB PLATE TO END PLATE, EACH SIDE.
4. REFER TO THE FOLLOWING DETAILS FOR ADDITIONAL CONNECTION INFORMATION:
   A. FOR BEAM CONNECTION, SEE 4 / S1.02
   B. FOR HSS COLUMN CONNECTION, SEE 6 / S1.02

BEAM CONNECTION

NO SCALE

7 / S1.02

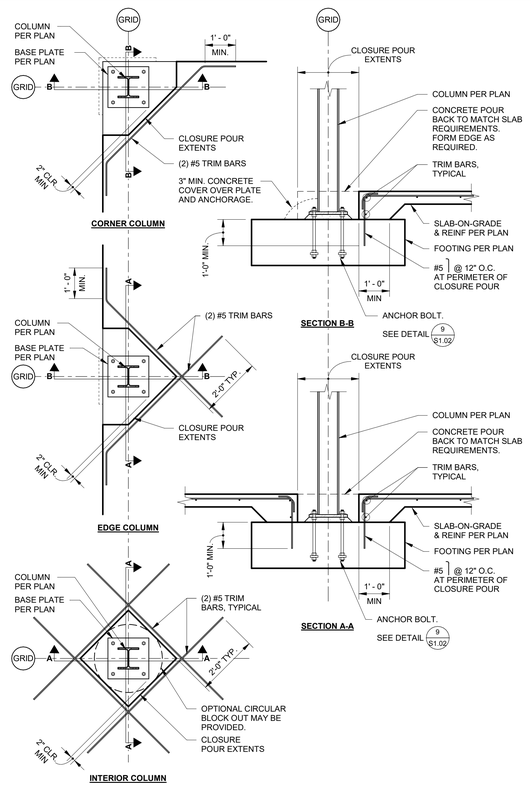

CLOSURE POUR DETAIL

1/2" = 1'-0"

8 / S1.02

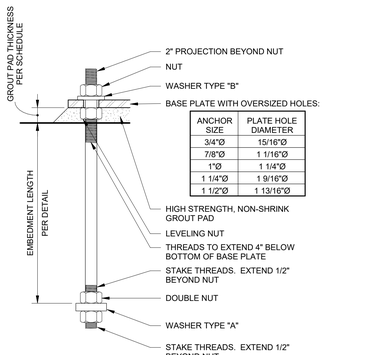

ANCHOR ROD		WASHER 1		HEX NUT	GROUT PAD THICKNESS
SIZE	MATERIAL	TYPE	SIZE		
3/4"Ø	F1554 GRADE 36	A	3"x1/2"x0'-3" PLATE W/ 13/16"Ø HOLE CENTERED	ASTM A563	1.5"
		B	2"x1/4" PLATE* W/ 13/16"Ø HOLE CENTERED		
7/8"Ø	F1554 GRADE 36	A	3"x3/4"x0'-3" PLATE W/ 15/16"Ø HOLE CENTERED	ASTM A563	1.5"
		B	2 1/2"x5/16" PLATE* W/ 15/16"Ø HOLE CENTERED		
1"Ø	F1554 GRADE 36	A	3"x3/4"x0'-3" PLATE W/ 1 1/16"Ø HOLE CENTERED	ASTM A563	1.5"
		B	3"x3/8" PLATE* W/ 1 1/16"Ø HOLE CENTERED		

1. CIRCULAR OR SQUARE WASHERS MEETING THE WASHER SIZE ARE ACCEPTABLE.

ANCHOR BOLT

1 1/2" = 1'-0"

9 / S1.02

DSA STAMP
IDENTIFICATION STAMP
DIV. OF THE STATE ARCHITECT
APP: 02-123307 INC:
REVIEWED FOR
SS ☑ FLS ☑ ACS ☑
DATE: 10/15/2025

CORNERSTONE structural engineering group
986 W. Alluvial Avenue, Suite 201
Fresno, California 93711
559.320.3200
fax 559.320.3201

Owner:

WASHINGTON UNIFIED SCHOOL DISTRICT

WASHINGTON UNIFIED SCHOOL DISTRICT

6041 SOUTH ELM AVE
FRESNO, CA 93706

Project Name:

STUDENT SERVICES

Project Address:

WASHINGTON UNION HIGH SCHOOL

6041 SOUTH ELM AVE,
FRESNO, CA 93706

integrated designs
by SOMAM, Inc.

ARCHITECTURE
ENGINEERING
INTERIOR DESIGN

6011 N. FRESNO STREET, SUITE 130
FRESNO CALIFORNIA 93710
P:(559) 436-0881 F:(559) 436-0887
E: design@somam.com
integrateddesigns.com

Ownership of Documents

This document, the ideas and designs incorporated herein, as an instrument of Professional Service is the property of Integrated Design by SOMAM Inc. and is not to be used, in whole or in part for any other project without written authorization.

© COPYRIGHT 2022

Stamp:

REGISTERED PROFESSIONAL ENGINEER DUSTIN G. LEE No. S6603 EXP. 3/31/27 STRUCTURAL STATE OF CALIFORNIA

Sheet Title:

TYPICAL DETAILS No. 2

Job No.:

5613

Sheet No.:

S1.02

Release: Date:

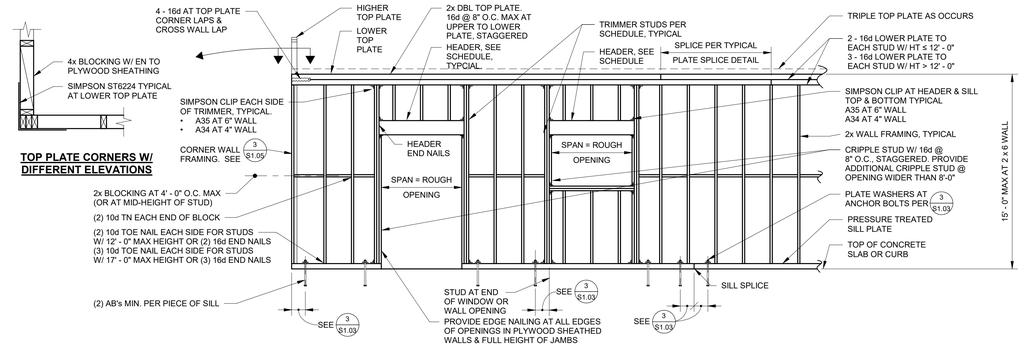

STUDWALL FRAMING

3/8" = 1'-0"

1 S1.03

STUD WALL FRAMING SCHEDULE[1]
DEFLECTION LIMIT = L/360 (BEARING); L/240 (NON-BEARING)

OPENING SIZE	NON BEARING WALL HEADER 2x, S.A.D. FOR STUD WIDTH	BEARING WALL HEADER SIZE 2 x 6 WALL	SILL SIZE	TRIMMER	HEADER END NAILS
4' - 0" MAX	STUD WIDTH x 6	6 x 6	(2) 2x	(2) 2x	4 - 16d EA END
6' - 0" MAX	STUD WIDTH x 8	6 x 8	(2) 2x		4 - 16d EA END
8' - 0" MAX	STUD WIDTH x 10	6 x 10	(2) 2x	(3) 2x	4 - 16d EA END
10' - 6" MAX	STUD WIDTH x 12	6 x 12	(3) 2x	6x[2]	4 - 16d EA END

1. SCHEDULE BASED ON 30 PSF WIND LOAD (BEARING); 5 PSF WIND LOAD (INTERIOR NON-BEARING)
2. SEE HEADER ASSEMBLY DETAIL.
3. @ 2x6 WALLS

MINIMUM NAILING SCHEDULE

CONNECTION	NAILING[1]
1. JOIST TO SILL GIRDER, TOENAIL 8 - INCH JOIST OR LESS FOR EACH ADDITIONAL 4 INCHES IN DEPTH OF JOIST	 3 - 16d 1 - 16d
2. BRIDGING TO JOIST, TOENAIL EACH END a. BLOCKING BETWEEN JOISTS OR RAFTERS - TO JOIST OR RAFTERS - TOENAILS EACH SIDE, EACH END b. BLOCKING BETWEEN STUDS, EACH END	2 - 8d 2 - 10d[12] 2 - 10d TOENAILS OR 2 - 16d
3. 1" x 6" (25mm x 152mm) SUBFLOOR OR LESS TO EACH JOIST, FACE NAIL.	2 - 8d
4. WIDER THAN 1" x 6" (25mm x 152mm) SUBFLOOR TO EACH JOIST, FACE NAIL.	3 - 8d
5. 2" (51mm) SUBFLOOR TO JOIST OR GIRDER, BLIND AND FACE NAIL	2 - 16d
6. SOLE PLATE TO JOIST OR BLOCKING, TYPICAL FACE NAIL. SOLE PLATE TO JOIST BLOCKING, AT BRACED WALL PANELS.	16d AT 16" (406mm) O.C. 3 - 16d PER 16" (406mm)
7. TOP PLATE TO STUD, END NAIL.	2 - 16d
8. STUD TO SOLE PLATE.	4 - 8d, TOENAIL OR 2 - 16d, END NAIL
9. DOUBLE STUDS, FACE NAIL.	16d AT 24" (610mm) O.C.
10. DOUBLED TOP PLATES, TYPICAL FACE NAIL. DOUBLED TOP PLATES, LAP SPLICE.	16d AT 16" (406mm) O.C. 8 - 16d
11. BLOCKING BETWEEN JOISTS OR RAFTERS TO TOP PLATE, TOENAIL	3 - 8d
12. RIM JOIST TO TOP PLATE, TOENAIL	8d AT 6" (152mm) O.C.
13. TOP PLATES, LAPS AND INTERSECTIONS, FACE NAIL.	2 - 16d
14. CONTINUOUS HEADER, TWO PIECES.	16d AT 16" (406mm) O.C. ALONG EACH EDGE
15. CEILING JOISTS TO PLATE, TOENAIL.	3 - 8d
16. CONTINUOUS HEADER TO STUD, TOENAIL.	4 - 8d
17. CEILING JOISTS, LAPS OVER PARTITIONS, FACE NAIL.	3 - 16d
18. CEILING JOISTS TO PARALLEL RAFTERS, FACE NAIL.	3 - 16d
19. JOIST OR RAFTERS AT ALL BEARINGS - TOENAILS, EACH SIDE.	3 - 8d
20. 1" (25mm) BRACE TO EACH STUD AND PLATE, FACE NAIL.	2 - 8d
21. 1" x 8" (25mm x 203mm) SHEATHING OR LESS TO EACH BEARING, FACE NAIL.	3 - 8d
22. WIDER THAN 1" x 8" (25mm x 203mm) SHEATHING TO EACH BEARING, FACE NAIL.	3 - 8d
23. BUILT - UP CORNER STUDS.	16d AT 24" (610mm) O.C.
24. BUILT - UP GIRDER AND BEAMS.	20D AT 32" (813mm) O.C. AT TOP AND BOTTOM AND STAGGERED 2 - 20d AT ENDS AND AT EACH SPLICE
25. 2" (51mm) PLANKS	2 - 16d AT EACH BEARING
26. COLLAR TIE TO RAFTER, FACE NAIL.	3 - 10d
27. JACK RAFTER TO HIP.	3 - 10d, TOENAIL OR 2 - 16d, FACE NAIL
28. ROOF RAFTER TO 2x RIDGE BEAM	2 - 10d, TOENAIL OR 2 - 16d, FACE NAIL
29. JOIST TO BAND JOIST, FACE NAIL	3 - 16d
30. LEDGER STRIP, FACE NAIL.	3 - 16d
31. WOOD STUCTURAL PANELS AND PARTICLEBOARD: [2] SUBFLOOR AND WALL SHEATHING (TO FRAMING): 1/2" (12.7 mm) AND LESS 19/32" - 3/4" (15mm - 19mm) 7/8" - 1" (22mm - 25mm) COMBINATION SUBFLOOR - UNDERLAYMENT (TO FRAMING): 3/4" (19mm) AND LESS 7/8" - 1" (22mm - 25mm) 1 1/8" - 1 1/4" (29mm - 32mm)	 6d [3] 8d OR 6d [4] 8d [5] 10d OR 8d [5] 6d [5] 8d [5] 10d OR 8d
32. PANEL SIDING (TO FRAMING) : 1/2" (12.7mm) AND LESS 5/8" (16mm)	 6d [6] 8d [6]
33. FIBERBOARD SHEATHING: 1/2" (12.7mm) 25/32" (20mm)	 No. 11 ga. [8] 8d [7] No. 16 ga. [9] No. 11 ga. [8] 8d [7] No. 16 ga. [9]
34. INTERIOR PANELING: 1/4" (6.4mm) 3/8" (9.5mm)	 4d [10] 6d [11]

1 COMMON NAILS SHALL BE USED EXCEPT WHERE OTHERWISE STATED.
2 NAILS SPACED AT 6 INCHES (152mm) ON CENTER AT EDGES, 12 INCHES (305mm) AT INTERMEDIATE SUPPORTS EXCEPT 6 INCHES (152mm) AT ALL SUPPORTS WHERE SPANS ARE 48 INCHES (1219mm) OR MORE. FOR NAILING OF WOOD STRUCTURAL PANEL AND PARTICLEBOARD DIAPHRAGMS AND SHEAR WALLS, REFER TO SECTION 2305. NAILS FOR WALL SHEATHING MAY BE COMMON.
3 COMMON OR DEFORMED SHANK.
4 COMMON.
5 DEFORMED SHANK.
6 CORROSION-RESISTANT SIDING OR CASING NAILS CONFORMING TO THE REQUIREMENTS OF SECTION 2304.10.2.1.
7 FASTENERS SPACED 3 INCHES (76mm) ON CENTER AT EXTERIOR EDGES AND 6 INCHES (152mm) ON CENTER AT INTERMEDIATE SUPPORTS.
8 CORROSION-RESISTANT ROOFING NAILS WITH 7/16-INCH-DIAMETER (11mm) HEAD AND 11/2-INCH (38mm) LENGTH FOR 1/2-INCH (12.7mm) SHEATHING AND 13/4-INCH (44mm) LENGTH FOR 25/32-INCH (20mm) SHEATHING CONFORMING TO THE REQUIREMENTS OF SECTION 2304.10.2.1.
9 CORROSION-RESISTANT STAPLES WITH NOMINAL 7/16-INCH (11mm) CROWN AND 11/8-INCH (29mm) LENGTH FOR 1/2-INCH (12.7mm) SHEATHING AND 11/2-INCH (38mm) LENGTH FOR 25/32-INCH (20mm) SHEATHING CONFORMING TO THE REQUIREMENTS OF SECTION 2304.10.2.1.
10 PANEL SUPPORTS AT 16 INCHES (406mm) [20 INCHES (508mm) IF STRENGTH AXIS IN THE LONG DIRECTION OF THE PANEL, UNLESS OTHERWISE MARKED]. CASING OF FINISH NAILS SPACED 6 INCHES (152mm) ON PANEL EDGES. 12 INCHES (305mm) AT INTERMEDIATE SUPPORTS.
11 PANEL SUPPORTS AT 24 INCHES (610mm). CASING OR FINISH NAILS SPACED 6 INCHES (152mm) ON PANEL EDGES, 12 INCHES (305mm) AT INTERMEDIATE SUPPORTS.
12 WHEN POSSIBLE, NAILS DRIVEN PERPENDICULAR TO GRAIN SHALL BE USED INSTEAD OF TOENAILS.

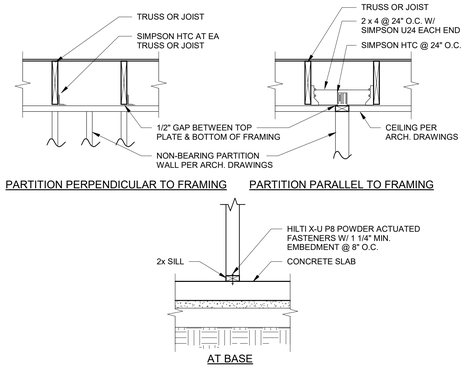

NON-BEARING WALL PARTITION

3/4" = 1'-0"

2 S1.03

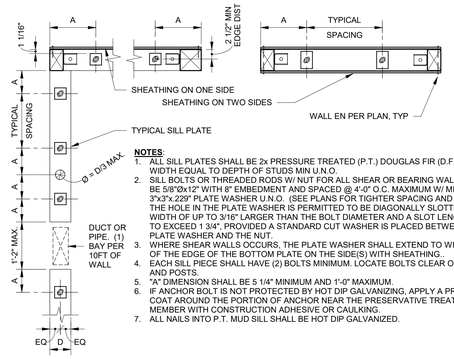

NOTES:
1. ALL SILL PLATES SHALL BE 2x PRESSURE TREATED (P.T.) DOUGLAS FIR (D.F.) OF WIDTH EQUAL TO DEPTH OF STUDS MIN U.N.O.
2. SILL BOLTS OR THREADED RODS W/ NUT FOR ALL SHEAR OR BEARING WALLS SHALL BE 5/8"ø X12" WITH 8" EMBEDMENT AND SPACED @ 4'-0" O.C. MAXIMUM W/ MINIMUM 3"x3"x.229" PLATE WASHER U.N.O. (SEE PLANS FOR TIGHTER SPACING AND DETAIL) THE HOLE IN THE PLATE WASHER IS PERMITTED TO BE DIAGONALLY SLOTTED WITH A WIDTH OF UP TO 3/16" LARGER THAN THE BOLT DIAMETER AND A SLOT LENGTH NOT TO EXCEED 1 3/4", PROVIDED A STANDARD CUT WASHER IS PLACED BETWEEN THE PLATE WASHER AND THE NUT.
3. WHERE SHEAR WALLS OCCURS, THE PLATE WASHER SHALL EXTEND TO WITHIN 1/2" OF THE EDGE OF THE BOTTOM PLATE ON THE SIDE(S) WITH SHEATHING..
4. EACH SILL PIECE SHALL HAVE (2) BOLTS MINIMUM. LOCATE BOLTS CLEAR OF STUDS AND POSTS.
5. "A" DIMENSION SHALL BE 5 1/4" MINIMUM AND 1'-0" MAXIMUM.
6. IF ANCHOR BOLT IS NOT PROTECTED BY HOT DIP GALVANIZING, APPLY A PROTECTIVE COAT AROUND THE PORTION OF ANCHOR NEAR THE PRESERVATIVE TREATED WOOD MEMBER WITH CONSTRUCTION ADHESIVE OR CAULKING.
7. ALL NAILS INTO P.T. MUD SILL SHALL BE HOT DIP GALVANIZED.

SILL PLATE AND ANCHOR BOLT

3/4" = 1'-0"

3 S1.03

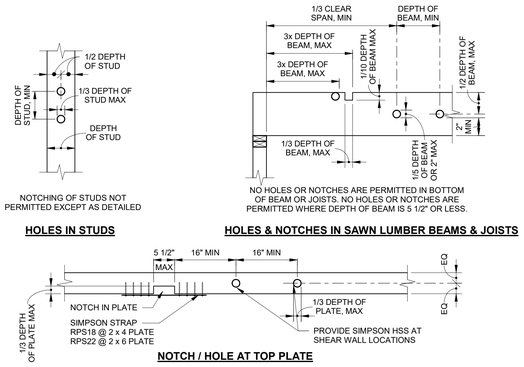

NOTCH/HOLE IN FRAMING

3/4" = 1'-0"

4 S1.03

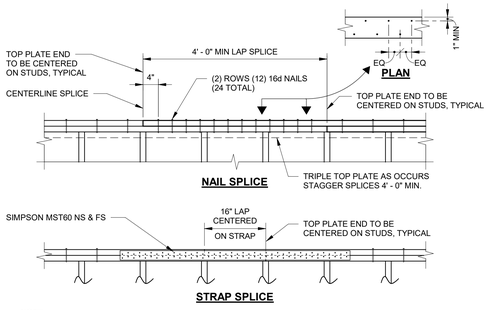

NOTE:
1. USE NAIL SPLICE UNLESS NOTED OTHERWISE ON PLANS.
2. AT PLYWOOD WALLS, STRAP MAY BE INSTALLED OVER PLYWOOD AND TAKE PLACE OF EDGE NAILING.

PLATE SPLICE DETAIL

3/4" = 1'-0"

5 S1.03

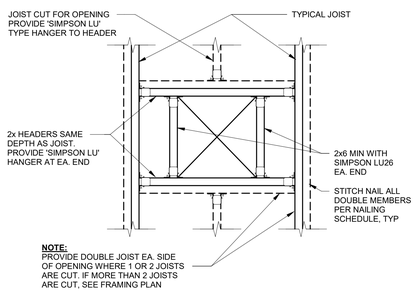

NOTE:
PROVIDE DOUBLE JOIST EA. SIDE OF OPENING WHERE 1 OR 2 JOISTS ARE CUT. IF MORE THAN 2 JOISTS ARE CUT, SEE FRAMING PLAN

WOOD - TYP FRMG AT CLG OPENINGS

NO SCALE

6 S1.03

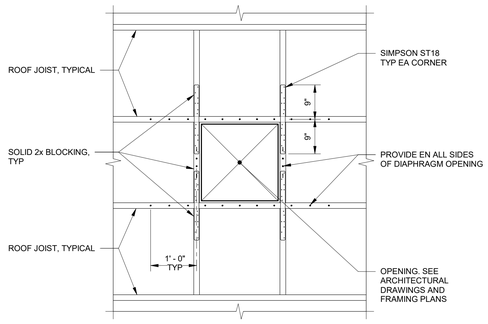

NOTE: MAXIMUM OPENING SIZE NOT TO EXCEED JOIST SPACING.

SMALL ROOF OPENING

3/4" = 1'-0"

7 S1.03

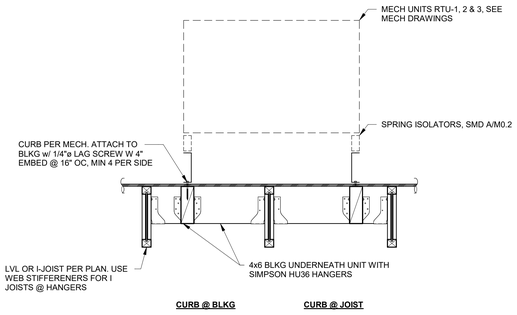

TYPICAL MECHANICAL CURB DETAIL

1" = 1'-0"

8 S1.03

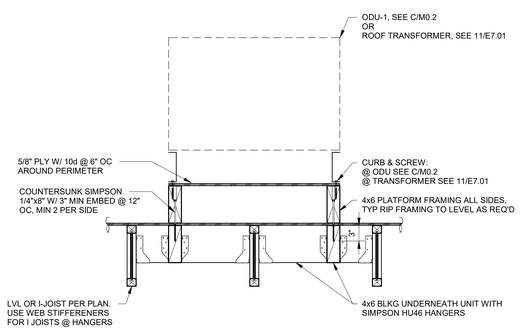

TYPICAL MECHANICAL PLATFORM DETAIL

1" = 1'-0"

9 S1.03

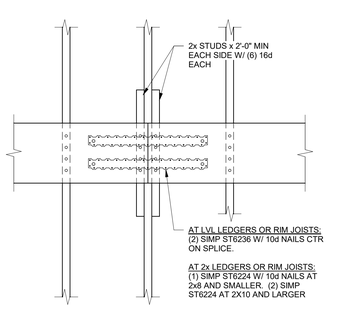

LEDGER & RIM JOIST SPLICE UON

1" = 1'-0"

10 S1.03

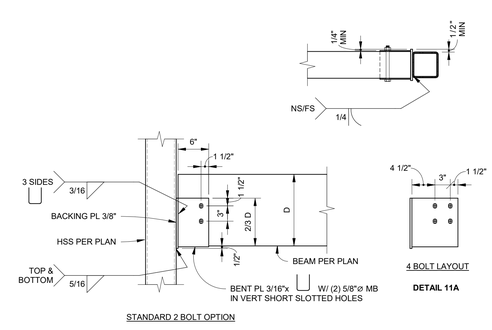

DETAIL 11A

LVL TO HSS COLUMN

1" = 1'-0"

11 S1.03

CORNERSTONE structural engineering group
986 W. Alluvial Avenue, Suite 201
Fresno, California 93711
559.320.3200
fax 559.320.3201

integrated designs
by SOMAM, Inc.
ARCHITECTURE
ENGINEERING
INTERIOR DESIGN
6011 N. FRESNO STREET, SUITE 130
FRESNO CALIFORNIA 93710
P:(559) 436-0881 F:(559) 436-0887
E: design@somam.com
integrateddesigns.com

Ownership of Documents
This document, the ideas and designs incorporated herein, as an instrument of Professional Service is the property of Integrated Designs by SOMAM Inc. and is not to be used, in whole or in part for any other project without written authorization.
© COPYRIGHT 2022

DSA STAMP
IDENTIFICATION STAMP
DIV. OF THE STATE ARCHITECT
APP: 02-123307 INC:
REVIEWED FOR
SS ☑ FLS ☑ ACS ☑
DATE: 10/15/2025

Owner:
WASHINGTON UNIFIED SCHOOL DISTRICT

WASHINGTON UNIFIED SCHOOL DISTRICT
6041 SOUTH ELM AVE
FRESNO, CA 93706

Project Name:
STUDENT SERVICES

Project Address:
WASHINGTON UNION HIGH SCHOOL
6041 SOUTH ELM AVE,
FRESNO, CA 93706

Stamp:
REGISTERED PROFESSIONAL ENGINEER DUSTIN G. LEE No. 99603 EXP. 3/31/27 STRUCTURAL STATE OF CALIFORNIA

Sheet Title:
TYPICAL DETAILS No. 3

Job No.:
5613

Sheet No.:
S1.03

Release: Date:

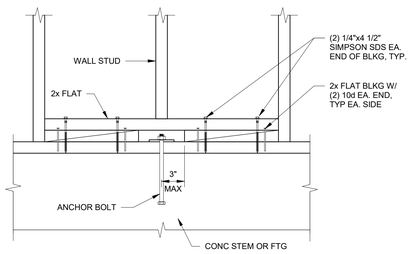

WOOD - ANCHOR BOLTS AT WOOD STUD

NO SCALE

1 S1.04

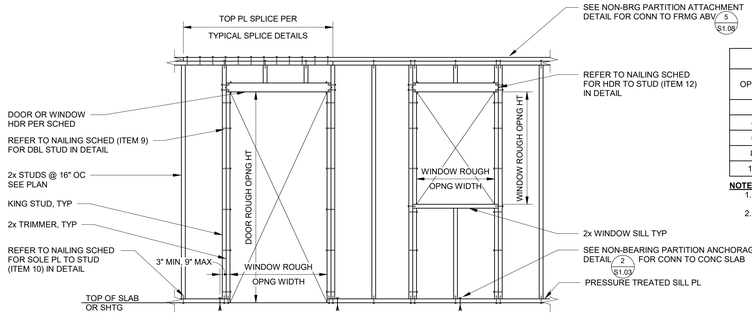

HEADER SCHEDULE		
OPENING WIDTH	2x4 WALL HEADER	2x6 WALL HEADER
<4'-0"	4x4	4x6 FLAT
4'-0" - 6'-0"	4x4	4x6 FLAT
6'-0" - 8'-0"	4x6	4x6 FLAT
8'-0" - 10'-0"	4x6	6x6
10'-0" - 12'-0"	4x8	6x8

NOTE:
1. HEADERS, KING STUDS AND OTHER REFERENCES ON PLAN GOVERNOVER THESE TYPICAL SCHEDULES/DETAILS.
2. NAIL SILL PLATE TO WOOD FRAMED FLOORS WITH 16d @ 12" O.C.

INTERIOR NON-BEARING PARTITION WALL FRAMING

1" = 1'-0"

2 S1.04

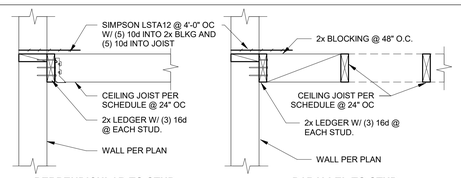

PERPENDICULAR TO STUD **PARALLEL TO STUD**

CEILING JOIST SCHEDULE				
JOIST	MAX SPAN		LEDGER NAILS	BLOCKING
	INT. COND. GYP BOARD	EXT. COND. PLASTER		
2x6 @ 24" oc	10'-0"	9'-0"	(2) 16d	@ MIDSPAN
2x8 @ 24" oc	14'-0"	12'-0"	(3) 16d	@ 1/3 PTS
2x10 @ 24" oc	16'-0"	15'-0"	(3) 16d	@ 1/3 PTS

NOTES:
1. SEE ARCHITECTURAL DRAWINGS FOR CEILING LOCATIONS AND FRAMING DETAILS NOT NOTED.
2. RUN WALL PLYWOOD CONTINUOUS PAST LEDGER AS OCCURS.
3. USE SIMPSON LUS HANGERS OR EQUIVALENT
4. SEE PLAN FOR CEILING JOIST SIZE @ STORAGE AREAS.
5. DESIGN LOADS: DL = 8PSF AT GYP BD, 13 PSF AT PLASTER, LL = 10 PSF, W = VARIES AT FIRE RATED CONSTRUCTION, SPACE CEILING JOISTS @ 16" OC WHERE REQUIRED PER ARCH DRAWINGS.
6. SEE 6 S1.03 FOR FRAMING OPENINGS OR RECESSED FRAMES

WOOD CEILING JOIST FRAMING DETAIL

1" = 1'-0"

6 S1.04

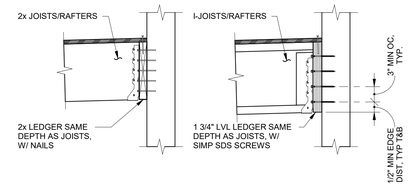

JOISTS	LEDGER	NAILS/SCREWS EA STUD UON
2x12	2x12	(5) - 16d
14" I-JOIST	1 3/4"x14" LVL	(4) 1/4"DIA x 4 1/2" SIMP SDS SCREWS

NOTES:
1. IF SPLITTING OCCURS, REPLACE MEMBER AND PRE-DRILL HOLES.

LEDGER DETAIL

1" = 1'-0"

4 S1.04

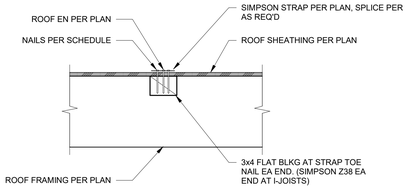

MODEL No.	NAILING
CS	10d @ 4 1/8" oc STAGG'D
CMST	10d @ 3 1/2" oc STAGG'D
CMSTC	10d @ 3" OC STAGG'D

TYPICAL ROOF STRAP

1 1/2" = 1'-0"

5 S1.04

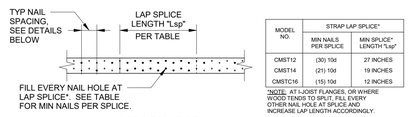

MODEL NO.	STRAP LAP SPLICE*	
	MIN NAILS PER SPLICE	MIN SPLICE* LENGTH "Lsp"
CMST12	(30) 10d	27 INCHES
CMST14	(21) 10d	19 INCHES
CMSTC16	(15) 10d	12 INCHES

*NOTE: AT I-JOIST FLANGES, OR WHERE WOOD TENDS TO SPLIT, FILL EVERY OTHER NAIL HOLE AT SPLICE AND INCREASE LAP LENGTH ACCORDINGLY.

LAP SPLICE AT "CMST" OR "CMSTC" STRAP

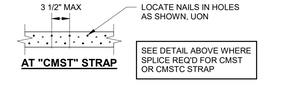

AT "CMST" STRAP **AT "CMSTC" STRAP** **AT "CS" STRAP**

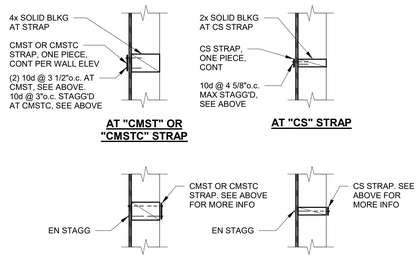

AT "CMST" OR "CMSTC" STRAP

AT "CS" STRAP

AT "CMST" OR "CMSTC" STRAP ON OPP SIDE OF WALL PLYWD

AT "CS" STRAP ON OPP SIDE OF WALL PLYWD

STRAP DETAIL

1" = 1'-0"

3 S1.04

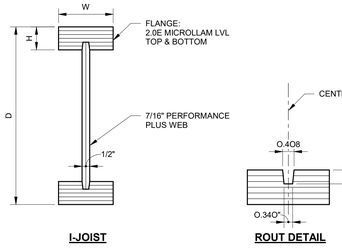

I-JOIST

ROUT DETAIL

SECTION PROPERTIES @ 100%						
JOIST TYPE	D	W	H	EI (JOIST) 10^6 LBS-IN^2	M ALLOW FT-LBS	V ALLOW LBS
RED-I45	14"	1 3/4"	1 1/2"	474	9,260	2,700

NOTE: FLANGE TOLERANCE 1/32" +/-

I-JOIST SECTION PROPERTIES

3" = 1'-0"

7 S1.04

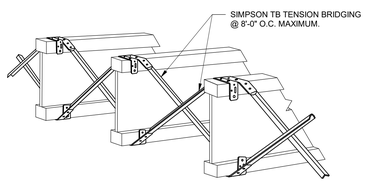

NOTE:
1. TENSION BRIDGING IS REQUIRED AT 8'-0" O.C. IN FLOORS & ROOFS, U.N.O.
2. TENSION BRIDGING SHALL BE USED IN CROSS PAIRS FULL LENGTH OF FLOOR.
3. INSTALL BRIDGING TIGHTLY.
4. REFER TO MANUFACTURER FOR ADDITIONAL INFORMATION.

I-JOIST CROSS BRIDGING

1 1/2" = 1'-0"

8 S1.04

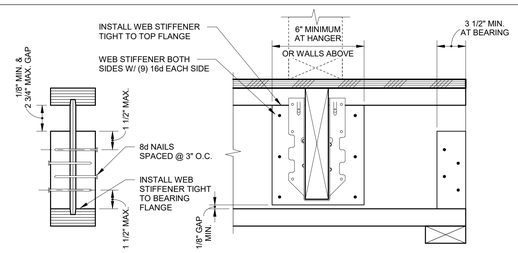

WEB STIFFENER SECTION **WEB STIFFENER ELEVATION**

NOTE:
1. PROVIDE MINIMUM BEARING OF 3 1/2" AT JOIST ENDS AND 5 1/4" AT INTERMEDIATE SUPPORTS U.N.O. ON STRUCTURAL DRAWINGS. NAIL JOISTS AT BEARING WITH 2-10d NAILS (ONE EACH SIDE), 1 1/2" MINIMUM FROM END TO AVOID SPLITTING. ALL BLOCKING SHALL BE GLUED TO WEB.
2. WEB STIFFENERS TO BE MANUFACTURER OR FIELD INSTALLED AT ALL BEARING AND JOIST HANGER LOCATIONS.
3. AT JOIST BEARING, USE 5/8"x3 1/2" SHEATHING WITH MIN (4) 8d NAILS AT EACH SIDE WHERE WEB STIFFENER IS CALLED OUT.
4. IF MANUFACTURER FASTENER INFORMATION DIFFERS FROM THIS DETAIL, FOLLOW THE MANUFACTURER'S REQUIREMENTS.
5. WHERE BEARING OCCURS AT TOP AND BOTTOM FLANGE, STIFFENER SHALL BE FULL DEPTH OF WEB.

I - JOIST WEB STIFFENER

3" = 1'-0"

9 S1.04

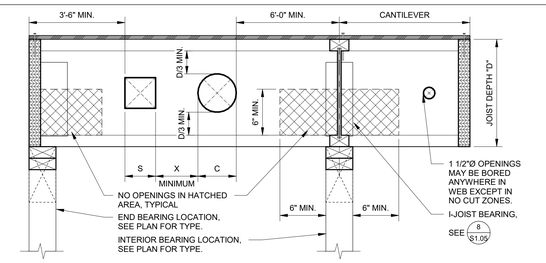

NOTES:
1. ALL OPENINGS LARGER THAN 1 1/2"Ø MUST BE PLACED IN CENTER THIRD OF I-JOIST DEPTH.
2. MAXIMUM SQUARE OPENING SIZE (S) IS 4" SQUARE.
3. MAXIMUM ROUND OPENING SIZE (C) IS 5"Ø.
4. DO NOT CUT FLANGE.
5. WHERE LARGER OPENINGS ARE REQUIRED CONTACT STRUCTURAL ENGINEER PRIOR TO CUTTING FOR ADDITIONAL REINFORCEMENT INFORMATION.
6. THE MINIMUM SPACING "X" SHALL BE THE GREATER OF 2 x S OR 2 x C.
7. NO OPENINGS LARGER THAN 1 1/2" Ø ALLOWED IN CANTILEVER.
8. USE 1/4"Ø PILOT HOLE @ CORNERS OF SQUARE/RECTANGULAR OPENINGS TO PREVENT OVER-CUTTING.

ALLOWABLE OPENINGS IN I-JOISTS

1 1/2" = 1'-0"

10 S1.04

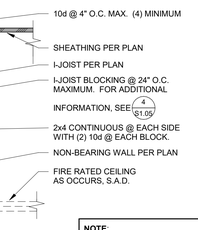

PARALLEL

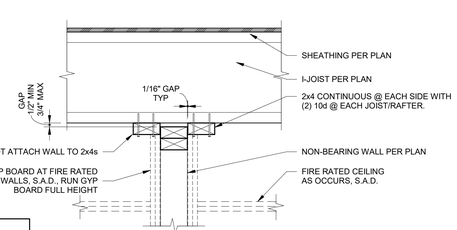

PERPENDICULAR

NOTE:
INSTALL NON-BEARING WALL ONLY AFTER DEAD LOADS HAVE BEEN APPLIED.

NON-BEARING WALL

1 1/2" = 1'-0"

11 S1.04

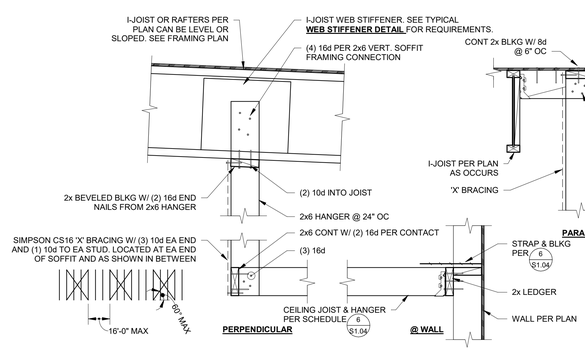

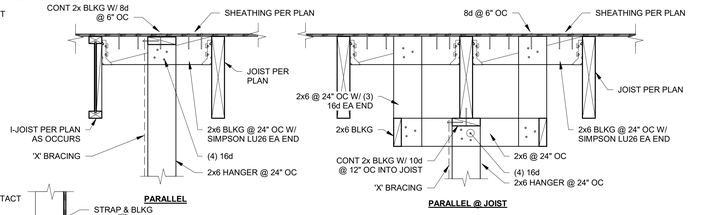

SOFFIT FRAMING

NO SCALE

12 S1.04

DSA STAMP
IDENTIFICATION STAMP
DIV. OF THE STATE ARCHITECT
APP: 02-123307 INC:
REVIEWED FOR
SS ☑ FLS ☑ ACS ☑
DATE: 10/15/2025

CORNERSTONE structural engineering group
986 W. Alluvial Avenue, Suite 201
Fresno, California 93711
559.320.3200
fax 559.320.3201

Owner:

WASHINGTON UNIFIED SCHOOL DISTRICT

WASHINGTON UNIFIED SCHOOL DISTRICT

6041 SOUTH ELM AVE
FRESNO, CA 93706

Project Name:

STUDENT SERVICES

Project Address:

WASHINGTON UNION HIGH SCHOOL

6041 SOUTH ELM AVE,
FRESNO, CA 93706

integrated designs
by SOMAM, Inc.

ARCHITECTURE
ENGINEERING
INTERIOR DESIGN

6011 N. FRESNO STREET, SUITE 130
FRESNO CALIFORNIA 93710
P:(559) 436-0881 F:(559) 436-0887
E: design@somam.com
integrateddesigns.com

Ownership of Documents

This document, the ideas and designs incorporated herein, as an instrument of Professional Service is the property of Integrated Design by SOMAM Inc. and is not to be used, in whole or in part for any other project without written authorization.

© COPYRIGHT 2022

Stamp:

REGISTERED PROFESSIONAL ENGINEER DUSTIN G. LEE M. 28603 EXP. 3/31/27 STRUCTURAL STATE OF CALIFORNIA

Sheet Title:

TYPICAL DETAILS No. 4

Job No.:

5613

Sheet No.:

S1.04

Release: Date:

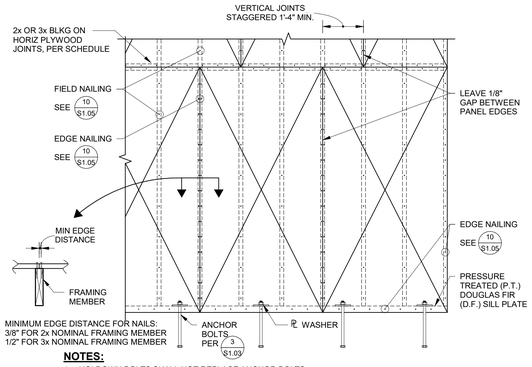

NOTES:

1. HOLDOWN BOLTS SHALL NOT REPLACE ANCHOR BOLTS.
2. RETIGHTEN ALL ANCHOR BOLTS AND HOLDOWN NUTS PRIOR TO CLOSING FRAMING.
3. NAILS SHALL BE COMMON AND HAVE MIN 1 5/8" PENETRATION INTO HOLDING MEMBER.
4. PREDRILL HOLES AS REQUIRED TO AVOID SPLITTING.
5. MINIMUM PLYWOOD WIDTH IS 24".
6. UPSET THREAD BOLTS ARE NOT PERMITTED.

ELEVATION

SHEARWALL SCHEDULE - WOOD - DSA

ZONE	ALLOWABLE SHEAR	PLYWOOD	EDGE NAILING	FIELD NAILING	BOLTED PLATE CONNECTION	SCREWED PLATE CONNECTION	BLOCKING	A35 SPACING	REMARKS
A	310 PLF	15/32" CDX	10d @ 6" OC	10d @ 12" OC	AB @ 48" OC	1/4" x 6" SDS @ 16" OC	2x	16" OC	1, 3, 4
B	460 PLF	15/32" CDX	10d @ 4" OC	10d @ 12" OC	AB @ 32" OC	1/4 x 6" SDS @ 8" OC	3x	12" OC	2, 3, 4
C	600 PLF	15/32" CDX	10d @ 3" OC	10d @ 12" OC	AB @ 24" OC	1/4 x 6" SDS @ 8" OC	3x	8" OC	2, 3, 4
D	770 PLF	15/32" CDX	10d @ 2" OC	10d @ 12" OC	AB @ 16" OC	1/4 x 6" SDS @ 6" OC	3x	8" OC	2, 3, 4

NOTE:

WHEN PLY IS SHOWN BOTH SIDES, OFFSET PANEL JOINTS EACH SIDE OF WALL TO FALL ON DIFFERENT FRAMING MEMBERS. INSTALL 3x OR WIDER FRAMING & BLOCKING AT ALL ADJOINING PANEL EDGES. ANCHOR BOLT, SCREW & A35LTP4 SPACING SHOULD BE HALVED.

REMARKS:

1. INSTALL 2x OR WIDER FRAMING & BLOCKING AT ALL ADJOINING PANEL EDGES.
2. INSTALL 3x OR WIDER FRAMING & BLOCKING WITH STAGGERED EDGE NAILING AT ALL ADJOINING PANEL EDGES. STRUCTURALLY ACCEPTABLE TO USE (2) 2x INSTEAD OF 3x AT ADJOINING PANEL EDGES. NAIL (2) 2x TOGETHER WITH 16d STAGGERED @ WALL EDGE NAIL SPACING.
3. FASTENERS SHALL BE COMMON.
4. PLYWOOD SHALL BE EDGE FASTENED AT ALL PANEL EDGES, TOP PLATES, SILL PLATES, HOLDOWN STUDS, WOOD POSTS AND BLOCKING LOCATIONS AS WELL AS OTHER LOCATIONS SHOWN IN THE DRAWINGS.
5. WHEN NAILING IS SPECIFIED AT AN (E) 2x STUDWALL, PROVIDE ADDITIONAL 2x FRAMING AT PANEL EDGES. EDGE NAIL ONE PANEL TO EA 2x STAGGERED PER SCHEDULE. INTERNAIL DOUBLE 2x W/ 2 ROWS OF 10d @ 8" OC STAGGERED.

PLYWOOD SHEARWALL

1" = 1'-0"

1 S1.05

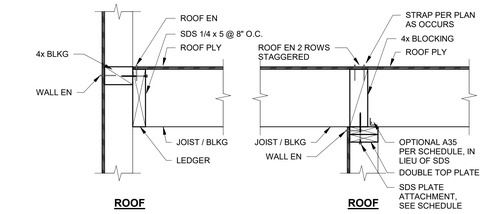

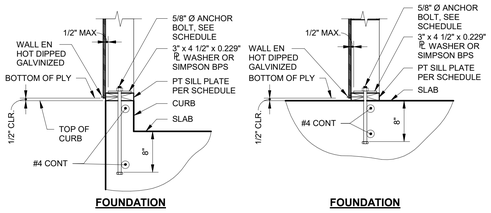

TYPICAL EXTERIOR WALL

TYPICAL INTERIOR WALL

NOTES:

1. FRAMING AND CONNECTIONS SHOWN ARE FOR LATERAL SYSTEM LOAD TRANSFER ONLY. SEE PLANS AND DETAILS FOR ADDITIONAL VERTICAL SUPPORT FRAMING.
2. PROVIDE STANDARD CUT WASHER BETWEEN NUT & BPS PLATE.

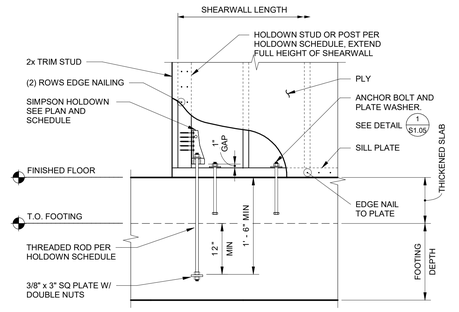

HDU HOLDOWN

HOLDOWN SCHEDULE - SIMPSON STRONG-TIE WOOD - DSA

TYPE	DESCRIPTION	No. OF SDS 1/4x SCREW TO POST	HS THREADED ROD DIAMETER	END POST	SERVICE LOAD CAPACITY - DSA
1	HDU2-SDS2.5	6	5/8"	4x6 MIN.	2,460#
2	HDU5-SDS2.5	14	5/8"	4x6 MIN.	4,516#
3	HDU8-SDS2.5	20	7/8"	6x	6,296#
4	HDU11-SDS2.5	30	1"	6x8 MIN	8,940#

HOLDOWN AT FOOTING

3/4" = 1'-0"

2 S1.05

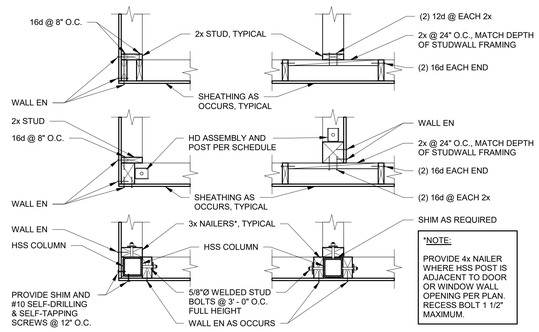

FRAMING DETAIL

NO SCALE

3 S1.05

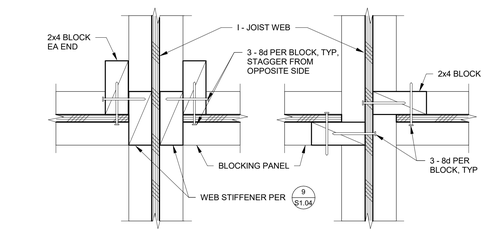

ALTERNATE BLOCKING DETAIL AT ODD SPACES WHERE FACTORY INSTALLED END BLOCKS ARE NOT PROVIDED

ALTERNATE I - JOIST BLOCKING

NO SCALE

4 S1.05

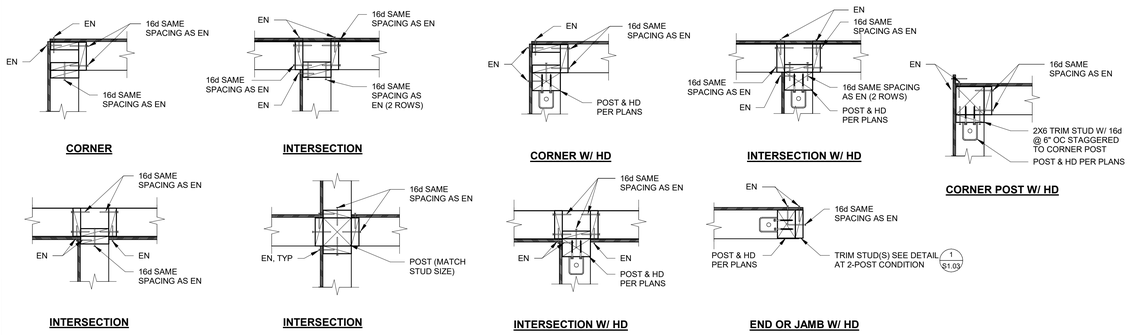

PLAN VIEW OF SHEARWALL DETAILS

1" = 1'-0"

5 S1.05

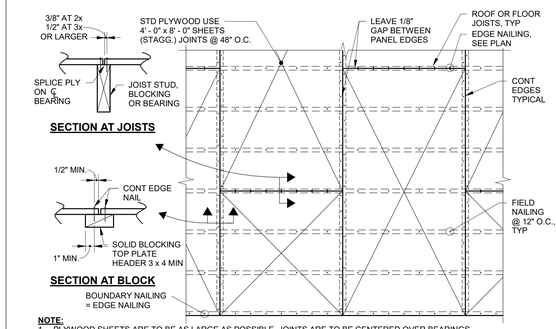

NOTE:

1. PLYWOOD SHEETS ARE TO BE AS LARGE AS POSSIBLE. JOINTS ARE TO BE CENTERED OVER BEARINGS.
2. SHEET SIZE LESS THAN 24" IN DIMENSION NOT PERMITTED. STAGGER ALL END JOINTS OF SHEATHING. OUTSIDE FACE GRAINS TO RUN PERPENDICULAR TO BEARING. BLOCKING ALL JOINTS AND EDGES.

PLYWOOD DIAPHRAGM FRAMING

1/2" = 1'-0"

6 S1.05

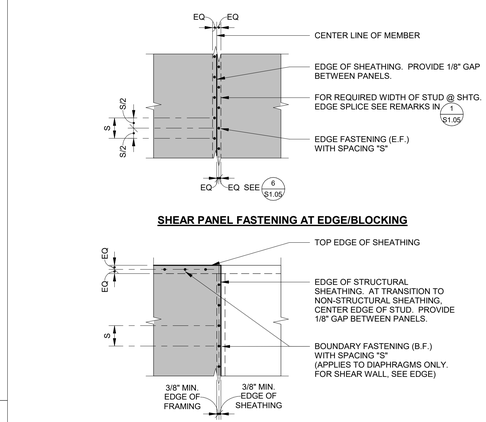

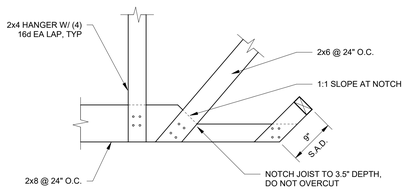

CEILING FRAMING DETAIL

1" = 1'-0"

7 S1.05

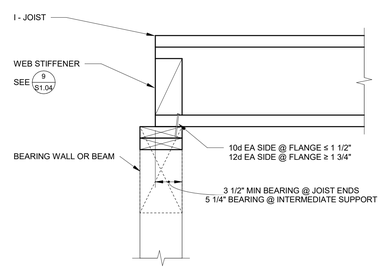

I - JOIST BEARING

NO SCALE

8 S1.05

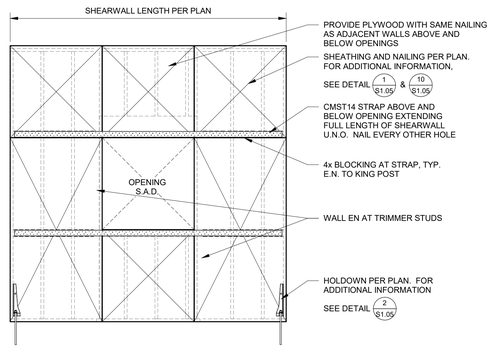

STRAPPED SHEARWALL ELEVATION

NO SCALE

9 S1.05

PLY EDGE/BOUNDARY FASTENING

1" = 1'-0"

10 S1.05

DSA STAMP

IDENTIFICATION STAMP
DIV. OF THE STATE ARCHITECT
APP: 02-123307 INC:
REVIEWED FOR
SS ☑ FLS ☑ ACS ☑
DATE: 10/15/2025

CORNERSTONE structural engineering group
986 W. Alluvial Avenue, Suite 201
Fresno, California 93711
559.320.3200
fax 559.320.3201

Owner:

WASHINGTON UNIFIED SCHOOL DISTRICT

WASHINGTON UNIFIED SCHOOL DISTRICT

6041 SOUTH ELM AVE
FRESNO, CA 93706

Project Name:

STUDENT SERVICES

Project Address:

WASHINGTON UNION HIGH SCHOOL

6041 SOUTH ELM AVE,
FRESNO, CA 93706

integrated designs
by SOMAM, Inc.

ARCHITECTURE
ENGINEERING
INTERIOR DESIGN

6011 N. FRESNO STREET, SUITE 130
FRESNO CALIFORNIA 93710
P:(559) 436-0881 F:(559) 436-0887
E: design@somam.com
integrateddesigns.com

Ownership of Documents

This document, the ideas and designs incorporated herein, as an instrument of Professional Service is the property of Integrated Designs by SOMAM Inc. and is not to be used, in whole or in part for any other project without written authorization.

© COPYRIGHT 2022

Stamp:

REGISTERED PROFESSIONAL ENGINEER JUSTIN G. LEE M 29603 EXP. 3/31/27 STRUCTURAL STATE OF CALIFORNIA

Sheet Title:

TYPICAL DETAILS No. 5

Job No.:

5613

Sheet No.:

S1.05

Release: Date:

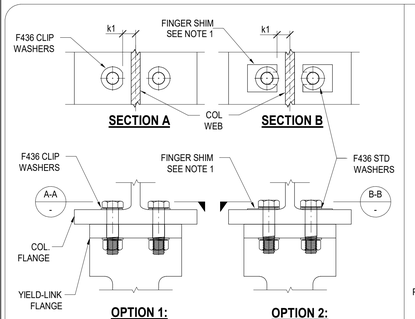

NOTE:
1. FINGER SHIM SHALL BE STRUCTURAL GRADE STEEL MATERIAL. TRIM TO FIT AS REQUIRED.
2. K1 VALUE FOR STEEL SHAPE VARIES. BOLT WASHER/SHIM SHALL BEAR FLAT ON COL. FLANGE.
3. SEE RCSC SPECIFICATION ON USE OF WASHERS ON SLOPING SURFACES.

BOLT BEARING NEAR COLUMN WEB 17

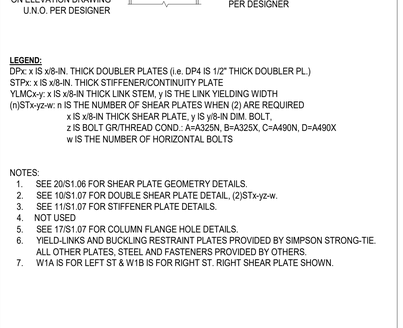

LEGEND:

DPx: x IS x/8-IN. THICK DOUBLER PLATES (i.e. DP4 IS 1/2" THICK DOUBLER PL.)
STPx: x IS x/8-IN. THICK STIFFENER/CONTINUITY PLATE
YLMCx-y: x IS x/8-IN THICK LINK STEM, y IS THE LINK YIELDING WIDTH
(n)STx-yz-w: n IS THE NUMBER OF SHEAR PLATES WHEN (2) ARE REQUIRED
x IS x/8-IN THICK SHEAR PLATE, y IS y/8-IN DIM. BOLT,
z IS BOLT GR/THREAD COND.: A=A325N, B=A325X, C=A490N, D=A490X
w IS THE NUMBER OF HORIZONTAL BOLTS

NOTES:
1. SEE 20/S1.06 FOR SHEAR PLATE GEOMETRY DETAILS.
2. SEE 10/S1.07 FOR DOUBLE SHEAR PLATE DETAIL, (2)STx-yz-w.
3. SEE 11/S1.07 FOR STIFFENER PLATE DETAILS.
4. NOT USED
5. SEE 17/S1.07 FOR COLUMN FLANGE HOLE DETAILS.
6. YIELD-LINKS AND BUCKLING RESTRAINT PLATES PROVIDED BY SIMPSON STRONG-TIE. ALL OTHER PLATES, STEEL AND FASTENERS PROVIDED BY OTHERS.
7. W1A IS FOR LEFT ST & W1B IS FOR RIGHT ST. RIGHT SHEAR PLATE SHOWN.

YIELD-LINK CONNECTION LEGEND 19

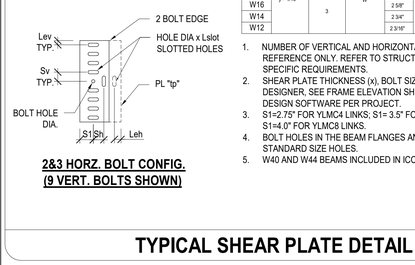

VERT. BOLT CONFIG. (1 HORZ. BOLT SHOWN)

2&3 HORZ. BOLT CONFIG. (9 VERT. BOLTS SHOWN)

BEAM SIZE	HOLE DIA.	No. VERT BOLTS	No. HORZ BOLTS	Sv	Sh	Lev	Leh	Lslot	tp
W44				3 1/8"	3 1/8"	1 1/2"			
W40				3 1/8"	3 1/8"	1 1/2"			
W36	y + 1/16"	9	W	2 7/8"			1 3/4"	2 7/8"	X
W33				2 1/2"	2 3/4"	1 1/4"			
W30				2 3/4"				2 3/8"	
W27		7		2 5/16"					
W24		5		2 3/4"	2 3/4"	1 1/8"	1 3/4"	1 7/8"	X
W21				2 3/8"					
W18	y + 1/16"	3	W	3 1/4"				1 1/2"	
W16				2 5/8"					
W14				2 3/4"					
W12				2 3/16"					

1. NUMBER OF VERTICAL AND HORIZONTAL BOLTS SHOWN FOR REFERENCE ONLY. REFER TO STRUCTURAL DRAWINGS FOR PROJECT SPECIFIC REQUIREMENTS.
2. SHEAR PLATE THICKNESS (x), BOLT SIZE (y) AND QUANTITY (w) PER DESIGNER, SEE FRAME ELEVATION SHEETS EXPORTED USING YLMC DESIGN SOFTWARE PER PROJECT.
3. S1=2.75" FOR YLMC4 LINKS; S1= 3.5" FOR YLMC6 LINKS; S1=4.0" FOR YLMC8 LINKS.
4. BOLT HOLES IN THE BEAM FLANGES AND BEAM WEB SHALL BE STANDARD SIZE HOLES.
5. W40 AND W44 BEAMS INCLUDED IN ICC-ES ESR-2802.

TYPICAL SHEAR PLATE DETAIL 20

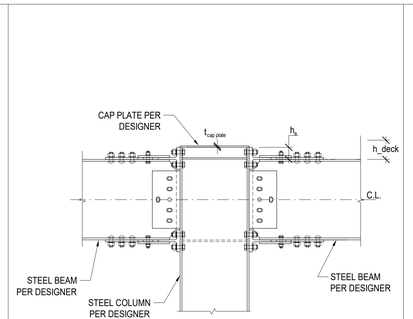

NOTE:
1. SEE 5/- OR 9/- FOR INFO NOT NOTED.
2. SEE 8/- FOR h_s VALUES FOR DIFFERENT LINK SIZES.

ROOF CONN. W/BEAMS ON EA. SIDE 13

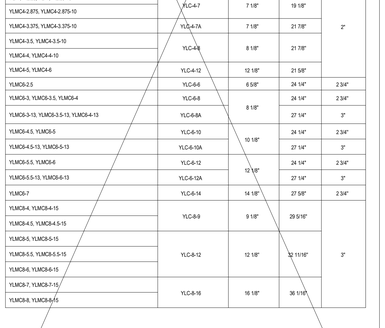

YIELD-LINK® SKU	YIELD-LINK® COVER PLATE ID	DIMENSIONS WIDTH (W)	LENGTH (L)	HEIGHT (H)	
YLMC4-2, YLMC4-2.5, YLMC4-3	YLC4-6	6 5/8"	16 1/8"		
YLMC4-2.25, YLMC4-2.25-10	YLC4-7	7 1/8"	19 1/8"		
YLMC4-2.875, YLMC4-2.875-10					
YLMC4-3.375, YLMC4-3.375-10	YLC4-7A	7 1/8"	21 7/8"	2"	
YLMC4-3.5, YLMC4-3.5-10	YLC4-8	8 1/8"	21 7/8"		
YLMC4-4, YLMC4-4-10					
YLMC4-4.5, YLMC4-4-10	YLC4-12	12 1/8"	21 5/8"		
YLMC6-2.5	YLC-6-6	6 5/8"	24 1/4"	2 3/4"	
YLMC6-3, YLMC6-3.5, YLMC6-4	YLC-6-8	8 1/8"	24 1/4"	2 3/4"	
YLMC6-3-13, YLMC6-3.5-13, YLMC6-4-13	YLC-6-8A		27 1/4"	3"	
YLMC6-4.5, YLMC6-5	YLC-6-10	10 1/8"	24 1/4"	2 3/4"	
YLMC6-4.5-13, YLMC6-5-13	YLC-6-10A		27 1/4"	3"	
YLMC6-5.5, YLMC6-6	YLC-6-12	12 1/8"	24 1/4"	2 3/4"	
YLMC6-5.5-13, YLMC6-6-13	YLC-6-12A		27 1/4"	3"	
YLMC6-7	YLC-6-14	14 1/8"	27 5/8"	2 3/4"	
YLMC8-4, YLMC8-4-15	YLC-8-9	9 1/8"	29 5/16"		
YLMC8-4.5, YLMC8-4.5-15					
YLMC8-5, YLMC8-5-15	YLC-8-12	12 1/8"	32 11/16"	3"	
YLMC8-5.5, YLMC8-5.5-15					
YLMC8-6, YLMC8-6-15					
YLMC8-7, YLMC8-7-15	YLC-8-16	16 1/8"	36 1/16"		
YLMC8-8, YLMC8-8-15					

NOTES:
1. THICKNESS 54 MIL (16GA), ASTM A653 GRADE 33 STEEL.
2. FINISH: GALVANIZED/ZMAX COATING.
3. ALTERNATE CONCRETE COVER BY OTHERS, SEE DETAIL 20/YLMC2.

YIELD-LINK CONCRETE COVER 15

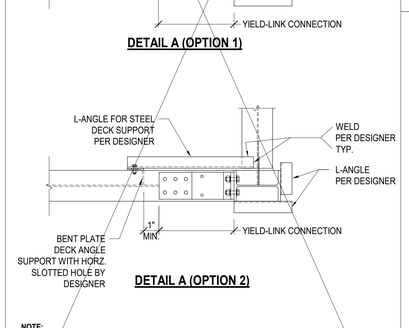

DETAIL A (OPTION 1)

DETAIL A (OPTION 2)

NOTE:
1. SEE STRUCTURAL DRAWINGS PER PROJECT BY DESIGNER FOR OTHER SUPPORT OPTIONS.

STEEL DECK SUPPORT AT CONN. 11

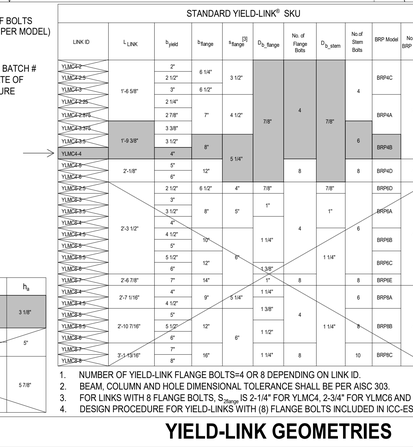

TYPE	t_{flange}	t_{stem}	h_{flange}	S_{flange}	$S_{stiffener}$	h_s
YLMC4-XX	7/8"					
YLMC4-2X-Y0, YLMC4-5, YLMC6-6	13/16"	1/2"	5 3/4"	3 1/4"	3 1/8"	
YLMC6(Y),YLMC8-13	1 1/4"	3/4"	9 1/4"	5 3/4"		5"
YLMC6-7	1 7/16"			6 1/4"		
YLMC8-XX(Y),YLMC8-XX-15	1 13/16"					
YLMC8-7, YLMC8-8, YLMC8-7-15, YLMC8-8-15	1 3/4"	1"	10 3/4"	7"		5 7/8"

NOTES:
1. NUMBER OF YIELD-LINK FLANGE BOLTS=4 OR 8 DEPENDING ON LINK ID.
2. BEAM, COLUMN AND HOLE DIMENSIONAL TOLERANCE SHALL BE PER AISC 303.
3. FOR LINKS WITH 8 FLANGE BOLTS, S_{flange} IS 2-1/4" FOR YLMC4, 2-3/4" FOR YLMC6 AND 3-3/8" FOR YLMC8.
4. DESIGN PROCEDURE FOR YIELD-LINKS WITH (8) FLANGE BOLTS INCLUDED IN ICC-ES ESR-2802.

YIELD-LINK GEOMETRIES 8

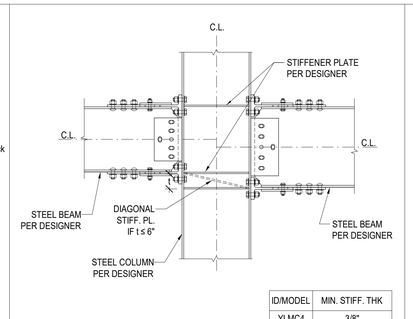

ID/MODEL	MIN. STIFF. THK
YLMC4	3/8"
YLMC6	1/2"
YLMC8	5/8"

NOTE:
1. SEE 5/- FOR INFO NOT NOTED.
2. FOR STIFFENER PLATE THICKNESS, SEE FRAME ELEVATION DRAWINGS EXPORTED BY YLMC DESIGN SOFTWARE.

2 SIDED CONNECTION 9

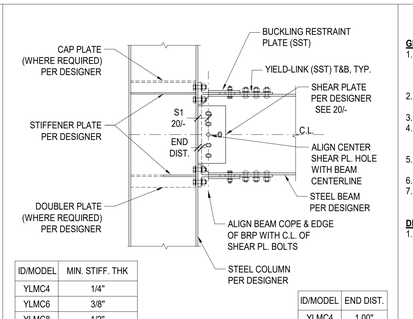

ID/MODEL	MIN. STIFF. THK
YLMC4	1/4"
YLMC6	3/8"
YLMC8	1/2"

ID/MODEL	END DIST.
YLMC4	1.00"
YLMC6	1.75"
YLMC8	2.25"

NOTE:
1. SEE 6/- FOR BOLTING REQUIREMENTS.
2. SEE 7/- FOR PROTECTED ZONE AT YIELD-LINK CONNECTION.
3. FOR STIFFENER PLATE THICKNESS, SEE FRAME ELEVATION DRAWINGS EXPORTED BY YLMC DESIGN SOFTWARE.

1 SIDED CONNECTION 5

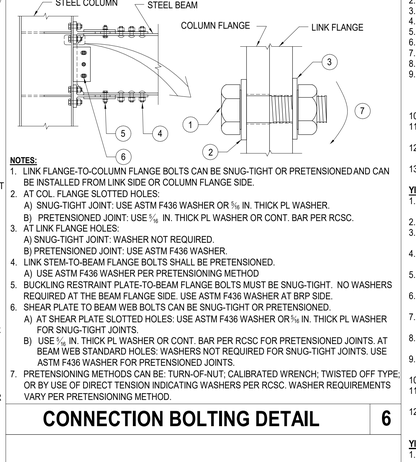

NOTES:
1. LINK FLANGE-TO-COLUMN FLANGE BOLTS CAN BE SNUG-TIGHT OR PRETENSIONED AND CAN BE INSTALLED FROM LINK SIDE OR COLUMN FLANGE SIDE.
2. AT COL. FLANGE SLOTTED HOLES:
   A) SNUG-TIGHT JOINT: USE ASTM F436 WASHER OR 1/8 IN. THICK PL WASHER.
   B) PRETENSIONED JOINT: USE 1/8 IN. THICK PL WASHER OR CONT. BAR PER RCSC.
3. AT LINK FLANGE HOLES:
   A) SNUG-TIGHT JOINT: WASHER NOT REQUIRED.
   B) PRETENSIONED JOINT: USE ASTM F436 WASHER.
4. LINK STEM-TO-BEAM FLANGE BOLTS SHALL BE PRETENSIONED.
   A) USE ASTM F436 WASHER PER PRETENSIONING METHOD
5. BUCKLING RESTRAINT PLATE-TO-BEAM FLANGE BOLTS MUST BE SNUG-TIGHT. NO WASHERS REQUIRED AT THE BEAM FLANGE SIDE. USE ASTM F436 WASHER AT BRP SIDE.
6. SHEAR PLATE TO BEAM WEB BOLTS CAN BE SNUG-TIGHT OR PRETENSIONED.
   A) AT SHEAR PLATE SLOTTED HOLES: USE ASTM F436 WASHER OR 1/8 IN. THICK PL WASHER FOR SNUG-TIGHT JOINTS.
   B) USE 1/4 IN. THICK PL WASHER OR CONT. BAR PER RCSC FOR PRETENSIONED JOINTS. AT BEAM WEB STANDARD HOLES: WASHERS NOT REQUIRED FOR SNUG-TIGHT JOINTS. USE ASTM F436 WASHER FOR PRETENSIONED JOINTS.
7. PRETENSIONING METHODS CAN BE: TURN-OF-NUT; CALIBRATED WRENCH; TWISTED OFF TYPE; OR BY USE OF DIRECT TENSION INDICATING WASHERS PER RCSC. WASHER REQUIREMENTS VARY PER PRETENSIONING METHOD.

CONNECTION BOLTING DETAIL 6

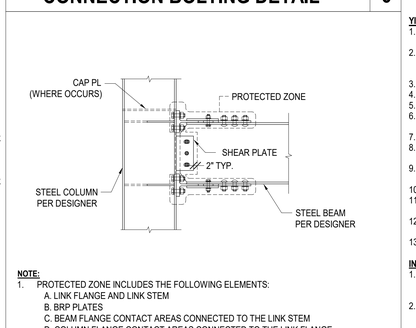

NOTE:
1. PROTECTED ZONE INCLUDES THE FOLLOWING ELEMENTS:
   A. LINK FLANGE AND LINK STEM
   B. BRP PLATES
   C. BEAM FLANGE CONTACT AREAS CONNECTED TO THE LINK STEM
   D. COLUMN FLANGE CONTACT AREAS CONNECTED TO THE LINK FLANGE
   E. SHEAR PLATE AND BEAM WEB AT 2" AROUND SHEAR PLATE
   F. LINK STEM, LINK FLANGE, BRP AND SHEAR PLATE BOLTS.
2. PROTECTED ZONE SHALL BE MARKED BY USING ANY NON-DESTRUCTIVE METHODS PRIOR TO AND AFTER APPLICATION OF SPRAYED ON FIRE-RESISTING MATERIAL.
3. NO ATTACHMENT SHALL BE MADE WITHIN THE PROTECTED ZONE.

PROTECTED ZONE 7

STANDARD YIELD-LINK® SKU										EXTENDED YIELD-LINK® SKU									
LINK ID	L_{link}	b_{yield}	b_{flange}	t_{flange} [2]	D_{b_flange}	No. of Flange Bolts	D_{b_stem}	No.of Stem Bolts	BRP Model	No. of BRP Bolts	LINK ID	L_{link}	b_{yield}	b_{flange}	t_{flange} [2]	D_{b_flange}	No. of Flange Bolts	D_{b_stem}	No.of Stem Bolts	BRP Model	No. of BRP Bolts
YLMC4-2	1'-6 5/8"	2"	6 1/4"	3 1/2"	7/8"	4	7/8"	4	BRP4C	2	-	-	-	-	-	-	-	-	-	-	-
YLMC4-2.5		2 1/2"									-	-	-	-	-	-	-	-	-	-	-
YLMC4-3		3"	6 1/2"								-	-	-	-	-	-	-	-	-	-	-
YLMC4-2.25		2 1/4"									-	-	-	-	-	-	-	-	-	-	-
YLMC4-2.875		2 7/8"	7"	4 1/2"					BRP4A		YLMC4-2.25-10	1'-9 9/16"	2 1/4"	7"	4 1/2"	7/8"	4	7/8"	4	BRP4A-10	4
YLMC4-3.375		3 3/8"									YLMC4-2.875-10		2 7/8"								
YLMC4-3.5	1'-9 3/8"	3 1/2"	8"	5 1/4"				6	BRP4B		YLMC4-3.375-10	2'-5/16"	3 3/8"	8"	5 1/4"				6	BRP4B-10	
YLMC4-4		4"									YLMC4-3.5-10		3 1/2"								
YLMC6-2	2'-1/8"	2"	12"		7/8"	8	7/8"	8	BRP6D	4	YLMC4-4-10		4"								
YLMC6-2.5		2 1/2"	6 1/2"	4"					BRP6D		-	-	-	-	-	-	-	-	-	-	-
YLMC6-3		3"									-	-	-	-	-	-	-	-	-	-	-
YLMC6-3.5	Z-3 1/2"	3 1/2"	8"	5"	1"	4	1"	8	BRP6A	4	YLMC6-3-13	Z-6 1/2"	3"	8"	5"	1"	4	1"	6	BRP6A-13	4
YLMC6-4		4"									YLMC6-3.5-13		3 1/2"								
YLMC6-4.5		4 1/2"	10"		1 1/4"		1 1/4"		BRP6B		YLMC6-4-13		4"	10"	6"	1 1/4"		1 1/4"		BRP6B-13	
YLMC6-5		5"									YLMC4-4.5-13		4 1/2"								
YLMC6-5.5		5 1/2"	12"	6"	1 3/8"		1 3/8"		BRP6C		YLMC6-5-13		5"	12"		1 3/8"		1 3/8"		BRP6C-13	
YLMC6-6		6"									YLMC6-5.5-13		5 1/2"								
YLMC6-7	Z-6 7/8"	7"	14"		1"	8		8	BRP6E		YLMC6-6-13		6"								
YLMC8-2		2"									-	-	-	-	-	-	-	-	-	-	-
YLMC8-2.5	Z-7 1/16"	2 1/2"	9"	5 1/4"	1 1/4"	6	1 1/4"	8	BRP8A	4	YLMC8-4-15	Z-9 1/16"	4"	9"	5 1/4"	1 1/4"	6	1 1/4"	8	BRP8A-15	6
YLMC8-3		3"									YLMC8-4.5-15		4 1/2"			1 3/8"					
YLMC8-3.5		3 1/2"									YLMC8-5-15		5"				4				
YLMC8-4		4"									YLMC8-5.5-15	3'-7/16"	5 1/2"	12"		1 7/16"		1 1/4"	8	BRP8B-15	
YLMC8-4.5	Z-10 7/16"	4 1/2"	12"	6"	1 1/2"	8	1 1/4"	8	BRP8B	4	YLMC8-6-15		6"								
YLMC8-5		5"									YLMC7-15		7"	16"		1 1/4"	8		10	BRP8C-15	
YLMC8-5.5		5 1/2"									YLMC8-8-15	3'-3 13/16"	8"								
YLMC8-6		6"																			
YLMC8-7	Z-13 15/16"	7"	16"		1 1/4"	8		10	BRP8C												
YLMC8-8		8"																			

1. NUMBER OF YIELD-LINK FLANGE BOLTS=4 OR 8 DEPENDING ON LINK ID.
2. BEAM, COLUMN AND HOLE DIMENSIONAL TOLERANCE SHALL BE PER AISC 303.
3. FOR LINKS WITH 8 FLANGE BOLTS, S_{flange} IS 2-1/4" FOR YLMC4, 2-3/4" FOR YLMC6 AND 3-3/8" FOR YLMC8.
4. DESIGN PROCEDURE FOR YIELD-LINKS WITH (8) FLANGE BOLTS INCLUDED IN ICC-ES ESR-2802.

YIELD-LINK GEOMETRIES 8

GENERAL NOTES:
1. SIMPSON STRONG-TIE YIELD-LINK® MOMENT CONNECTION IS PROTECTED UNDER ONE OR MORE OF THE FOLLOWING U.S. PATENTS AND APPLICATIONS: U.S. PATENT NO. 8,001,734 B2, U.S. PATENT NO. 8,375,652 B2, AND U.S. PATENT PUBLICATION NO. 2015/0159362, AND MUST BE SUPPLIED OR LICENSED THROUGH SIMPSON STRONG-TIE. YIELD-LINK MOMENT CONNECTION IS MANUFACTURED AND PROTECTED UNDER U.S. PATENT NO. 10,669,718 B2 AND CANNOT BE DUPLICATED OR FABRICATED WITHOUT EXPRESSED, WRITTEN PERMISSION FROM SIMPSON STRONG-TIE CO., INC.
2. YIELD-LINK MOMENT CONNECTION IS MANUFACTURED AND TRADEMARKED BY "SIMPSON STRONG-TIE COMPANY INC." HOME OFFICE: 5956 W. LAS POSITAS BLVD., PLEASANTON, CA 94588 TEL: (800) 999-5099, FAX: (925) 847-1597. "SIMPSON STRONG-TIE COMPANY INC." IS AN ISO 9001 REGISTERED COMPANY.
3. SIMPSON STRONG-TIE® COMPANY, INC. RESERVES THE RIGHT TO CHANGE SPECIFICATIONS, DESIGNS, AND MODELS WITHOUT NOTICE OR LIABILITY FOR SUCH CHANGES.
4. USE OF A SIMPSON STRONG-TIE PRODUCT DOES NOT IMPLY THAT SIMPSON STRONG-TIE ENDORSES ANY PROJECT, STRUCTURE OR USE. NO LICENSE IS GRANTED WITH RESPECT TO ANY SIMPSON STRONG-TIE TRADEMARK OR OTHER INTELLECTUAL PROPERTY RIGHTS. WRITTEN PERMISSION MUST BE OBTAINED PRIOR TO USING ANY SIMPSON STRONG-TIE TRADEMARKS OR PROPRIETARY DOCUMENTS AND MATERIALS.
5. SIMPSON STRONG-TIE IS NOT AFFILIATED WITH, AND DOES NOT SPONSOR OR ENDORSE. THE ENGINEER OF RECORD (EOR), FABRICATOR, INSTALLER OR USERS OF THIS DRAWING, NOR DOES SIMPSON STRONG-TIE HAVE ANY JOINT VENTURE, PARTNERSHIP, AGENCY, EMPLOYMENT OR FIDUCIARY RELATIONSHIP WITH SUCH PERSONS.
6. INSTALLATION DETAILS PROVIDED ARE FOR REFERENCE ONLY. ENGINEER OF RECORD (EOR) CAN PROVIDE ALTERNATE DETAILING.
7. INSTALLATION OF PRODUCT SHALL BE DONE IN CONFORMANCE WITH THESE DRAWINGS AND ICC-ES ESR-2802 AND AISC 358. THE PERFORMANCE OF MODIFIED PRODUCTS OR ALTERED INSTALLATION PROCEDURES ARE THE RESPONSIBILITY OF THE EOR AND CONTRACTOR.

DESIGN NOTES:
1. DESIGN FOR THE YIELD-LINK SPECIAL MOMENT CONNECTION SHALL BE IN ACCORDANCE WITH THE FOLLOWING:
   - 2022 CALIFORNIA BUILDING CODE (CBC)
   - AISC SPECIFICATION FOR STRUCTURAL STEEL BUILDINGS (ANSI/AISC 360-16)
   - AISC SEISMIC PROVISIONS (ANSI/AISC 341-16)
   - PREQUALIFIED CONNECTIONS FOR SPECIAL AND INTERMEDIATE STEEL MOMENT FRAMES FOR SEISMIC APPLICATIONS (ANSI/AISC 358-16)
   - ICC-ES ESR-2802
   - 2020 RCSC SPECIFICATION FOR STRUCTURAL JOINTS USING HIGH-STRENGTH BOLTS.
   - STRUCTURAL WELDING CODE-STEEL (AWS D1.1-2015)
   - STRUCTURAL WELDING CODE-SEISMIC SUPPLEMENT (AWS D1.8-2016)
   - AISC CODE OF STANDARD PRACTICE FOR STEEL BUILDINGS AND BRIDGES (ANSI/AISC 360-16)
2. USE OF THIS PRODUCT IS SUBJECT TO THE APPROVAL OF THE LOCAL BUILDING DEPARTMENT.
3. THIS PRODUCT IS PART OF THE OVERALL LATERAL FORCE RESISTING SYSTEM OF THE STRUCTURE. DESIGN OF THE BUILDING'S LATERAL FORCE RESISTING SYSTEM, INCLUDING THE LOAD PATH TO TRANSFER LATERAL FORCES FROM THE STRUCTURE TO THE GROUND, IS THE RESPONSIBILITY OF THE ENGINEER OF RECORD (EOR).
4. THE EOR MUST SPECIFY THE REQUIRED COMPONENTS OF THE COMPLETE LOAD TRANSFER PATH INCLUDING BUT NOT LIMITED TO DIAPHRAGMS, SHEAR TRANSFER, CHORDS AND COLLECTORS AND FOUNDATIONS.
5. ALL CONNECTED MEMBERS AND RELATED ELEMENTS SHALL BE DESIGNED BY THE EOR.
6. THE TERM DESIGNER REFERS TO A LICENSED/CERTIFIED BUILDING DESIGN PROFESSIONAL OR A LICENSED PROFESSIONAL ENGINEER.

MATERIAL:
1. YIELD-LINKS: ASTM A992 (PROVIDED BY SIMPSON STRONG-TIE).
2. BRP: ASTM A572 GR. 50 (PROVIDED BY SIMPSON STRONG-TIE).
3. BEAMS AND COLUMNS MUST BE HOT-ROLLED W SECTIONS (ASTM A992) OR WELDED BUILT-UP I-SHAPE MEMBERS THAT MEET AISC 360 SECTION A3 AND AISC 358 SECTION 2.3.2.
4. SHEAR PLATE, STIFFENER PLATE AND DOUBLER PLATE: ASTM A572 GR. 50 (U.N.O.).
5. LINK STEM-TO-BEAM FLANGE BOLTS SHALL BE ASTM F3125 GRADE A490 OR F2280 (X OR N) (PRETENSIONED).
6. LINK FLANGE-TO-COLUMN FLANGE BOLTS SHALL BE ASTM F3125 GRADE A325-N (SNUG-TIGHT) OR F1852-N (PRETENSIONED).
7. SHEAR PLATE-TO-BEAM WEB BOLTS SHALL BE ASTM F3125 GRADE A325, A490, F1852 OR F2280 (X OR N TYPE PER DESIGN).
8. BRP-TO-BEAM FLANGE BOLTS SHALL BE ASTM F3125 GRADE A325-N (A325-X FOR YLMC8-6, YLMC8-7, YLMC8-8, YLMC8-6-15, YLMC8-7-15 & YLMC8-8-15).
9. COMPRESSIBLE EXPANSION JOINT MATERIAL: SPECIFIED COMPRESSIVE STRENGTH MUST BE NO LESS THAN 10 PSI UNLESS OTHERWISE INDICATED ELSEWHERE FOR THE PROJECT. SPECIFIED COMPRESSIVE STRENGTH MUST BE NO MORE THAN 100 PSI. RECOMMENDED MATERIALS AT NON-FIRE RATED ASSEMBLIES ARE RIGID FOAM TYPE EXPANDED POLYSTYRENE (EPS) OR TYPE EXTRUDED POLYSTYRENE (XPS). RECOMMENDED MATERIALS AT FIRE-RATED ASSEMBLIES ARE SPRAYED FIRE-RESISTIVE MATERIALS (SPRAY-APPLIED FIREPROOFING) WITH FIRE RESISTANCE DESIGN PARAMETERS AS REQUIRED FOR THE PROJECT.
10. UNLESS NOTED OTHERWISE BY THE ENGINEER OF RECORD, ALL WELD FILLER METAL SHALL HAVE CLASSIFICATION STRENGTH (F_{EXX}) OF 70 KSI.
11. FOR NON-DEMAND CRITICAL WELDS (BEAM TO COLUMN SHEAR PLATE AND COLUMN STIFFENER/CONTINUITY PLATE), WELD FILLER METAL SHALL MEET THE AWS D1.1 AND D1.8 MINIMUM CHARPY V-NOTCH REQUIREMENT OF 20 FT*LBS AT 0°(F).
12. FOR DEMAND-CRITICAL WELDS, COLUMN SPLICES, DOUBLER PLATES (CJP WELDS) AND BASE PLATES, WELD FILLER METAL SHALL MEET THE AWS D1.1 AND D1.8 MINIMUM CHARPY V-NOTCH REQUIREMENT OF 20 FT*LBS AT 0°(F) AND 40 FT*LBS AT 70°(F).
13. IN ADDITION TO THE MINIMUM CHARPY V-NOTCH REQUIREMENT, ALL FILLER METAL SHALL MEET THE DIFFUSIBLE HYDROGEN LEVEL AS NOTED IN SECTION 6.1.3 OF AWS D1.8.

YIELD-LINK MOMENT CONNECTION WELDING REQUIREMENTS:
1. ALL SHOP AND FIELD WELDING ON COMPONENTS (SHEAR PLATE, STIFFENER PLATE, DOUBLER PLATE [IF REQUIRED]) OF THE YIELD-LINK CONNECTION SHALL BE DONE BY PERSONNEL QUALIFIED PER AWS D1.1 SECTION 4 PART C, AWS D1.8 ANNEX D (AS REQUIRED), AND AS APPROVED BY AUTHORITIES HAVING JURISDICTION (AHJ).
2. ALL WELDERS SHALL HAVE EVIDENCE OF PASSING THE AWS D.1 STANDARD QUALIFICATION TESTING, AND SHALL BE CERTIFIED FOR THE WORK THEY ARE PERFORMING.
3. SPECIFIC WRITTEN WELDING PROCEDURE SPECIFICATIONS (WPS) FOR EVERY WELDING APPLICATION USED FOR THE YIELD-LINK CONNECTIONS IN THE PROJECT SHALL BE SUBMITTED TO THE EOR/ AHJ FOR REVIEW AND APPROVAL PRIOR TO START OF WORK. EACH WPS SHALL REFERENCE THE PREQUALIFIED WELDED JOINT DETAIL FROM SECTION 3 OF AWS D1.1.
4. IN LIEU OF ITEM 3, THE STEEL FABRICATOR MAY PROVIDE A PROCEDURE QUALIFICATION RECORD (PQR) FOR THE CONNECTION WELDS USED FOR THE PROJECT. THE PQR SHALL CONFORM TO THE REQUIREMENTS OF AWS D1.1 SECTION 4.
5. WPS (OR PQR) SHALL CONTAIN ALL THE ESSENTIAL VARIABLES USED IN THE WELDING PROCEDURE AND SHALL BE STAMPED/APPROVED BY AN AMERICAN WELDING SOCIETY (OR APPROVED EQUIVALENT) CERTIFIED WELDING INSPECTOR.
6. SUBMIT WELDER QUALIFICATION, WPS (OR PQR), AND FILLER METAL CERTIFICATION OF CONFORMANCE PROVIDED BY THE WIRE MANUFACTURER TO THE EOR AND AHJ FOR APPROVAL PRIOR TO FABRICATION.
7. STEEL BASE METAL ON WHICH WELD METAL IS TO BE DEPOSITED SHALL BE FREE OF DUST, MOISTURE, GREASE SLAG, MILL SCALE AND OTHER FOREIGN MATERIAL THAT WOULD PREVENT PROPER WELD DEPOSIT.
8. FOR SHEAR PLATE WELDS, FILLET WELD TERMINATION MAY EXTEND TO THE ENDS OF THE SHEAR PLATE OR MAYBE STOPPED SHORT AT EACH END OF THE SHEAR PLATE FOR A LENGTH THE SAME DIMENSION AS THE WELD SIZE. FILLET WELDS SHALL NOT BE WRAPPED AROUND THE TOP AND BOTTOM EDGES OF THE SHEAR PLATE.
9. FOR COLUMN STIFFENER/CONTINU

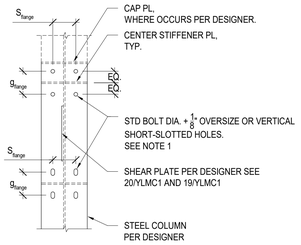

NOTE:
1. REFER TO RCSC SPECIFICATION FOR WASHER REQUIREMENTS ON SLOTTED HOLES AND OVERSIZED HOLES.
2. SEE DETAIL 17/YLMC1 FOR OPTIONS WHEN WASHERS ENCROACH INTO COLUMN K REGION.
3. SEE DETAIL 4/- FOR S_{flange} AND g_{flange} DIMENSIONS.

(4) COLUMN FLANGE HOLES — 17

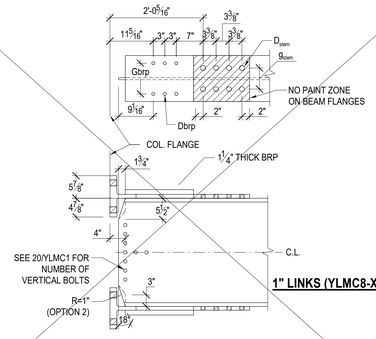

1" LINKS (YLMC8-XX-15)

NOTE:
1. YLMC8-XX-15 TO BE USED FOR W30 TO W44 BEAMS.
2. SEE 4/YLMC2 FOR g_{stem}, D_{brp} AND D_{stem}, TYP.

EXTENDED YLMC8 BEAM COPE/HOLE — 13

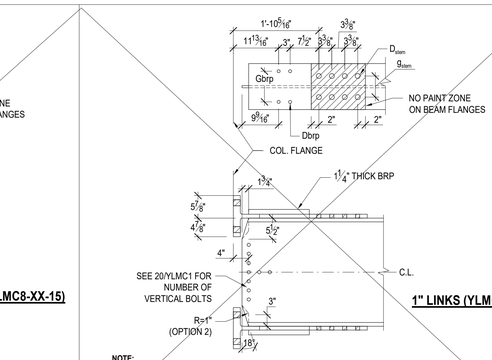

1" LINKS (YLMC8-XX)

NOTE:
1. YLMC8-XX TO BE USED FOR W24 TO W36 BEAMS.
2. SEE 4/YLMC2 FOR g_{stem}, D_{brp} AND D_{stem}, TYP.

YLMC8 BEAM COPE/HOLE DETAILS — 9

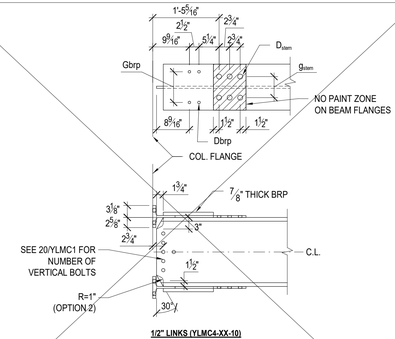

1/2" LINKS (YLMC4-XX-10)

NOTE:
1. YLMC4-XX-10 TO BE USED FOR W21 TO W27 BEAMS.
2. SEE 4/YLMC2 FOR g_{stem}, D_{brp} AND D_{stem}, TYP.

EXTENDED YLMC4 BEAM COPE/HOLE — 5

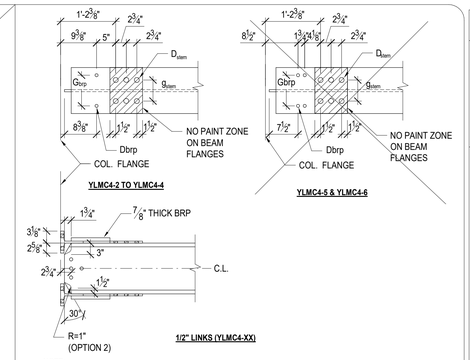

NOTE:
1. YLMC4-XX TO BE USED FOR W12 TO W18 BEAMS.
2. SEE 4/YLMC2 FOR g_{stem}, D_{brp} AND D_{stem}, TYP.

YLMC4 BEAM COPE/HOLE DETAILS — 1

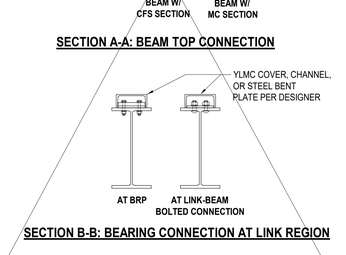

NOTE:
1. REFER TO RCSC FOR WASHER REQUIREMENTS ON SLOTTED HOLES AND OVERSIZED HOLES.
2. SEE DETAIL 17/YLMC1 FOR OPTIONS WHEN WASHERS ENCROACH INTO COLUMN K REGION.
3. SEE DETAIL 4/- FOR S_{flange}, $S_{sflange}$ AND g_{flange} DIMENSIONS.

(8) COLUMN FLANGE HOLES — 18

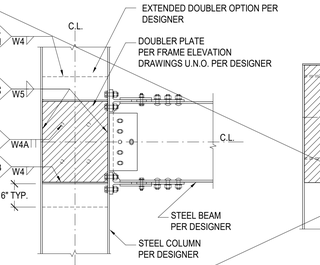

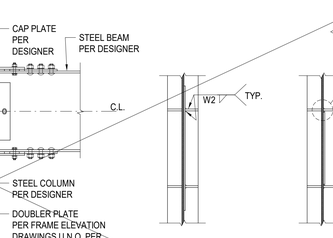

NOTE:
1. W1A & W1B FILLET WELDS SHALL BE MIN. 5/8 X SHEAR PLATE THICKNESS ON E.S. SEE PLATE AND WELD TABLE ON FRAME ELEVATION DRAWINGS U.N.O. BY DESIGNER.
2. SHEAR PLATE GEOMETRY: SEE 20/YLMC1 AND FRAME ELEVATION DRAWINGS.

SHEAR TAB DETAILS — 10

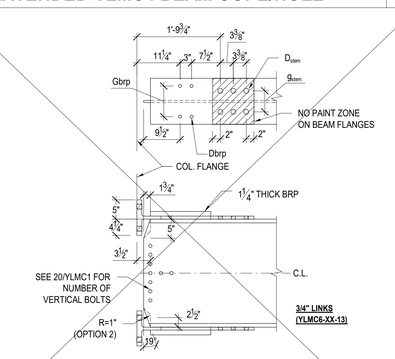

3/4" LINKS (YLMC6-XX-13)

NOTE:
1. YLMC6-XX-13 TO BE USED FOR W30 TO W36 BEAMS.
2. SEE 4/YLMC2 FOR g_{stem} , D_{brp} AND D_{stem}, TYP.

EXTENDED YLMC6 BEAM COPE/HOLE — 6

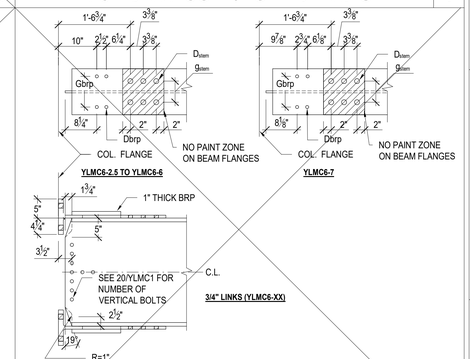

NOTE:
1. YLMC6-XX TO BE USED FOR W16 TO W27 BEAMS.
2. SEE 4/YLMC2 FOR g_{stem}, D_{brp} AND D_{stem}, TYP.

YLMC6 BEAM COPE/HOLE DETAILS — 2

SECTION A-A: BEAM TOP CONNECTION

SECTION B-B: BEARING CONNECTION AT LINK REGION

ALT. ATTACHMENTS AT SMF BM FLG — 20

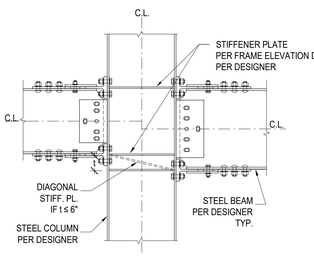

DIAGONAL STIFFENER PLATE

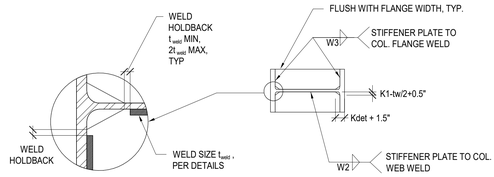

WELD PLACEMENT **A. FULL DEPTH STIFFENER PLATE**

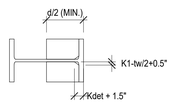

B. PARTIAL DEPTH STIFFENER PLATE

NOTE:
1. W2, W3 WELDS PER DRAWING ELEVATION WELD TABLE, SEE STRUCTURAL DRAWINGS AND 19/YLMC1.
2. FOR STIFFENER PLATE THICKNESS, SEE FRAME ELEVATION DRAWINGS U.N.O PER DESIGNER.

STIFFENER PLATE DETAILS — 11

NOTE:
1. W4, W5 WELDS PER DRAWING ELEVATION WELD TABLE, SEE STRUCTURAL DRAWINGS.
2. WHEN W5 IS A CJP WELD, WELD SHALL MEET D1.8 DC WELD REQUIREMENTS (SEE 19/YLMC1).

DOUBLER PLATE DETAILS — 12



STANDARD YLMC® SKU					EXTENDED YLMC® SKU					SHARED PARAMETERS										
LINK ID	t_{stem}	t_{flange}	L_{LINK}	n_BRP Bolts (Total)	LINK ID	t_{stem}	t_{flange}	L_{link}	n_BRP Bolts (Total)	b_{flange}	h_{flange}	s_{flange} [6] [7]	g_{flange}	n_FLANGE Bolts	D_{flange}	n_STEM Bolts	D_{stem}	D_{BRP}	G_{brp}	s_{stem}
YLMC4-2	1/2"	7/8"	1'-6 5/8"	2	-	-	-	-	-	6 1/4"	5 3/4"	3 1/2"	3 1/4"	4	15/16"	4	15/16"	11/16"	3 3/4"	2 3/4"
YLMC4-2.5										6 1/2"									4 1/4"	
YLMC4-3					YLMC4-2.25-10	1/2"	7/8"	1'-9 9/16"	4	7"		4 1/2"							4 3/4"	
YLMC4-2.875					YLMC4-2.875-10														4 7/8"	
YLMC4-3.375			1'-9 3/8"		YLMC4-3.375-10			2'-5/16"											5"	
YLMC4-3.5					YLMC4-3.5-10														5"	
YLMC4-4					YLMC4-4-10					8"		5 1/4"				6			5 5/8"	
YLMC4-5 [4]			2'-1/8"	4	-	-	-	-	-	12"				8		8			6 1/8"	
YLMC4-6 [4]																			8 5/8"	
YLMC6-2.5	3/4"	1-1/4"	2'-3 1/2"	4	-	-	-	-	-	6 1/2"	9 1/4"	4"	5 3/4"	4	15/16"	4	15/16"	13/16"	4 5/8"	3 3/8"
YLMC6-3					YLMC6-3-13	3/4"	1 1/4"	2'-6 1/2"	4											
YLMC6-3.5					YLMC6-3.5-13					8"		5"			1 1/16"	6	1 1/16"		5 3/4"	
YLMC6-4					YLMC6-4-13														6 1/4"	
YLMC6-4.5					YLMC6-4.5-13					10"		6"			1 5/16"	8	1 5/16"		6 3/4"	
YLMC6-5					YLMC6-5-13														7 1/4"	
YLMC6-5.5					YLMC6-5.5-13					12"					1 7/16"				7 3/4"	
YLMC6-6					YLMC6-6-13														8 1/4"	
YLMC6-7 [4, 5]		1-7/16"	2'-6 7/8"		-	-	-	-	-	14"			5 1/4"	8	1 1/16"	8	15/16"		9 7/8"	
YLMC8-4	1"	1-3/16"	2'-3 1/16"	4	YLMC8-4-15	1"	1 13/16"	2'-9 9/16"	6	9"	10 3/4"	5 1/4"	7"	4	1 5/16"	6	1 5/16"	13/16"	6 1/2"	3 3/8"
YLMC8-4.5					YLMC8-4.5-15										1 7/16"				7"	
YLMC8-5					YLMC8-5-15														7 1/2"	
YLMC8-5.5			Z-10 7/16"		YLMC8-5.5-15			3'-7/16"		12"		6"			1 9/16"	8	1 5/16"		8"	
YLMC8-6					YLMC8-6-15														8 1/2"	
YLMC8-7 [4, 5]		1-3/4"	3'-1 13/16"		YLMC8-7-15 [4, 5]		1 3/4"	3'-3 13/16"		16"				8	1 5/16"	10	15/16"		9 7/8"	
YLMC8-8 [4, 5]					YLMC8-8-15 [4, 5]														10 7/8"	

NOTES:
1. BEAM, COLUMN AND HOLE DIMENSIONAL TOLERANCE SHALL BE PER AISC 303.
2. HOLES ON BEAM FLANGES ARE PERMITTED TO BE STANDARD SIZES HOLES PER AISC 360-16 TABLE J3.3, ALL LINK HOLE SIZES SHOWN ARE 1/16" LARGER THAN BOLT DIAMETER.
3. SEE DETAILS 1/-, 2/-, 5/-, 6/-, 9/- AND 13/- FOR BEAM COPE AND BOLT HOLE DETAILS.
4. SEE DETAIL 17/- & 18/- FOR COLUMN FLANGE BOLT HOLE DETAILS.
5. CALIFORNIA OSHPD/HCAI & DSA DESIGN PROJECTS REQUIRE "YL" (YIELD-LINK CONFIGURATION WITH SEPARATE/NON-INTEGRATED SPACER PLATES). ALL YIELD-LINK SKUS ARE OFFERED IN OSHPD/HCAI & DSA COMPLIANT "YL" CONFIGURATIONS, UNLESS NOTED OTHERWISE.
   a. YIELD-LINK SKUS ARE CURRENTLY NOT PRE-QUALIFIED FOR OSHPD/HCAI & DSA DESIGN PROJECTS.
   b. YIELD-LINK SKUS ARE CURRENTLY NOT AVAILABLE IN YIELD-LINK CONFIGURATION WITH INTEGRATED SPACER PLATES.
6. FOR LINKS WITH 8 FLANGE BOLTS, S_{flange} IS 2-1/4" FOR YLMC4, 2-3/4" FOR YLMC6 AND 3-3/8" FOR YLMC8.
7. g_{stem} = 3-1/2" FOR YLMC4-2.25, YLMC4-2.25-10, YLMC4-2.875, YLMC4-2.875-10, YLMC4-3.375 & YLMC4-3.375-10; g_{stem} = s_{flange} FOR ALL OTHER LINKS.

YIELD-LINK DETAILED GEOMETRIES — 4

DSA STAMP

IDENTIFICATION STAMP
DIV. OF THE STATE ARCHITECT
APP: 02-123307 INC:
REVIEWED FOR
SS ☑ FLS ☑ ACS ☑
DATE: 10/15/2025

CORNERSTONE structural engineering group
986 W. Alluvial Avenue, Suite 201
Fresno, California 93711
559.320.3200
fax 559.320.3201

Owner:

WASHINGTON UNIFIED SCHOOL DISTRICT

6041 SOUTH ELM AVE
FRESNO, CA 93706

Project Name:

STUDENT SERVICES

Project Address:

WASHINGTON UNION HIGH SCHOOL

6041 SOUTH ELM AVE,
FRESNO, CA 93706

integrated designs
by SOMAM, Inc.

ARCHITECTURE
ENGINEERING
INTERIOR DESIGN

6011 N. FRESNO STREET, SUITE 130
FRESNO CALIFORNIA 93710
P:(559) 436-0881 F:(559) 436-0887
E: design@somam.com
integrateddesigns.com

Ownership of Documents
This document, the ideas and designs incorporated herein, as an instrument of Professional Service is the property of Integrated Designs by SOMAM Inc. and is not to be used, in whole or in part for any other project without written authorization.
© COPYRIGHT 2022

Stamp:

REGISTERED PROFESSIONAL ENGINEER
DUSTIN G. LEE
M. 39603
EXP. 3/31/27
STRUCTURAL
STATE OF CALIFORNIA

Sheet Title:

TYPICAL DETAILS No. 7

Job No.:

5613

Sheet No.:

S1.07

Release: Date:

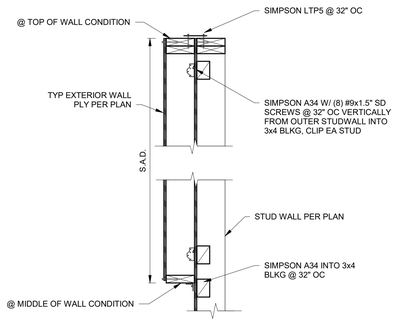

TYPICAL WALL BAND DETAIL

1" = 1'-0"

1 / S1.08

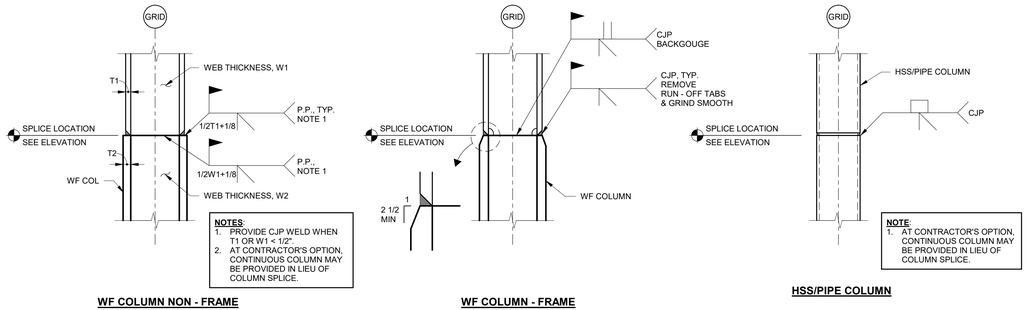

COLUMN SPLICE

NO SCALE

2 / S1.08

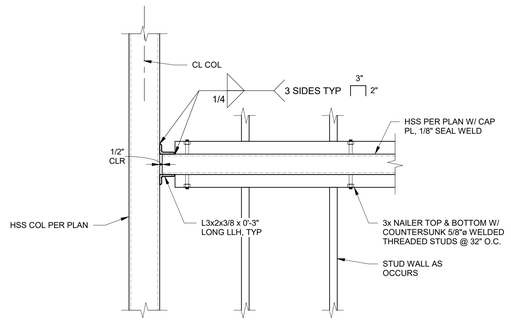

TYPICAL HSS PARAPET TOP PLATE TO MID HEIGHT OF HSS COLUMN CONNECTION

1" = 1'-0"

3 / S1.08

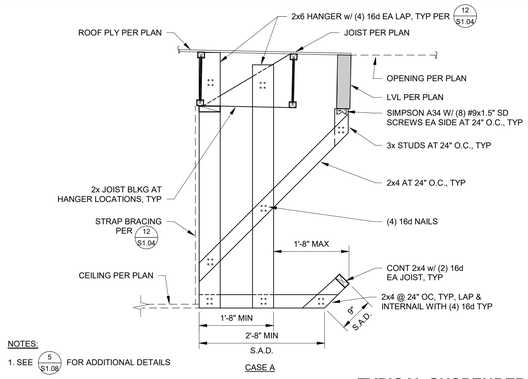

TYPICAL SUSPENDED SOFFIT DETAIL

3/4" = 1'-0"

4 / S1.08

SOFFIT FRAMING SCHEDULE					
	H	V	B		LEDGER
MAX. O.C. MEMBER SPACING	2'-0"	2'-0"	8'-0"		-
MAX ALLOWABLE AREA SUPPORT	16 FT²	18 FT²	64 FT²		-
	20 FT² (4)				
MAX LENGTH OF MEMBER	8'-0"	8'-0"	<6'-0"	6'-1" TO 14'-0" DBL 2x4 "T" SHAPE BRACE (5)	-
	10-0" (4)				
REQUIRED FASTENERS @ CONNECTIONS	(4) 16d OR SIMPSON 'LUS' HANGER	(4) 16d	(4) 16d		(2) 16d @ 16" O.C. @ WOOD STUDS AND 5/8"Ø A.B. @ 48" O.C. @ CONCRETE & MASONRY.

SCHEDULE ASSUMES:
1. 2x4 DF #2 MEMBERS U.N.O.
2. 13.0 PSF D.L. + 10 PSF L.L.
3. MAX D.L. DEFLECTION = L/360
4. INDICATES 2x6 DF #2 MEMBER REQUIRED.
5. INDICATES DBL. 2x4 W/ 16d @ 12" O.C. STITCH NAILED IN "T" SHAPE.
6. ALL HORIZONTAL MEMBERS LONGER THAN 6'-0" MUST HAVE A 2x4 STRONG BACK CONTINUOUS @ MIDSPAN. USE (2) 16d @ CONNECTIONS.

NOTE:
BRACES REQUIRED AT ALL VERTICAL OFFSETS. ALTERNATE DIRECTION OF BRACES WHERE POSSIBLE.

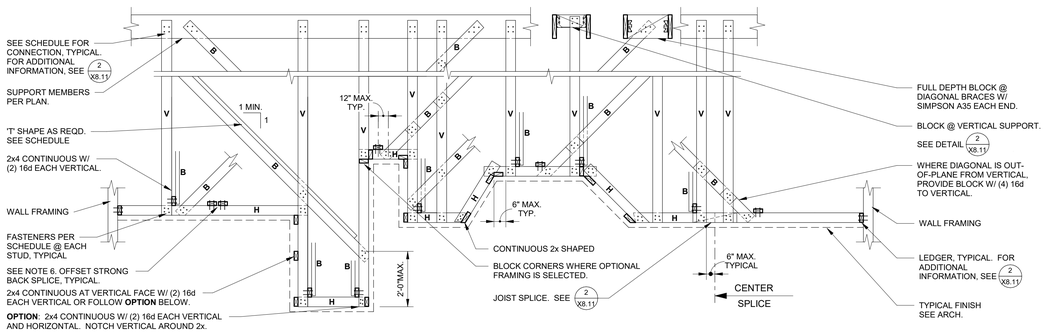

SOFFIT FRAMING

NO SCALE

5 / S1.08

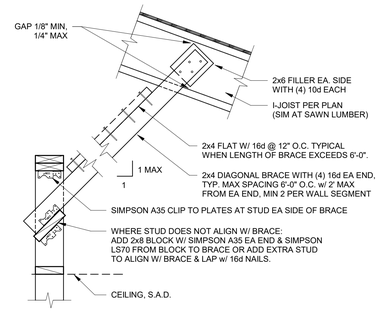

CONDITION A: WALL PERPENDICULAR TO I-JOISTS

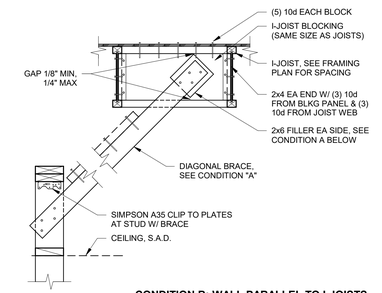

CONDITION B: WALL PARALLEL TO I-JOISTS

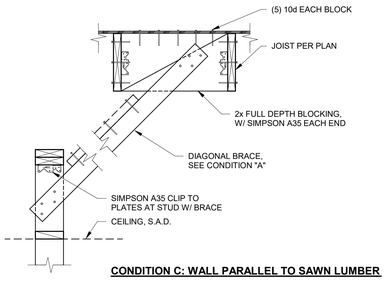

CONDITION C: WALL PARALLEL TO SAWN LUMBER

NON-BEARING PARTIAL HEIGHT WALL PARTITION

1" = 1'-0"

6 / S1.08

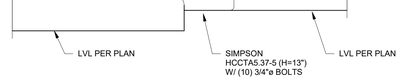

LVL CANTILEVER CONNECTION

1" = 1'-0"

7 / S1.08

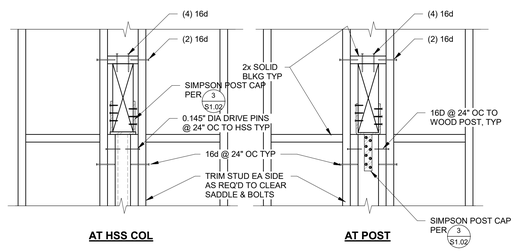

TYP GLB/LVL BEAM INTO STUD WALL

1" = 1'-0"

8 / S1.08

CORNERSTONE structural engineering group
986 W. Alluvial Avenue, Suite 201
Fresno, California 93711
559.320.3200
fax 559.320.3201

integrated designs
by SOMAM, Inc.
ARCHITECTURE
ENGINEERING
INTERIOR DESIGN
6011 N. FRESNO STREET, SUITE 130
FRESNO CALIFORNIA 93710
P:(559) 436-0881 F:(559) 436-0887
E: design@somam.com
integrateddesigns.com

DSA STAMP
IDENTIFICATION STAMP
DIV. OF THE STATE ARCHITECT
APP: 02-123307 INC:
REVIEWED FOR
SS ☑ FLS ☑ ACS ☑
DATE: 10/15/2025

Owner:
WASHINGTON UNIFIED SCHOOL DISTRICT

WASHINGTON UNIFIED SCHOOL DISTRICT
6041 SOUTH ELM AVE
FRESNO, CA 93706

Project Name:
STUDENT SERVICES

Project Address:
WASHINGTON UNION HIGH SCHOOL
6041 SOUTH ELM AVE,
FRESNO, CA 93706

Ownership of Documents
This document, the ideas and designs incorporated herein, as an instrument of Professional Service is the property of Integrated Designs by SOMAM Inc. and is not to be used, in whole or in part for any other project without written authorization.
© COPYRIGHT 2022

Stamp:
REGISTERED PROFESSIONAL ENGINEER
DUSTIN G. LEE
No. 35603
EXP. 3/31/27
STRUCTURAL
STATE OF CALIFORNIA

Sheet Title:
TYPICAL DETAILS No. 8

Job No.:
5613

Sheet No.:
S1.08

Release: Date:

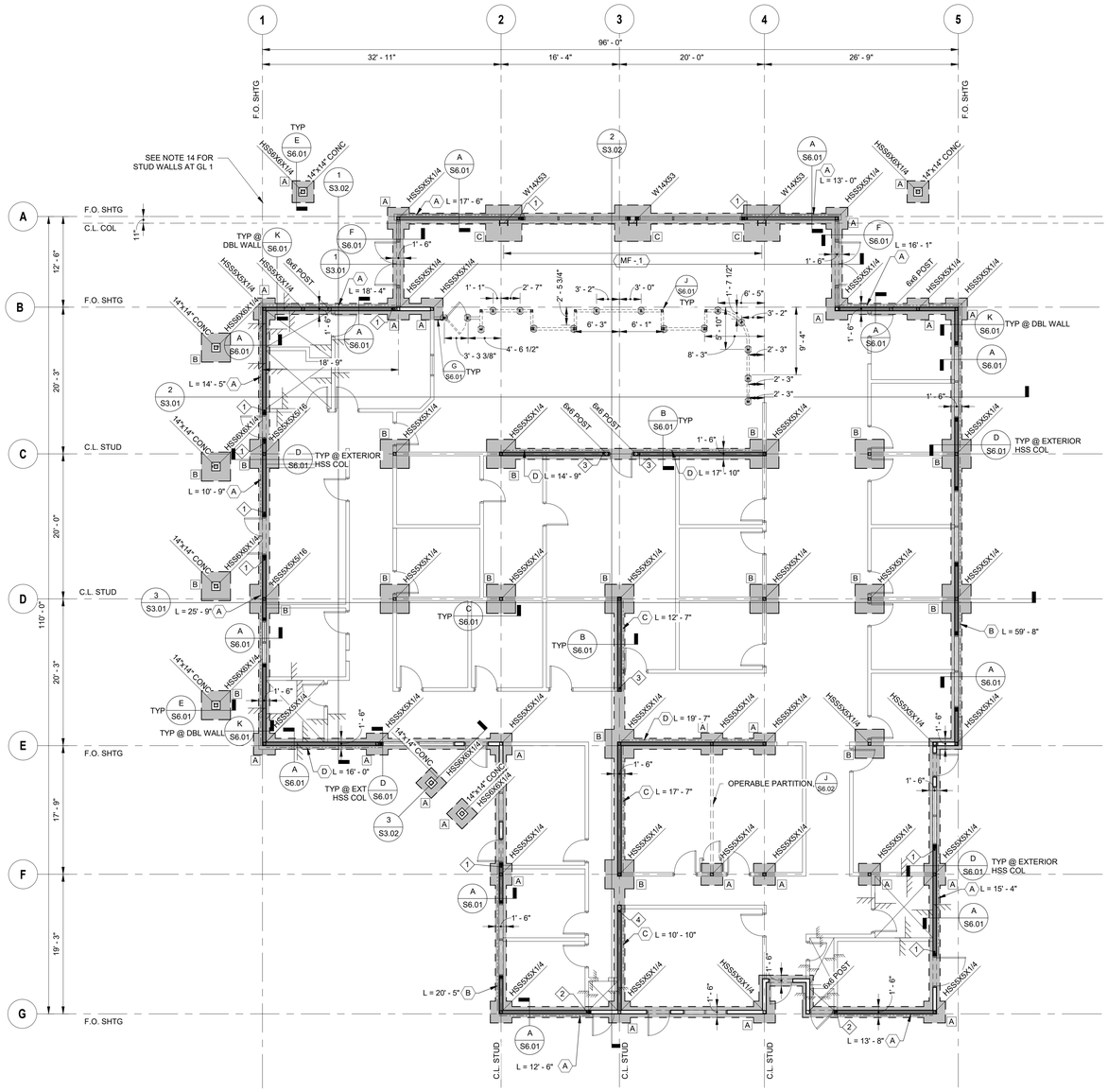

FOUNDATION PLAN

1/8" = 1'-0"

FOUNDATION PLAN NOTES & SYMBOLS

FOUNDATION PLAN NOTES:

1. REFER TO GENERAL NOTES & SPECIFICATIONS ON SHEET S0.01 & S0.02.
2. SEE SHEET S1.01-S1.08 FOR TYPICAL FRAMING DETAILS.
3. TOP OF SLAB & GROUND FLOOR REFERENCE ELEVATION = +[0' - 0"] TYP, U.N.O.
4. FOR DETAILED SOILS INFORMATION AND COMPLETE REQUIREMENTS, REFER TO SOILS REPORT.
5. SEE 12 / S1.01 FOR BUILDING PAD PREPARATION, INCLUDING OVER EXCAVATION AND FILL REQUIREMENTS PER THE SOILS REPORT FOR DETAILED SOILS INFORMATION AND COMPLETE REQUIREMENTS, REFER TO SOILS REPORT.
6. CONTRACTOR TO VERIFY ALL DIMENSIONS AND ELEVATIONS SHOWN WITH ARCHITECTURAL DRAWINGS AND INFORM BOTH ARCHITECT AND ENGINEER OF ANY CONFLICTING INFORMATION.
7. CONTRACTOR SHALL FIELD VERIFY ALL EXISTING SIZES, CONDITIONS, MEMBER ELEVATIONS AND DIMENSIONS BEFORE BEGINNING CONSTRUCTION AND/OR ORDERING MATERIALS. ANY CONDITIONS ENCOUNTERED IN THE FIELD THAT CONFLICT WITH THESE PLANS SHALL BE BROUGHT TO THE ATTENTION OF THE ENGINEER IMMEDIATELY.
8. THE SIZE & LOCATION OF ALL FOOTING AND SLAB PENETRATIONS SHALL BE SUBMITTED TO THE ENGINEER FOR REVIEW PRIOR TO INSTALLATION.
9. 5" THICK SLAB-ON-GRADE SECTION AS FOLLOWS: 5" THICK CONCRETE SLAB w/ #4 @ 18" O.C. EACH WAY AT 2" BELOW TOP OF SLAB. PLACE SLAB OVER SLAB MEMBRANE AND 6" OF 3/4" CRUSHED ROCK.
10. CONTROL JOINTS ARE TO BE INSTALLED @ 12'-6" O.C. MAX AS SHOWN.
11. CONCRETE CONTRACTOR IS RESPONSIBLE FOR THE PLACEMENT OF ALL EMBEDDED ITEMS.
12. ANCHOR BOLTS AND BASE PLATES SHALL NOT BE WET SET.
13. ALL DIMENSIONS ARE TO CENTERLINE OF COLUMNS OR FACE OF SHEATHING, TYPICAL UNLESS NOTED OTHERWISE.
14. STUDWALL CONSTRUCTION SHALL BE:
    2x6 STUDS @ 16" O.C., U.N.O.
    2x6 PT SILL PLATE, U.N.O. 5/8" Ø.
    AB @ 48" O.C. W/ 9" MIN EMBED BELOW TOP OF SLAB.
    THE OUTSIDE FACE OF EXTERIOR WALLS SHALL BE SHEATHED W/ 1/2" CDX PLYWOOD. EDGE NAILING SHALL BE 10d @ 6" O.C. AND FIELD NAILING SHALL BE 10d @ 12" O.C., U.N.O.
15. SEE SLAB & CURB PLAN DRAWINGS FOR CURB LOCATIONS.
16. ALL 4x & 6x POSTS SHALL BE SUPPORTED WITH SIMPSON ABU POST BASES W/ 5/8" Ø. x 8" EMBED ANCHOR BOLTS, U.N.O.

1. 1 / A101 — INDICATES DETAIL/SECTION VIEW WITH VIEW DIRECTION ARROW, DETAIL NUMBER AND SHEET REFERENCE.
2. 1 — INDICATES GRID
3. INDICATES FOOTING
4. INDICATES STEP/DEPRESSION 7 / S1.01
5. A, L = X' - X" — INDICATES SHEARWALL CONSTRUCTION WITH NAILING TAG.
6. INDICATES SHEAR WALL LENGTH. SEE SCHEDULE. 1 / S1.05
7. INDICATES STUDWALL. SEE PLAN NOTES & 1 / S1.03
8. 1 — INDICATES HOLDOWN TAG. SEE SCHEDULE. 2 / S1.05
9. A — INDICATES FOUNDATION TAG. SEE SCHEDULE.
10. MF - 1 — INDICATES MOMENT FRAME, SEE SHEET S5.01.
13. -[1' - 0"] — INDICATES TOP OF FOOTING EELVATION BELOW TOP OF SLAB. TOP OF FOOTING SHALL BE 1' - 0" BELOW TOP OF SLAB, UNO
14. C — INDICATES C3X6 CHANNEL AND DRILLED PIER FOOTING PER 13 / S1.01 ALL CHANNELS TO BE CENTERED IN WALL, UNO. S.A.D. FOR WALL DIMENSIONS. CONNECT PARTIAL HEIGHT WALLS TO FULL HEIGHT CROSS WALLS PER G / S6.01 . AT PARTIAL HEIGHT WALL CORNERS WITRHOUT A CHANNEL, FRAME PER J / S6.01. PLAN DIMENSIONS ARE TO CENTERLINE OF CHANNEL.
15. INDICATES PARTIAL HEIGHT WALL, S.A.D. A/A2.03

FOOTING SCHEDULE				
TYPE	SIZE	REINFORCING		REMARKS
		LONGITUDINAL	TRANSVERSE	
A	3'-0" SQ x 1'-6"	3 - #6	3 - #6	1,2
B	4'-0" SQ x 1'-6"	4 - #6	4 - #6	1,2
C	5'-0" SQ x 2'-0"	5 - #6	5 - #6	1,2

NOTES:
1. RUN CONTINUOUS GRADE BEAM STEEL THROUGH FOOTING AS OCCURS.
2. REINFORCING INDICATES TOP AND BOTTOM MAT.

SLAB & CURB PLAN

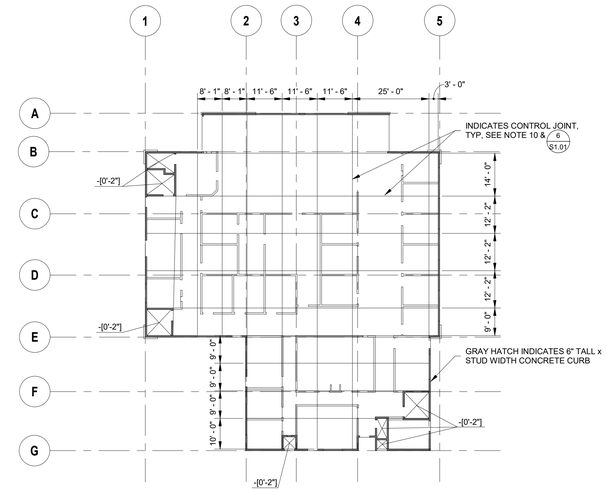

DSA STAMP
IDENTIFICATION STAMP
DIV. OF THE STATE ARCHITECT
APP: 02-123307 INC:
REVIEWED FOR
SS ☑ FLS ☑ ACS ☑
DATE: 10/15/2025

CORNERSTONE structural engineering group
986 W. Alluvial Avenue, Suite 201
Fresno, California 93711
559.320.3200
fax 559.320.3201

Owner:

WASHINGTON UNIFIED SCHOOL DISTRICT

6041 SOUTH ELM AVE
FRESNO, CA 93706

Project Name:

STUDENT SERVICES

Project Address:

WASHINGTON UNION HIGH SCHOOL

6041 SOUTH ELM AVE,
FRESNO, CA 93706

integrated designs
by SOMAM, Inc.

ARCHITECTURE
ENGINEERING
INTERIOR DESIGN

6011 N. FRESNO STREET, SUITE 130
FRESNO CALIFORNIA 93710
P:(559) 436-0881 F:(559) 436-0887
E: design@somam.com
integrateddesigns.com

Ownership of Documents

This document, the ideas and designs incorporated herein, as an instrument of Professional Service is the property of Integrated Designs by SOMAM Inc. and is not to be used, in whole or in part for any other project without written authorization.

© COPYRIGHT 2022

Stamp:

REGISTERED PROFESSIONAL ENGINEER DUSTIN G. LEE No. 39603 EXP. 3/31/27 STRUCTURAL STATE OF CALIFORNIA

Sheet Title:

FOUNDATION PLAN

Job No.:

5613

Sheet No.:

S2.01

Release: Date:

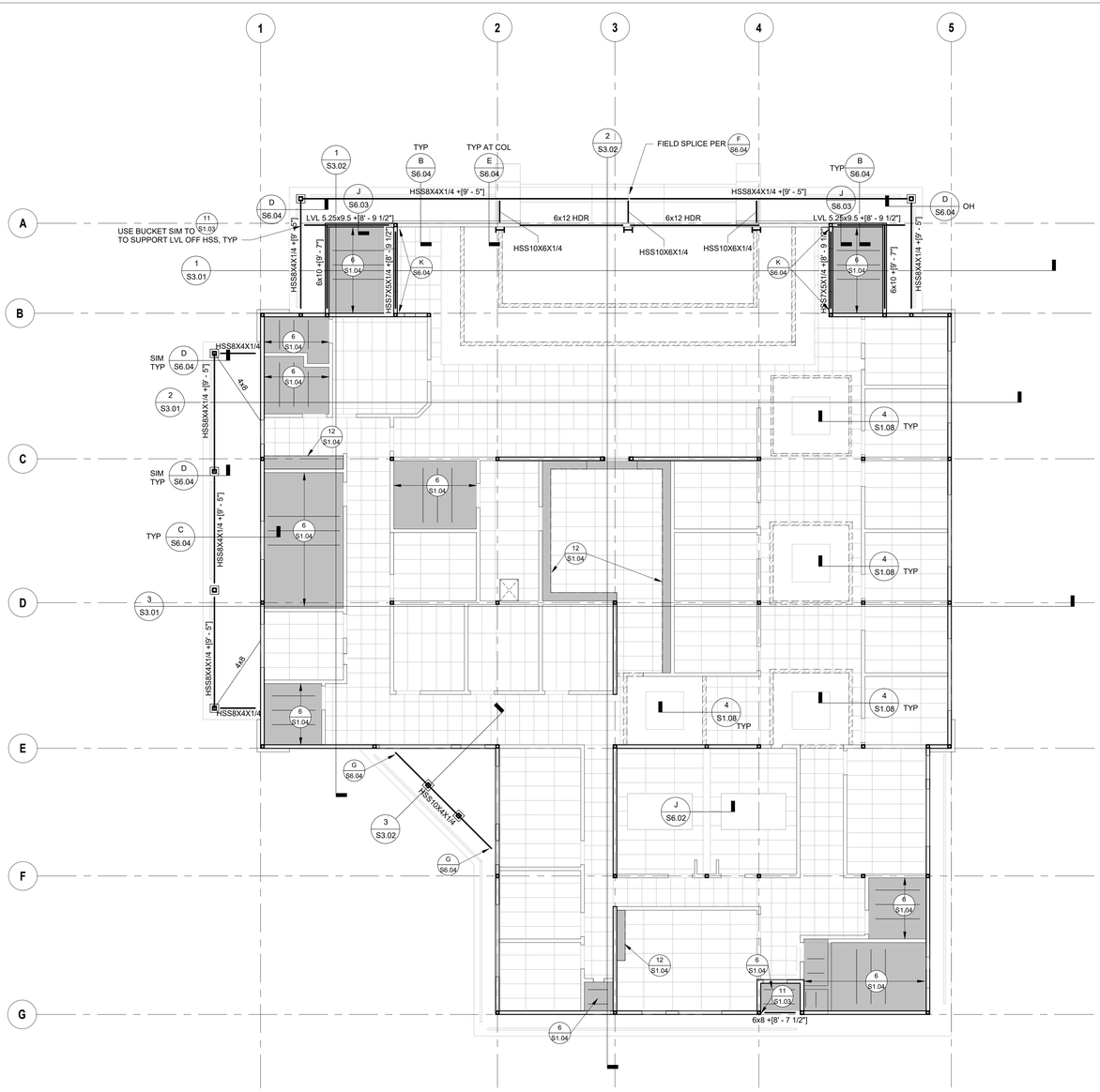

CEILING FRAMING PLAN

1/8" = 1'-0"

CEILING PLAN NOTES & SYMBOLS

CEILING FRAMING NOTES:

1. REFER TO GENERAL NOTES & SPECIFICATIONS ON SHEET S0.01 & S0.02.
2. SEE SHEET S1.01-S1.08 FOR TYPICAL DETAILS.
3. AT CEILING FRAMING, PROVIDE GYPSUM BOARD (THICKNESS PER ARCH, 1/2" MIN, 1 1/4" MAX), W/ #6 SELF DRILLING DRYWALL SCREWS @ 7" OC EDGE FASTENING & 12" OC FIELD FASTENING IN COMPLIANCE WITH CBC SECTION 2508.6
4. AT NON SHEARWALLS SUPPORTING CEILING FRAMING, PROVIDE GYPSUM BOARD FULL HEIGHT (THICKNESS PER ARCH, 1/2" MIN), W/ #6 SELF DRILLING DRYWALL SCREWS @ 7" OC EDGE FASTENING & 12" OC FIELD FASTENING
5. CONTRACTOR TO VERIFY ALL DIMENSIONS AND ELEVATIONS SHOWN WITH ARCHITECTURAL DRAWINGS AND INFORM BOTH ARCHITECT AND ENGINEER OF ANY CONFLICTING INFORMATION.
6. NO PENETRATIONS FOR PIPING, CONDUIT, OR DUCTWORK SHALL BE MADE THRU THE JOISTS UNLESS APPROVED IN WRITING BY THE ENGINEER.
7. ALL DIMENSIONS ARE TO FACE OF WALL, UNLESS NOTED OTHERWISE.
8. INDICATES CEILING JOISTS, SEE 6 S1.04

DSA STAMP

IDENTIFICATION STAMP
DIV. OF THE STATE ARCHITECT
APP: 02-123307 INC:
REVIEWED FOR
SS ☑ FLS ☑ ACS ☑
DATE: 10/15/2025

CORNERSTONE structural engineering group
986 W. Alluvial Avenue, Suite 201
Fresno, California 93711
559.320.3200
fax 559.320.3201

Owner:

WASHINGTON UNIFIED SCHOOL DISTRICT

6041 SOUTH ELM AVE
FRESNO, CA 93706

Project Name:

STUDENT SERVICES

Project Address:

WASHINGTON UNION HIGH SCHOOL

6041 SOUTH ELM AVE,
FRESNO, CA 93706

integrated designs
by SOMAM, Inc.

ARCHITECTURE
ENGINEERING
INTERIOR DESIGN

6011 N. FRESNO STREET, SUITE 130
FRESNO CALIFORNIA 93710
P:(559) 436-0881 F:(559) 436-0887
E: design@somam.com
integrateddesigns.com

Ownership of Documents

This document, the ideas and designs incorporated herein, as an instrument of Professional Service is the property of Integrated Designs by SOMAM Inc. and is not to be used, in whole or in part for any other project without written authorization.

© COPYRIGHT 2022

Stamp:

REGISTERED PROFESSIONAL ENGINEER
DUSTIN G. LEE
No. 36603
EXP. 3/31/27
STRUCTURAL
STATE OF CALIFORNIA

Sheet Title:

CEILING FRAMING PLAN

Job No.:

5613

Sheet No.:

S2.02

Release: Date:

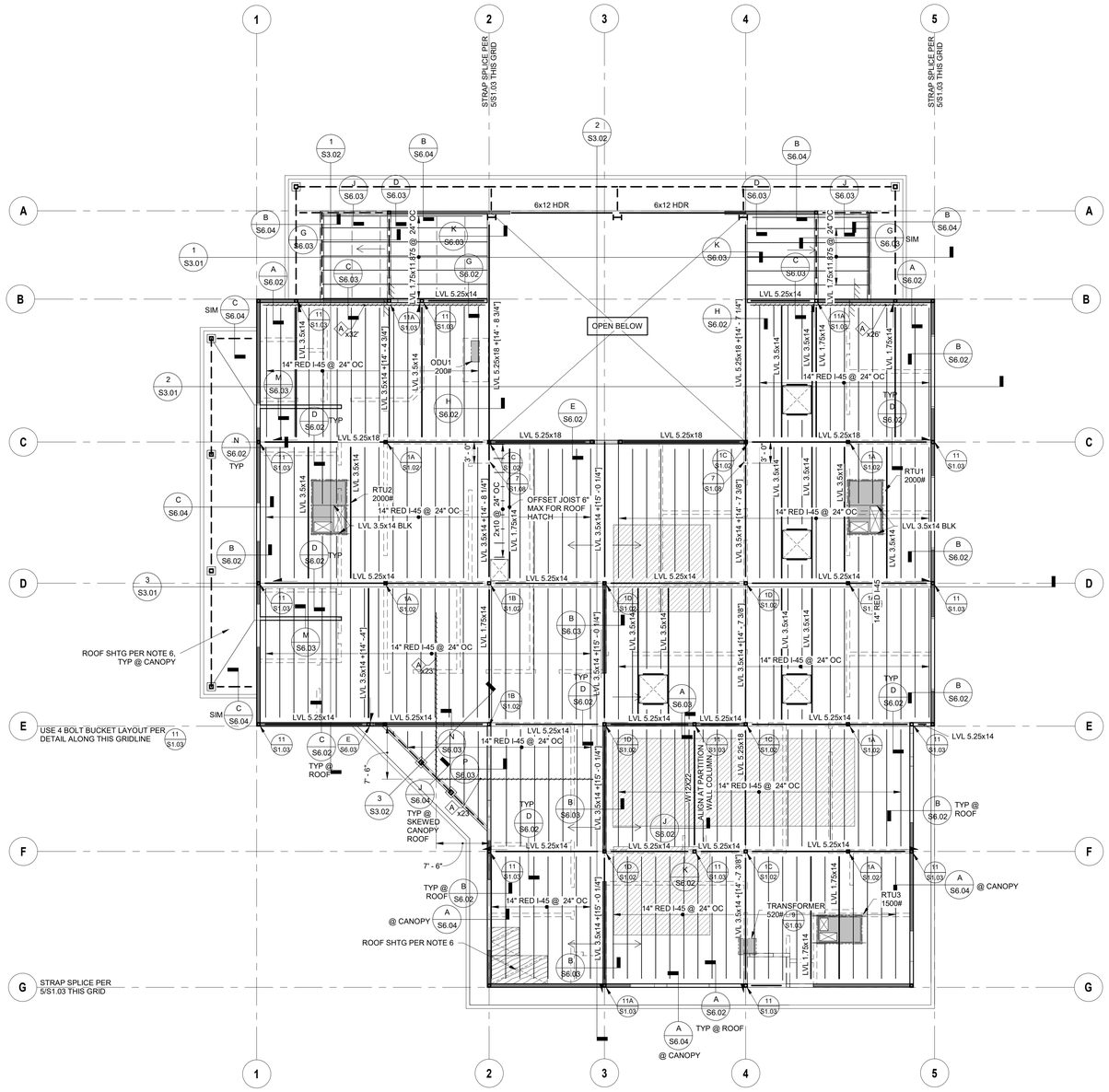

ROOF FRAMING PLAN

1/8" = 1'-0"

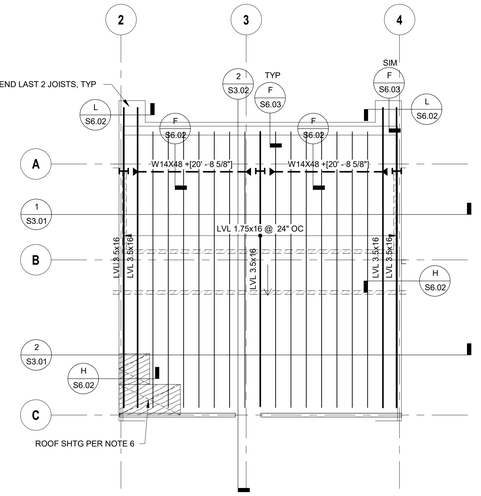

HIGH ROOF FRAMING PLAN

1/8" = 1'-0"

ROOF FRAMING PLAN NOTES & SYMBOLS

ROOF FRAMING NOTES:

1. REFER TO GENERAL NOTES & SPECIFICATIONS ON SHEET S0.01 & S0.02.
2. SEE SHEET S1.01-S1.08 FOR TYPICAL FRAMING DETAILS.
3. SEE ARCHITECTURAL DRAWINGS FOR ROOF ELEVATIONS.
4. CONTRACTOR TO VERIFY ALL DIMENSIONS AND ELEVATIONS SHOWN WITH ARCHITECTURAL DRAWINGS AND INFORM BOTH ARCHITECT AND ENGINEER OF ANY CONFLICTING INFORMATION.
5. CONTRACTOR SHALL FIELD VERIFY ALL EXISTING SIZES, CONDITIONS, MEMBER ELEVATIONS AND DIMENSIONS BEFORE BEGINNING CONSTRUCTION AND/OR ORDERING MATERIALS. ANY CONDITIONS ENCOUNTERED IN THE FIELD THAT CONFLICT WITH THESE PLANS SHALL BE BROUGHT TO THE ATTENTION OF THE ENGINEER IMMEDIATELY.
6. ROOF SHEATHING SHALL CONSIST OF 1/2" CDX PLYWOOD W/ 8d @ 6" O.C. AT BOUNDARIES AND EDGES, 10d @ 12" O.C. FIELD NAILING. ALL PLYWOOD EDGES SHALL BE FULLY BLOCKED TYPICAL, U.N.O.
7. FLOOR/ROOF DIAPHRAGM FASTENING SHALL BE APPROVED BY BUILDING DEPARTMENT PRIOR TO COVERING.
8. SEE ARCHITECTURAL DRAWINGS FOR SIZE & LOCATION OF ROOF OPENINGS.
9. VERIFY SIZE AND LOCATION OF ALL OPENINGS WITH ARCHITECTURAL DRAWINGS AND MECHANICAL DRAWINGS. NOTIFY STRUCTURAL ENGINEER IMMEDIATELY OF ANY DISCREPANCIES, TYPICAL U.N.O.
10. FIRE SPRINKLER PIPING SHALL NOT BE SUPPORTED BY MEMBERS 6" OR LESS IN DEPTH. DESIGN OF THE ATTACHMENT TO THE SUPPORTING MEMBERS SHALL BE THE RESPONSIBILITY OF THE SPRINKLER INSTALLER.
11. THE SIZE, LOCATIONS AND ORIENTATIONS OF ALL MECHANICAL UNITS, CURBS, SLEEPERS AND OPENINGS SHALL BE VERIFIED WITH THE UNIT SUPPLIERS. ANY CONFLICTS SHALL BE BROUGHT TO THE ATTENTION OF THE ENGINEER IMMMEDIATELY.
12. ROOF JOISTS SHALL BE BRIDGED EVERY 10 FEET BY SOLID 2X BLOCKING OF EQUAL STRENGTH.
13. ROOF I-JOISTS SHALL BE BRIDGED EVERY 8' FEET BY NAILED STEEL CROSS BRIDGING OF EQUAL STRENGTH.
14. ALL RAFTER TO BEAM/GIRDER CONNECTIONS SHALL BE W/ SIMPSON HU HANGERS, U.N.O.
15. ALL 14" I-JOIST TO BEAM/GIRDER CONNECTIONS SHALL BE W/ SIMPSON HU14 HANGERS, U.N.O.
16. CONTRACTOR TO USE SKEWED HANGERS IN LIEU OF HANGER SHOWN AS REQUIRED.
17. NOT USED
18. ALL 6x BEAM TO POST CONNECTIONS SHALL BE WITH ECC OR CC COLUMN CAPS, U.N.O. SEE (3/S1.02)
19. (1/A101) INDICATES DETAIL/SECTION VIEW WITH VIEW DIRECTION ARROW, DETAIL NUMBER AND SHEET REFERENCE.
20. (1) INDICATES GRID
21. INDICATES WALL BELOW
22. INDICATES SHEARWALL BELOW
23. INDICATES ROOF STEP
24. (A) INDICATES SIMPSON CMSTC16 PER (5/S1.04)
25. INDICATES FRAMED SKYLIGHT DECK OPENING. USE LVL 3.5"x14" ALL (4) SIDES. LOCATE PER ARCH. USE 4'-0" CLEAR OPENING
26. INDIICATES LATERAL MOMENT CONNECTION (A/S5.01)
27. INDICATES DIRECTION OF ROOF SLOPE. S.A.D.
28. INDICATES NEW MECHANICAL UNITS ABOVE ROOF, S.M.D. PROVIDE 4x6 BLKG AROUND PERIMETER OF UNIT AND OPENINGS FOR CURB ATTACHMENT WITH SIMPSON U HANGER EA END. SEE (8/S1.03) & (9/S1.03)
    600# INDICATES MAXIMUM UNIT WEIGHT.
29. INDICATES PARAPET BRACE, SEE (N/S6.02)
30. INDICATES HANGER STUDS FOR CEILING SOFFIT, SEE (12/S1.04)
31. INDICATES PROPOSED SOLAR ZONE, S.E.D.

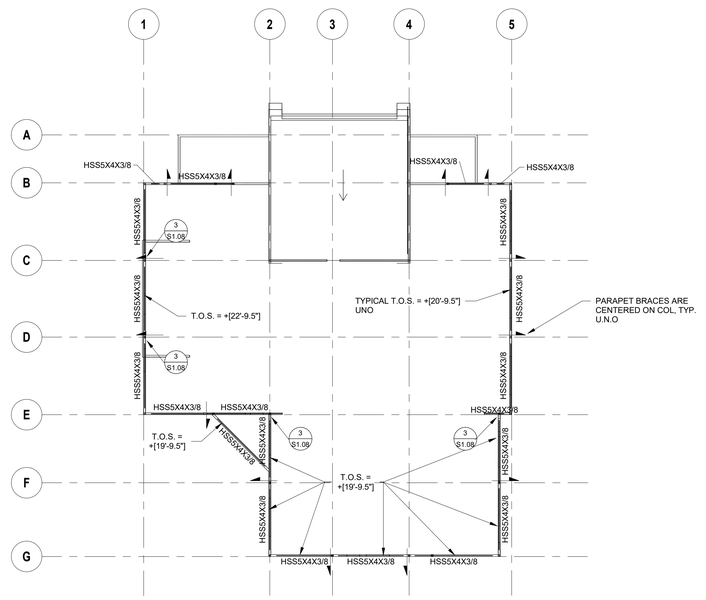

PARAPET FRAMING PLAN

1/16" = 1'-0"

DSA STAMP

IDENTIFICATION STAMP
DIV. OF THE STATE ARCHITECT
APP: 02-123307 INC:
REVIEWED FOR
SS ☑ FLS ☑ ACS ☑
DATE: 10/15/2025

CORNERSTONE structural engineering group
986 W. Alluvial Avenue, Suite 201
Fresno, California 93711
559.320.3200
fax 559.320.3201

Owner:

WASHINGTON UNIFIED SCHOOL DISTRICT

WASHINGTON UNIFIED SCHOOL DISTRICT

6041 SOUTH ELM AVE
FRESNO, CA 93706

Project Name:

STUDENT SERVICES

Project Address:

WASHINGTON UNION HIGH SCHOOL

6041 SOUTH ELM AVE,
FRESNO, CA 93706

integrated designs
by SOMAM, Inc.

ARCHITECTURE
ENGINEERING
INTERIOR DESIGN

6011 N. FRESNO STREET, SUITE 130
FRESNO CALIFORNIA 93710
P:(559) 436-0881 F:(559) 436-0887
E: design@somam.com
integrateddesigns.com

Ownership of Documents

This document, the ideas and designs incorporated herein, as an instrument of Professional Service is the property of Integrated Designs by SOMAM Inc. and is not to be used, in whole or in part for any other project without written authorization.

© COPYRIGHT 2022

Stamp:

REGISTERED PROFESSIONAL ENGINEER JUSTIN G. LEE No. 39021 EXP. 3/31/27 STRUCTURAL STATE OF CALIFORNIA

Sheet Title:

ROOF FRAMING PLAN

Job No.: **5613**

Sheet No.: **S2.03**

Release: Date:

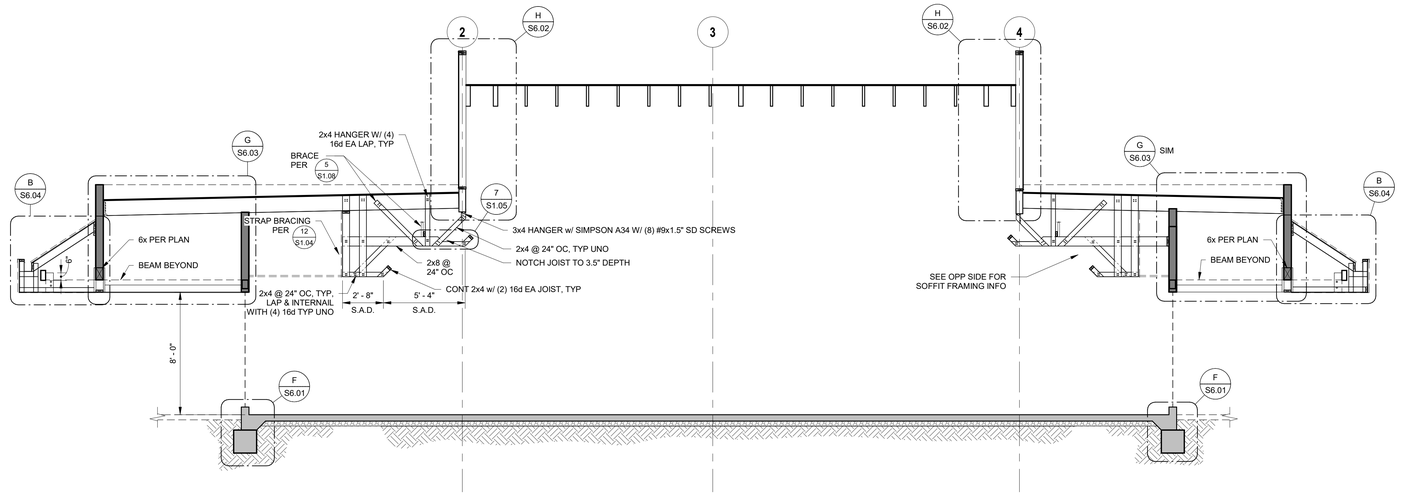

BUILDING SECTION 1/4" = 1'-0" — 1 / S3.01

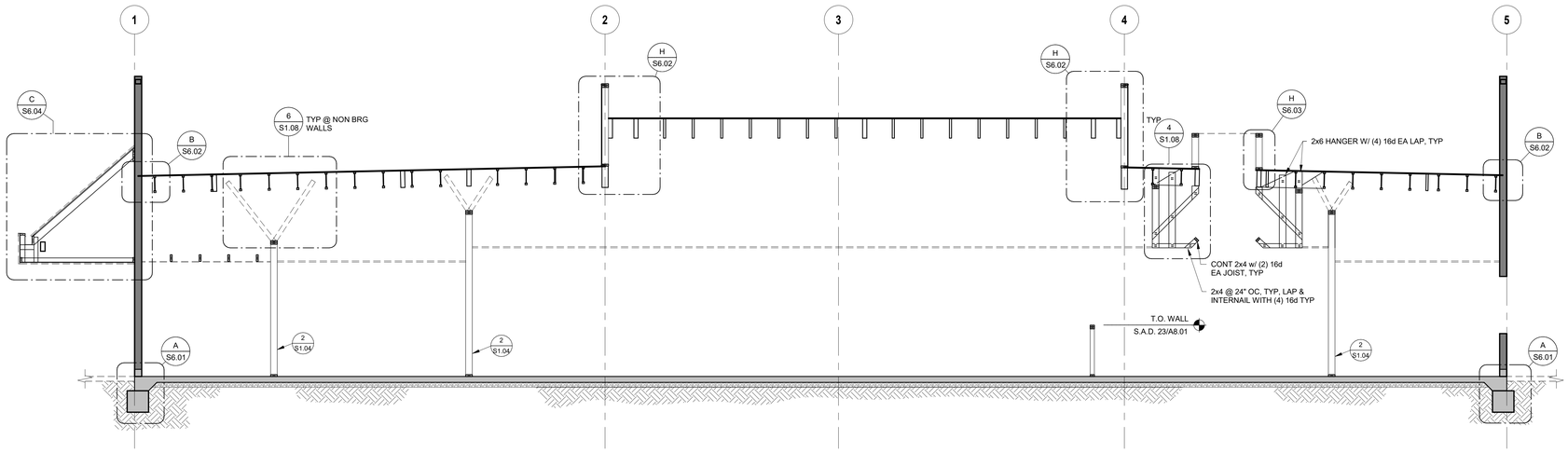

BUILDING SECTION 1/4" = 1'-0" — 2 / S3.01

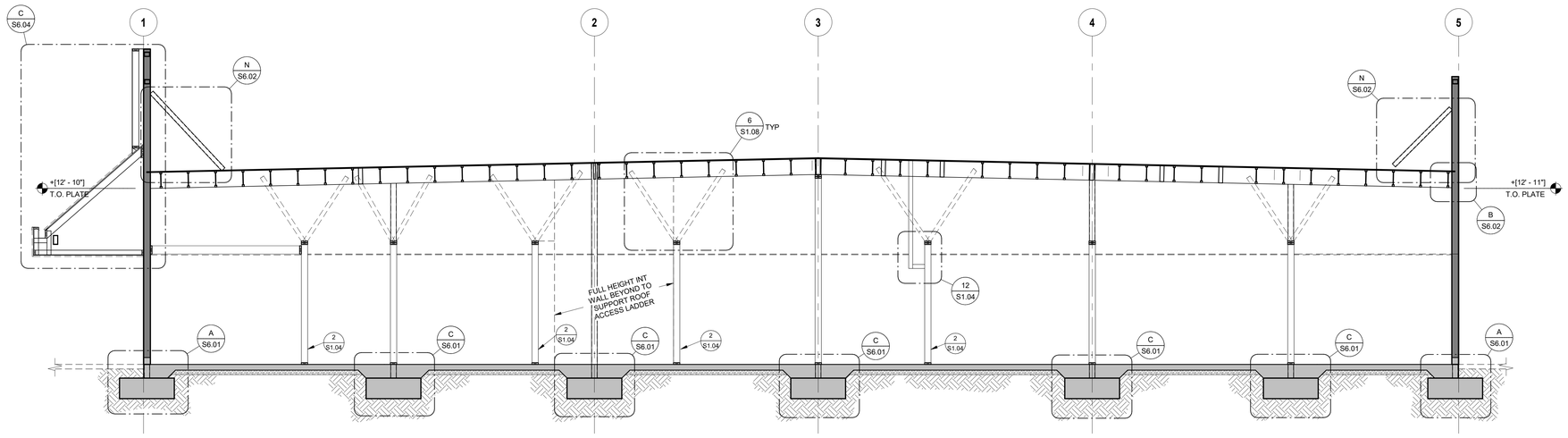

BUILDING SECTION 1/4" = 1'-0" — 3 / S3.01

DSA STAMP

IDENTIFICATION STAMP
DIV. OF THE STATE ARCHITECT
APP: 02-123307 INC:
REVIEWED FOR
SS ☑ FLS ☑ ACS ☑
DATE: 10/15/2025

CORNERSTONE structural engineering group
986 W. Alluvial Avenue, Suite 201
Fresno, California 93711
559.320.3200
fax 559.320.3201

Owner:

WASHINGTON UNIFIED SCHOOL DISTRICT

6041 SOUTH ELM AVE
FRESNO, CA 93706

Project Name:

STUDENT SERVICES

Project Address:

WASHINGTON UNION HIGH SCHOOL

6041 SOUTH ELM AVE,
FRESNO, CA 93706

integrated designs
by SOMAM, Inc.

ARCHITECTURE
ENGINEERING
INTERIOR DESIGN

6011 N. FRESNO STREET, SUITE 130
FRESNO CALIFORNIA 93710
P:(559) 436-0881 F:(559) 436-0887
E: design@somam.com
integrateddesigns.com

Ownership of Documents

This document, the ideas and designs incorporated herein, as an instrument of Professional Service is the property of Integrated Designs by SOMAM Inc. and is not to be used, in whole or in part for any other project without written authorization.

© COPYRIGHT 2022

Stamp:

REGISTERED PROFESSIONAL ENGINEER — JUSTIN G. LEE — No. 36023 — EXP. 3/31/27 — STRUCTURAL — STATE OF CALIFORNIA

Sheet Title:

BUILDING SECTIONS No. 1

Job No.: **5613**

Sheet No.: **S3.01**

Release: Date:

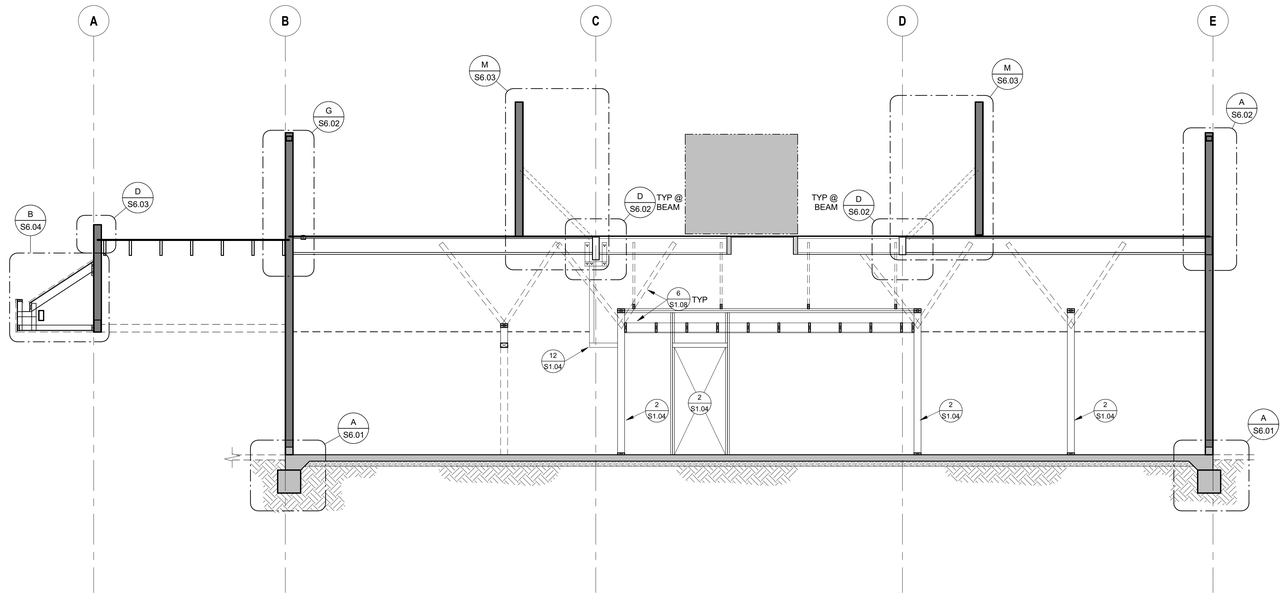

BUILDING SECTION 1 / S3.02

1/4" = 1'-0"

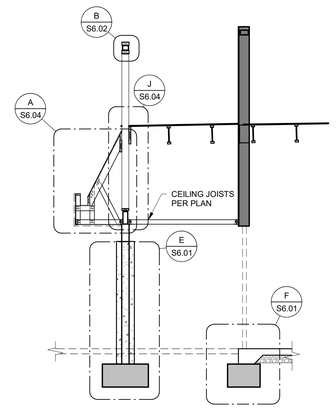

BUILDING SECTION 3 / S3.02

1/4" = 1'-0"

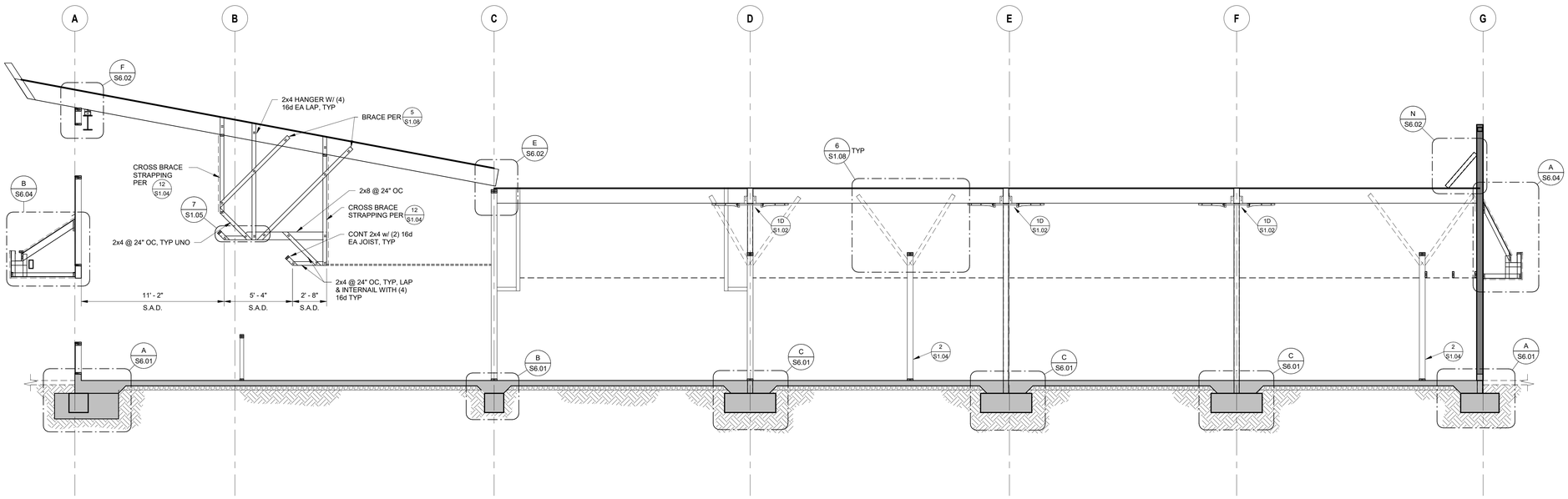

BUILDING SECTION 2 / S3.02

1/4" = 1'-0"

DSA STAMP

IDENTIFICATION STAMP
DIV. OF THE STATE ARCHITECT
APP: 02-123307 INC:
REVIEWED FOR
SS ☑ FLS ☑ ACS ☑
DATE: 10/15/2025

CORNERSTONE structural engineering group
986 W. Alluvial Avenue, Suite 201
Fresno, California 93711
559.320.3200
fax 559.320.3201

Owner:

WASHINGTON UNIFIED SCHOOL DISTRICT

WASHINGTON UNIFIED SCHOOL DISTRICT

6041 SOUTH ELM AVE
FRESNO, CA 93706

Project Name:

STUDENT SERVICES

Project Address:

WASHINGTON UNION HIGH SCHOOL

6041 SOUTH ELM AVE,
FRESNO, CA 93706

integrated designs
by SOMAM, Inc.

ARCHITECTURE
ENGINEERING
INTERIOR DESIGN

6011 N. FRESNO STREET, SUITE 130
FRESNO CALIFORNIA 93710
P:(559) 436-0881 F:(559) 436-0887
E: design@somam.com
integrateddesigns.com

Ownership of Documents

This document, the ideas and designs incorporated herein, as an instrument of Professional Service is the property of Integrated Designs by SOMAM Inc. and is not to be used, in whole or in part for any other project without written authorization.

© COPYRIGHT 2022

Stamp:

REGISTERED PROFESSIONAL ENGINEER
DUSTIN G. LEE
No. S8603
EXP. 3/31/27
STRUCTURAL
STATE OF CALIFORNIA

Sheet Title:

BUILDING SECTIONS No. 2

Job No.:

5613

Sheet No.:

S3.02

Release: Date:

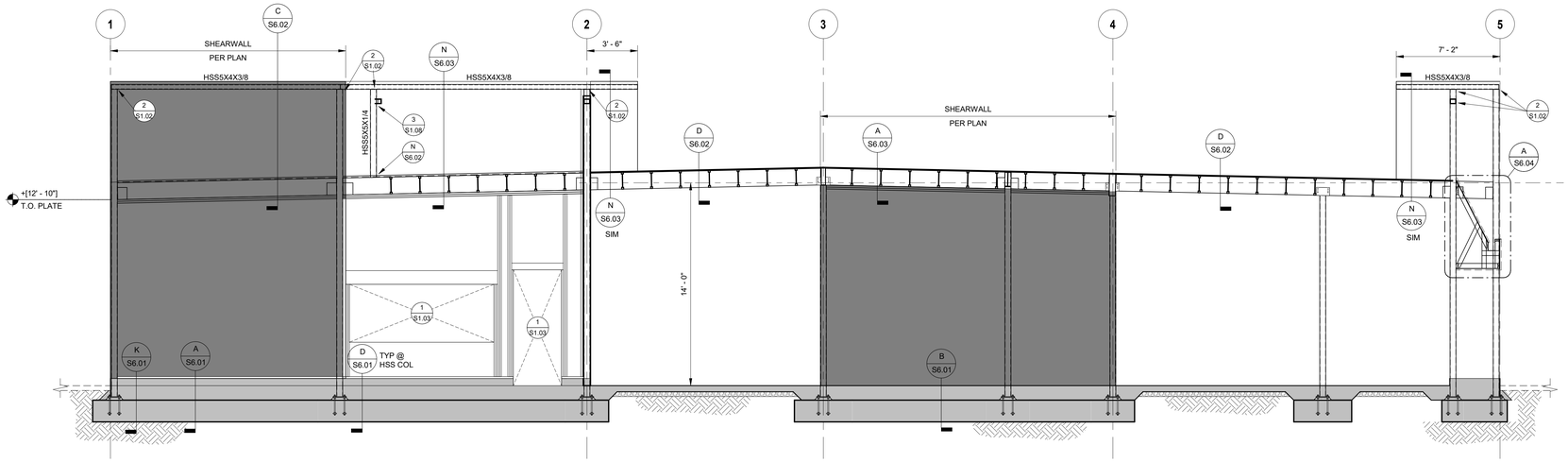

GRID E WALL ELEVATION — 1/4" = 1'-0" — 1 / S4.01

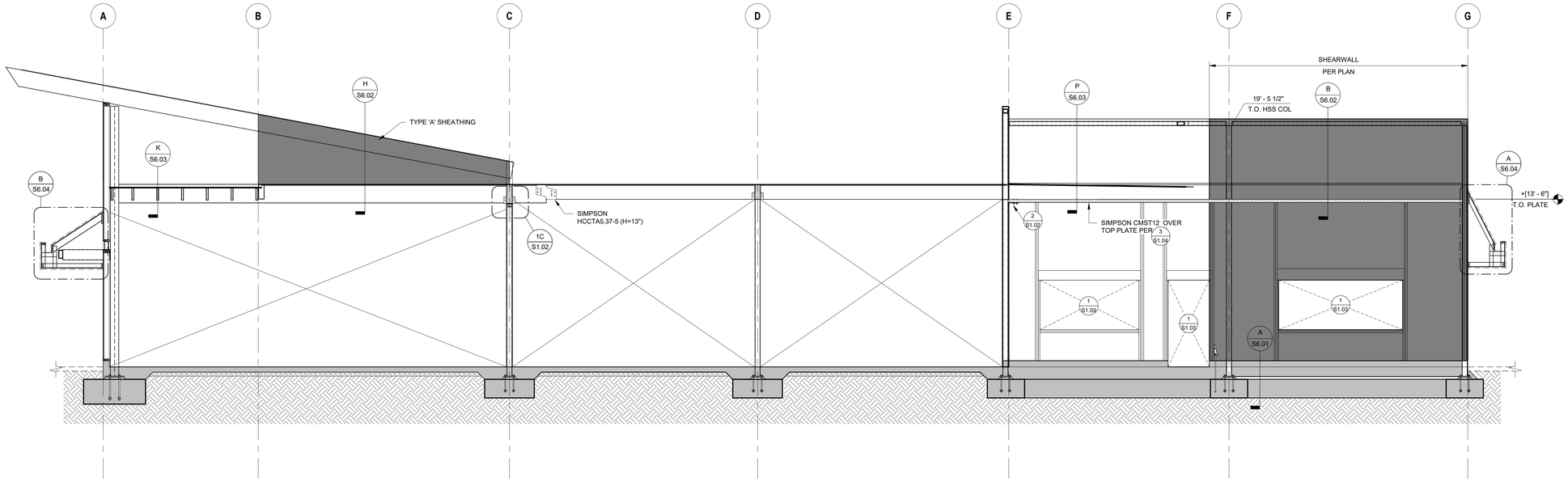

GRID 2 WALL ELEVATION — 1/4" = 1'-0" — 2 / S4.01

DSA STAMP

IDENTIFICATION STAMP
DIV. OF THE STATE ARCHITECT
APP: 02-123307 INC:
REVIEWED FOR
SS ☑ FLS ☑ ACS ☑
DATE: 10/15/2025

CORNERSTONE structural engineering group
986 W. Alluvial Avenue, Suite 201
Fresno, California 93711
559.320.3200
fax 559.320.3201

Owner:

WASHINGTON UNIFIED SCHOOL DISTRICT

6041 SOUTH ELM AVE
FRESNO, CA 93706

Project Name:

STUDENT SERVICES

Project Address:

WASHINGTON UNION HIGH SCHOOL

6041 SOUTH ELM AVE,
FRESNO, CA 93706

integrated designs
by SOMAM, Inc.

ARCHITECTURE
ENGINEERING
INTERIOR DESIGN

6011 N. FRESNO STREET, SUITE 130
FRESNO CALIFORNIA 93710
P:(559) 436-0881 F:(559) 436-0887
E: design@somam.com
integrateddesigns.com

Ownership of Documents
This document, the ideas and designs incorporated herein, as an instrument of Professional Service is the property of Integrated Designs by SOMAM Inc. and is not to be used, in whole or in part for any other project without written authorization.
© COPYRIGHT 2022

Stamp:

REGISTERED PROFESSIONAL ENGINEER
DUSTIN G. LEE
No. 39603
EXP. 3/31/27
STRUCTURAL
STATE OF CALIFORNIA

Sheet Title:

WALL ELEVATIONS No. 1

Job No.:

5613

Sheet No.:

S4.01

Release: Date:

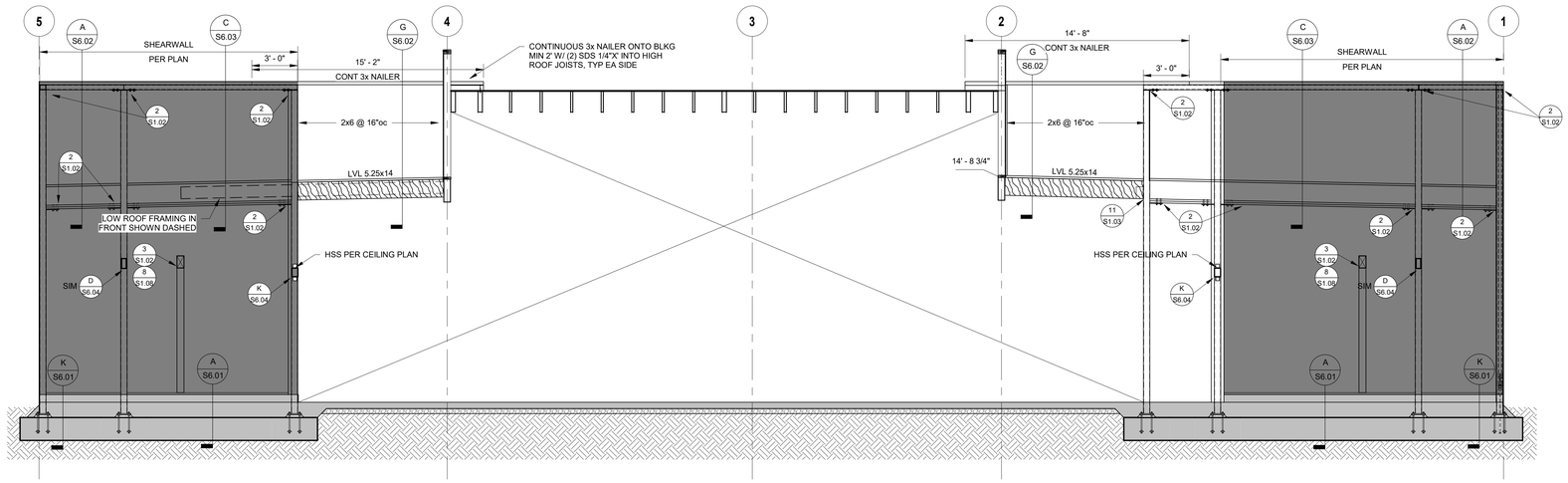

GRID B WALL ELEVATION — 1 / S4.02

1/4" = 1'-0"

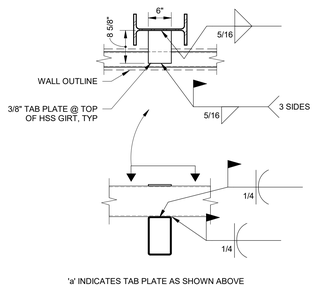

'a' INDICATES TAB PLATE AS SHOWN ABOVE

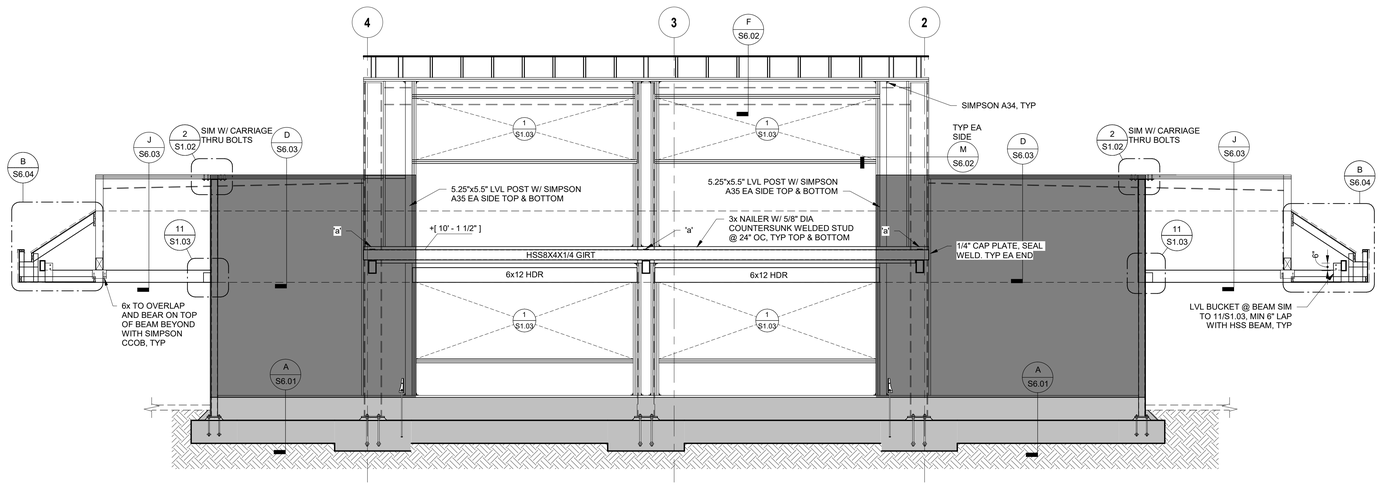

GRID A WALL ELEVATION — 2 / S4.02

1/4" = 1'-0"

DSA STAMP

IDENTIFICATION STAMP
DIV. OF THE STATE ARCHITECT
APP: 02-123307 INC:
REVIEWED FOR
SS ☑ FLS ☑ ACS ☑
DATE: 10/15/2025

CORNERSTONE structural engineering group
986 W. Alluvial Avenue, Suite 201
Fresno, California 93711
559.320.3200
fax 559.320.3201

Owner:

WASHINGTON UNIFIED SCHOOL DISTRICT

WASHINGTON UNIFIED SCHOOL DISTRICT

6041 SOUTH ELM AVE
FRESNO, CA 93706

Project Name:

STUDENT SERVICES

Project Address:

WASHINGTON UNION HIGH SCHOOL

6041 SOUTH ELM AVE,
FRESNO, CA 93706

integrated designs
by SOMAM, Inc.

ARCHITECTURE
ENGINEERING
INTERIOR DESIGN

6011 N. FRESNO STREET, SUITE 130
FRESNO CALIFORNIA 93710
P:(559) 436-0881 F:(559) 436-0887
E: design@somam.com
integrateddesigns.com

Ownership of Documents
This document, the ideas and designs incorporated herein, as an instrument of Professional Service is the property of Integrated Designs by SOMAM Inc. and is not to be used, in whole or in part for any other project without written authorization.
© COPYRIGHT 2022

Stamp:

REGISTERED PROFESSIONAL ENGINEER — DUSTIN G. LEE — No. S6025 — EXP. 3/31/27 — STRUCTURAL — STATE OF CALIFORNIA

Sheet Title:

WALL ELEVATIONS No. 2

Job No.:

5613

Sheet No.:

S4.02

Release: Date:

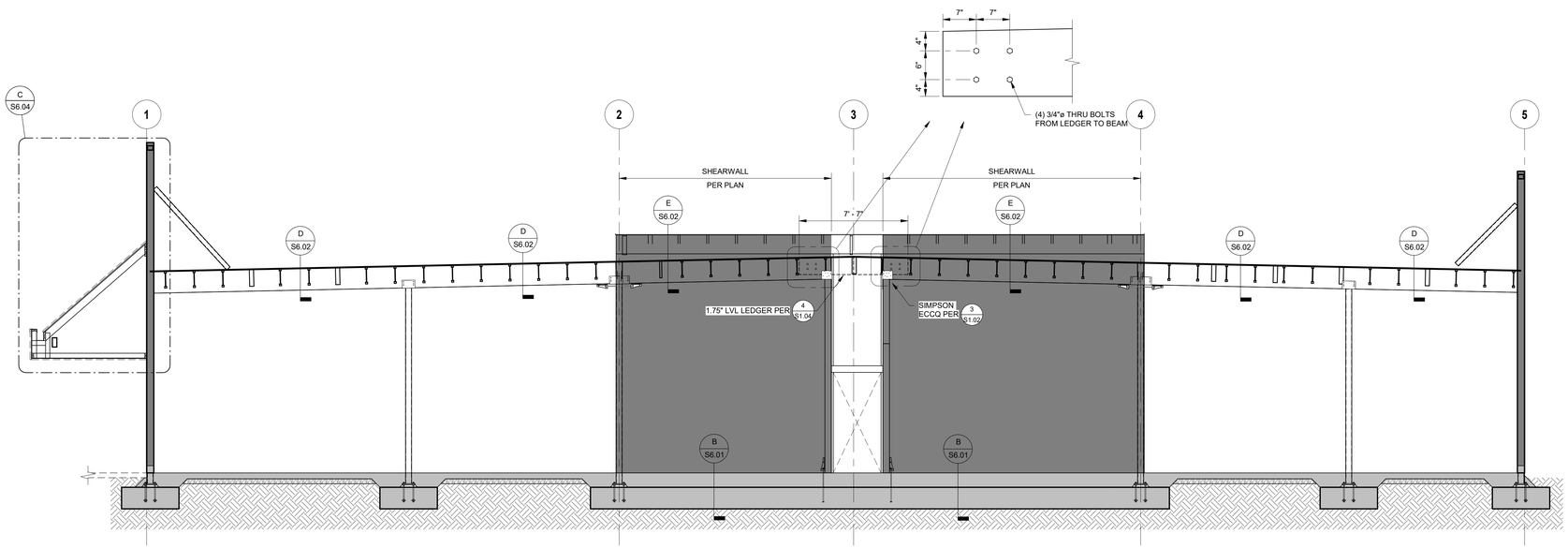

GRID C WALL ELEVATION 1 / S4.03

1/4" = 1'-0"

DSA STAMP

IDENTIFICATION STAMP
DIV. OF THE STATE ARCHITECT
APP: 02-123307 INC:
REVIEWED FOR
SS ☑ FLS ☑ ACS ☑
DATE: 10/15/2025

CORNERSTONE structural engineering group
986 W. Alluvial Avenue, Suite 201
Fresno, California 93711
559.320.3200
fax 559.320.3201

Owner:

WASHINGTON UNIFIED SCHOOL DISTRICT

6041 SOUTH ELM AVE
FRESNO, CA 93706

Project Name:

STUDENT SERVICES

Project Address:

WASHINGTON UNION HIGH SCHOOL

6041 SOUTH ELM AVE,
FRESNO, CA 93706

integrated designs
by SOMAM, Inc.

ARCHITECTURE
ENGINEERING
INTERIOR DESIGN

6011 N. FRESNO STREET, SUITE 130
FRESNO CALIFORNIA 93710
P:(559) 436-0881 F:(559) 436-0887
E: design@somam.com
integrateddesigns.com

Ownership of Documents
This document, the ideas and designs incorporated herein, as an instrument of Professional Service is the property of Integrated Designs by SOMAM Inc. and is not to be used, in whole or in part for any other project without written authorization.
© COPYRIGHT 2022

Stamp:

REGISTERED PROFESSIONAL ENGINEER
DUSTIN G. LEE
No. 35623
EXP. 3/31/27
STRUCTURAL
STATE OF CALIFORNIA

Sheet Title:

WALL ELEVATIONS No. 3

Job No.:

5613

Sheet No.:

S4.03

Release: Date:

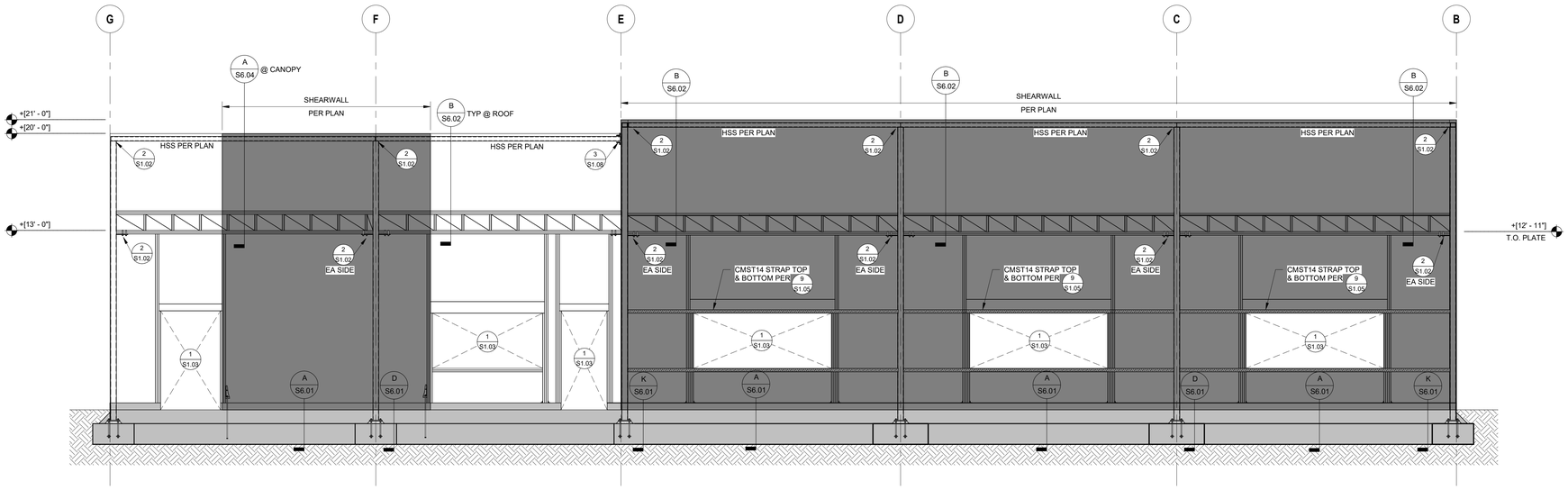

GRID 5 WALL ELEVATION — 1 / S4.04

1/4" = 1'-0"

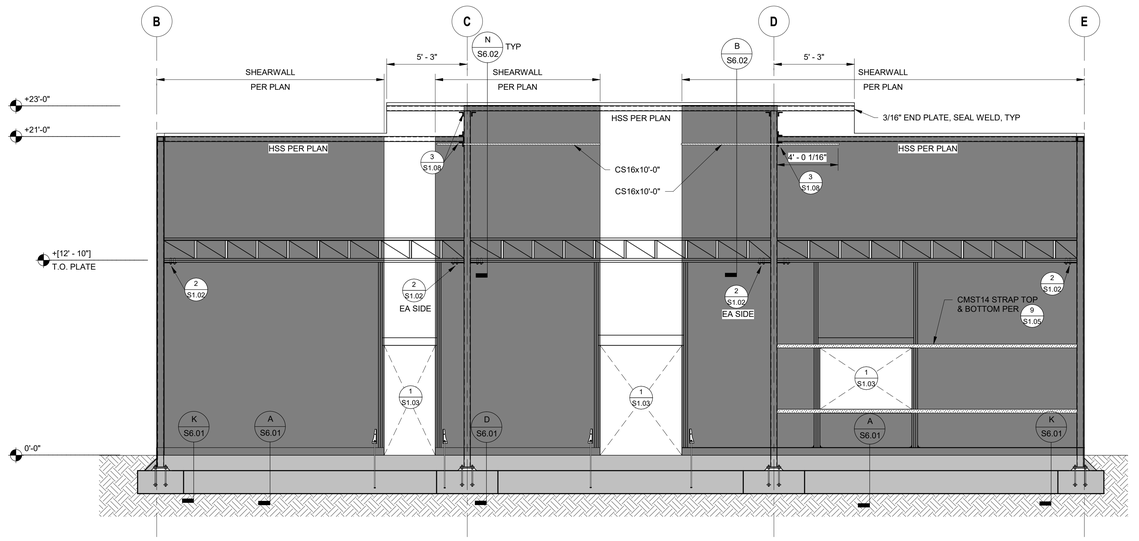

GRID 1 WALL ELEVATION — 2 / S4.04

1/4" = 1'-0"

DSA STAMP

IDENTIFICATION STAMP
DIV. OF THE STATE ARCHITECT
APP: 02-123307 INC:
REVIEWED FOR
SS ☑ FLS ☑ ACS ☑
DATE: 10/15/2025

CORNERSTONE structural engineering group
986 W. Alluvial Avenue, Suite 201
Fresno, California 93711
559.320.3200
fax 559.320.3201

Owner:

WASHINGTON UNIFIED SCHOOL DISTRICT

6041 SOUTH ELM AVE
FRESNO, CA 93706

Project Name:

STUDENT SERVICES

Project Address:

WASHINGTON UNION HIGH SCHOOL

6041 SOUTH ELM AVE,
FRESNO, CA 93706

integrated designs
by SOMAM, Inc.

ARCHITECTURE
ENGINEERING
INTERIOR DESIGN

6011 N. FRESNO STREET, SUITE 130
FRESNO CALIFORNIA 93710
P:(559) 436-0881 F:(559) 436-0887
E: design@somam.com
integrateddesigns.com

Ownership of Documents
This document, the ideas and designs incorporated herein, as an instrument of Professional Service is the property of Integrated Designs by SOMAM Inc. and is not to be used, in whole or in part for any other project without written authorization.
© COPYRIGHT 2022

Stamp:

REGISTERED PROFESSIONAL ENGINEER
DUSTIN G. LEE
No. 39603
EXP. 3/31/27
STRUCTURAL
STATE OF CALIFORNIA

Sheet Title:

WALL ELEVATIONS No. 4

Job No.: **5613**

Sheet No.: **S4.04**

Release: Date:

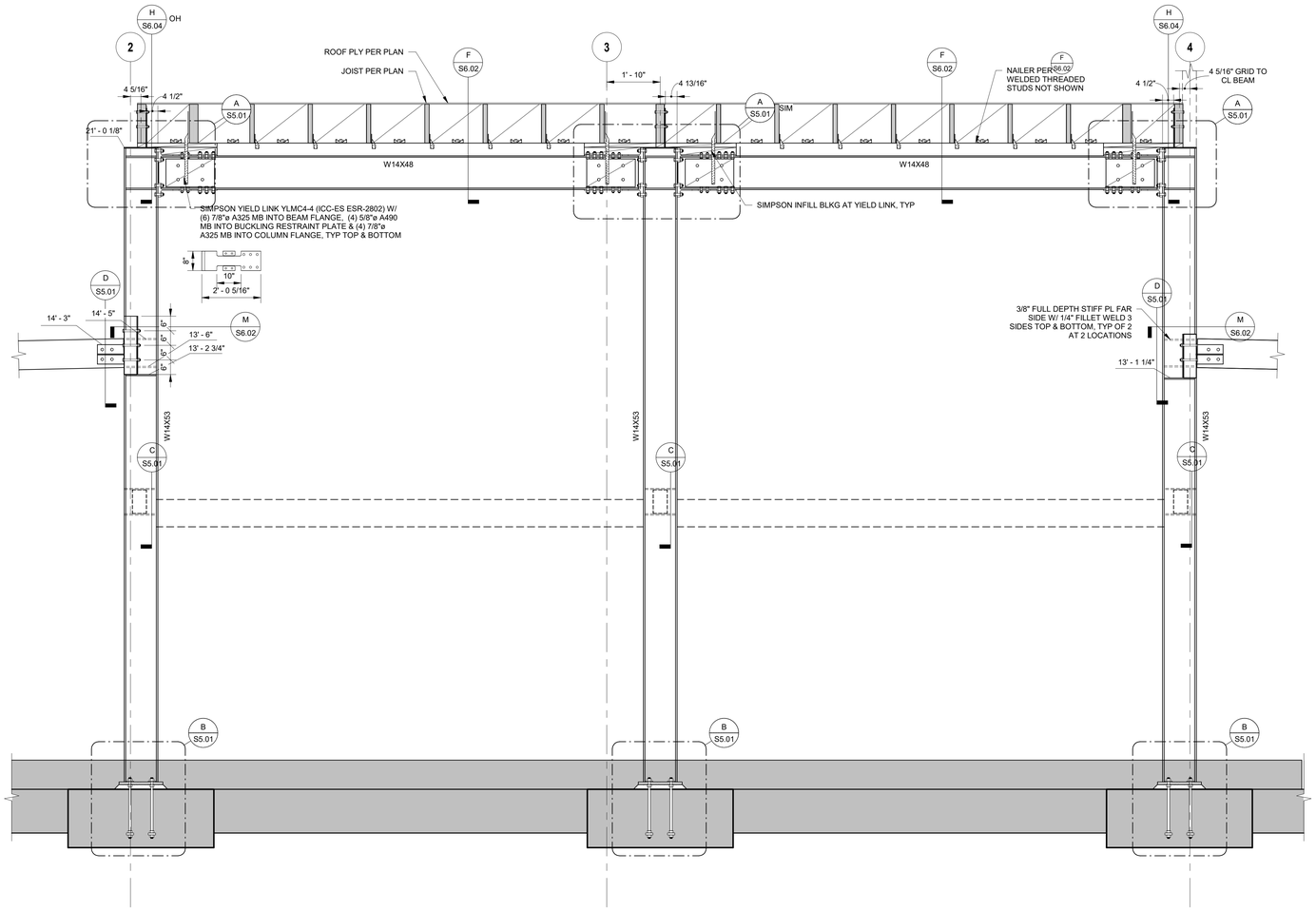

MOMENT FRAME ELEVATION MF-1

1/2" = 1'-0"

1

S5.01

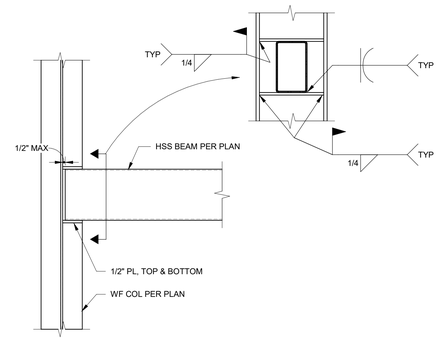

SECTION

1" = 1'-0"

C

S5.01

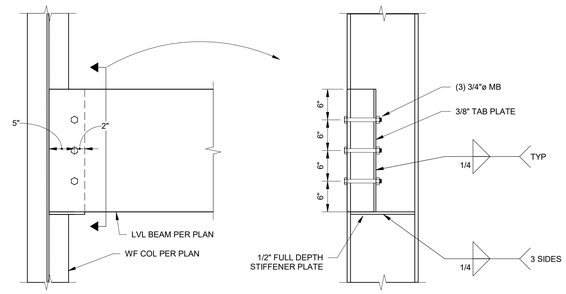

SECTION

1" = 1'-0"

D

S5.01

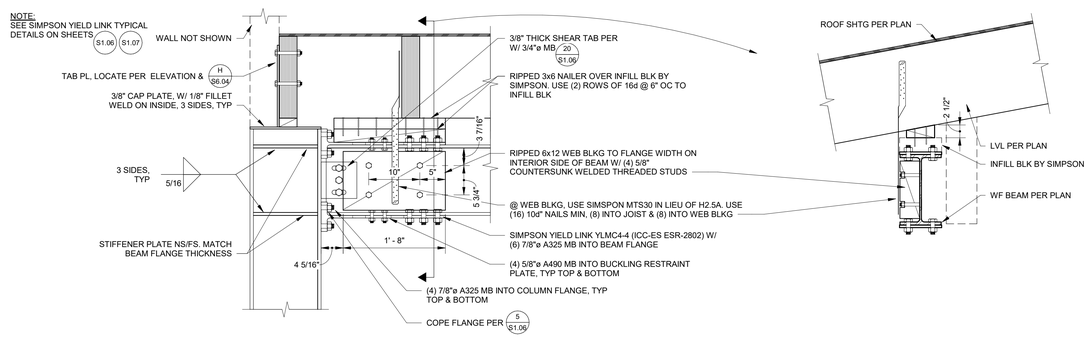

SECTION

1" = 1'-0"

A

S5.01

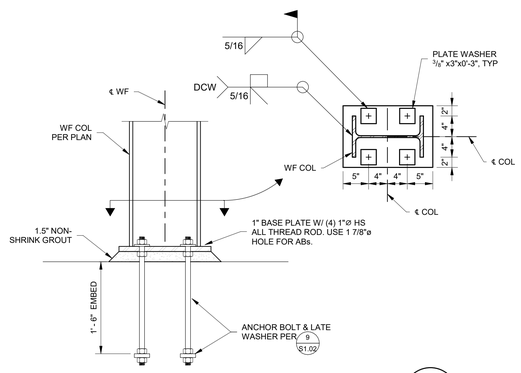

SECTION

1" = 1'-0"

B

S5.01

DSA STAMP

IDENTIFICATION STAMP
DIV. OF THE STATE ARCHITECT
APP: 02-123307 INC:
REVIEWED FOR
SS ☑ FLS ☑ ACS ☑
DATE: 10/15/2025

CORNERSTONE structural engineering group
986 W. Alluvial Avenue, Suite 201
Fresno, California 93711
559.320.3200
fax 559.320.3201

Owner:

WASHINGTON UNIFIED SCHOOL DISTRICT

6041 SOUTH ELM AVE
FRESNO, CA 93706

Project Name:

STUDENT SERVICES

Project Address:

WASHINGTON UNION HIGH SCHOOL

6041 SOUTH ELM AVE,
FRESNO, CA 93706

integrated designs
by SOMAM, Inc.

ARCHITECTURE
ENGINEERING
INTERIOR DESIGN

6011 N. FRESNO STREET, SUITE 130
FRESNO CALIFORNIA 93710
P:(559) 436-0881 F:(559) 436-0887
E: design@somam.com
integrateddesigns.com

Ownership of Documents

This document, the ideas and designs incorporated herein, as an instrument of Professional Service is the property of Integrated Designs by SOMAM Inc. and is not to be used, in whole or in part for any other project without written authorization.

© COPYRIGHT 2022

Stamp:

REGISTERED PROFESSIONAL ENGINEER
DUSTIN G. LEE
No. 35603
EXP. 3/31/27
STRUCTURAL
STATE OF CALIFORNIA

Sheet Title:

MOMENT FRAME ELEVATION

Job No.:

5613

Sheet No.:

S5.01

Release: Date:

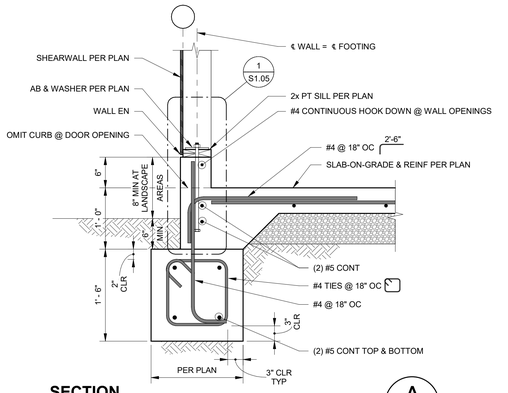

SECTION 1" = 1'-0" — A S6.01

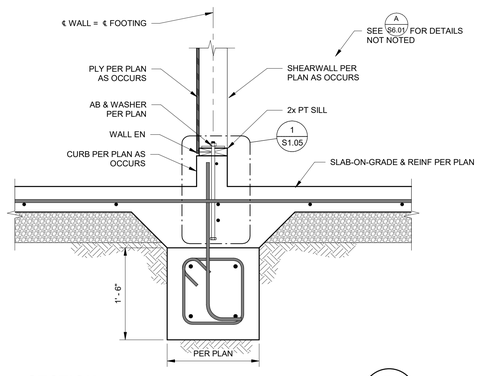

SECTION 1" = 1'-0" — B S6.01

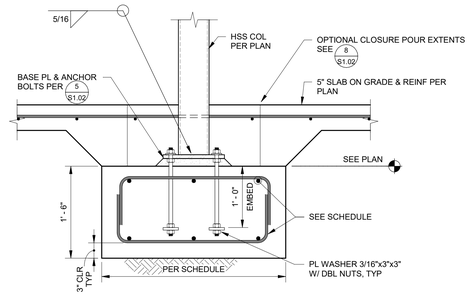

SECTION 1" = 1'-0" — C S6.01

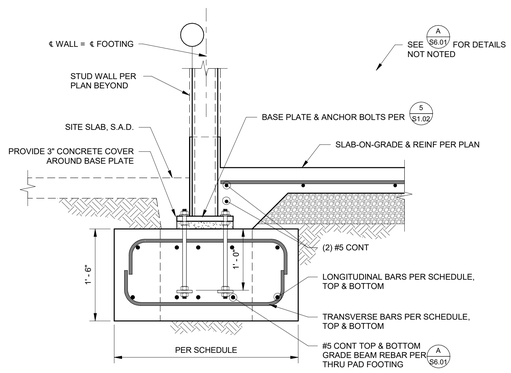

SECTION 1" = 1'-0" — D S6.01

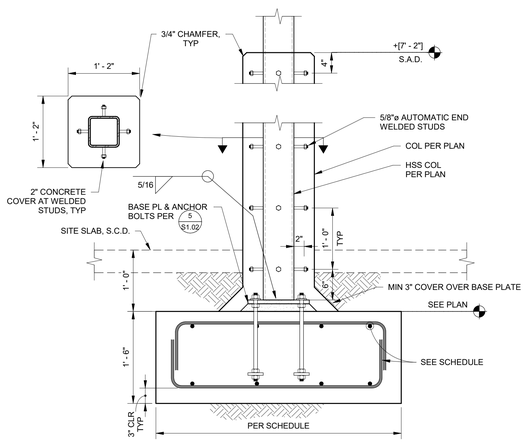

SECTION 1" = 1'-0" — E S6.01

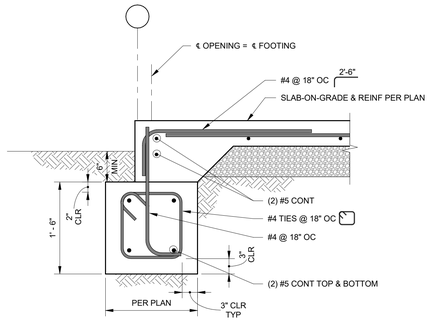

SECTION 1" = 1'-0" — F S6.01

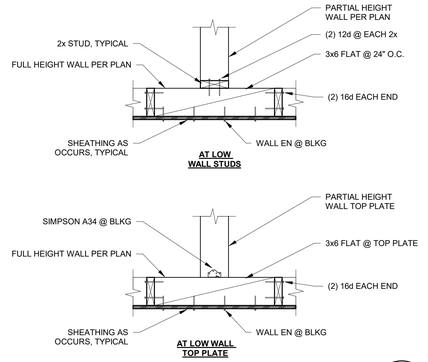

SECTION 1" = 1'-0" — G S6.01

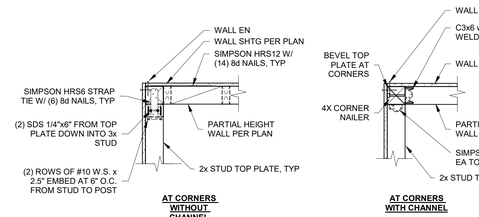

SECTION 1" = 1'-0" — J S6.01

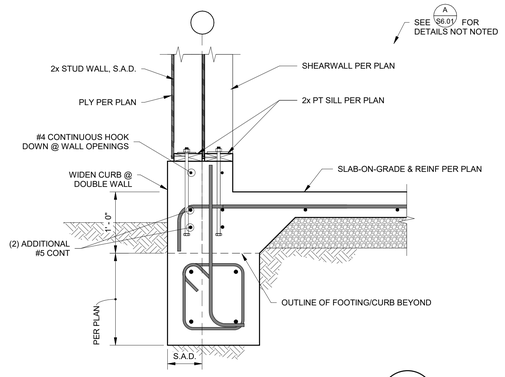

SECTION 1" = 1'-0" — K S6.01

DSA STAMP

IDENTIFICATION STAMP
DIV. OF THE STATE ARCHITECT
APP: 02-123307 INC:
REVIEWED FOR
SS ☑ FLS ☑ ACS ☑
DATE: 10/15/2025

CORNERSTONE structural engineering group
986 W. Alluvial Avenue, Suite 201
Fresno, California 93711
559.320.3200
fax 559.320.3201

Owner:

WASHINGTON UNIFIED SCHOOL DISTRICT
6041 SOUTH ELM AVE
FRESNO, CA 93706

Project Name:

STUDENT SERVICES

Project Address:

WASHINGTON UNION HIGH SCHOOL
6041 SOUTH ELM AVE,
FRESNO, CA 93706

integrated designs
by SOMAM, Inc.

ARCHITECTURE
ENGINEERING
INTERIOR DESIGN

6011 N. FRESNO STREET, SUITE 130
FRESNO CALIFORNIA 93710
P:(559) 436-0881 F:(559) 436-0887
E: design@somam.com
integrateddesigns.com

Ownership of Documents
This document, the ideas and designs incorporated herein, as an instrument of Professional Service is the property of Integrated Designs by SOMAM Inc. and is not to be used, in whole or in part for any other project without written authorization.
© COPYRIGHT 2022

Stamp:

REGISTERED PROFESSIONAL ENGINEER — DUSTIN G. LEE — No. 28623 — EXP. 3/31/27 — STRUCTURAL — STATE OF CALIFORNIA

Sheet Title:

FOUNDATION DETAILS

Job No.: **5613**

Sheet No.: **S6.01**

Release: Date:

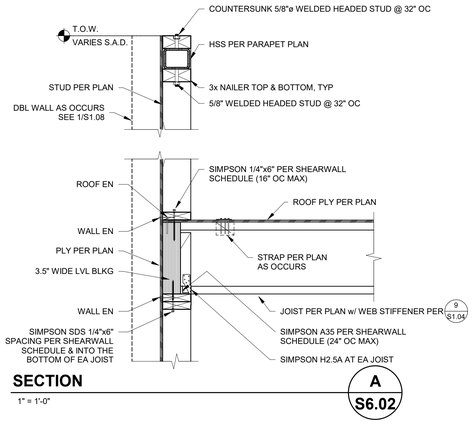

SECTION A — S6.02
1" = 1'-0"

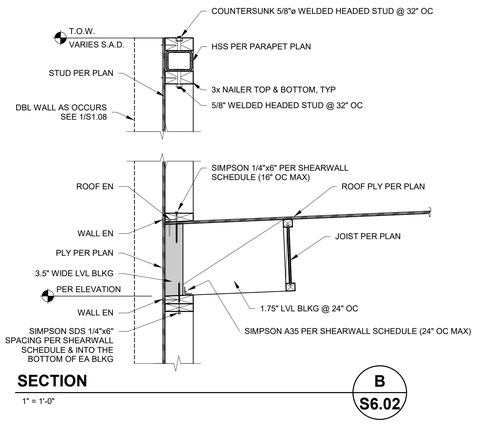

SECTION B — S6.02
1" = 1'-0"

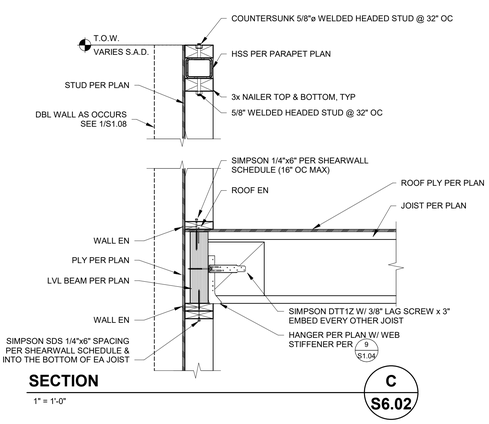

SECTION C — S6.02
1" = 1'-0"

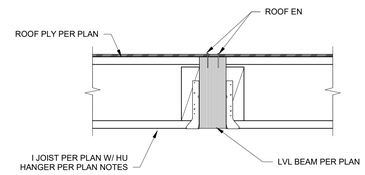

SECTION D — S6.02
1" = 1'-0"

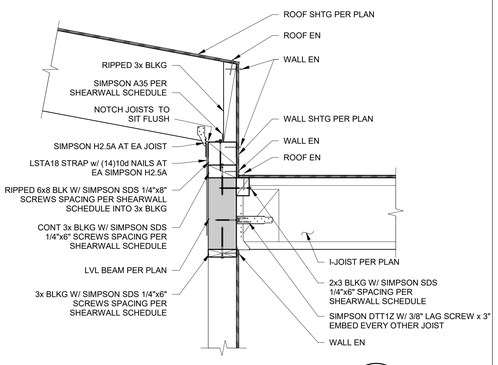

SECTION E — S6.02
1" = 1'-0"

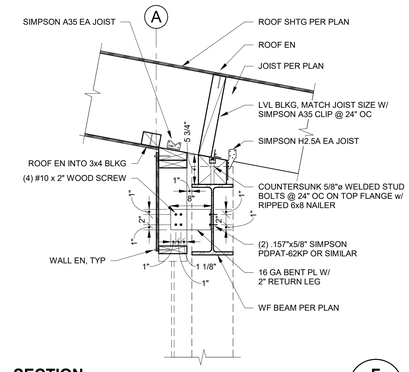

SECTION F — S6.02
1" = 1'-0"

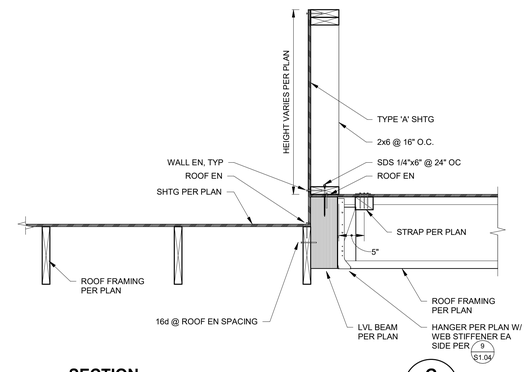

SECTION G — S6.02
1" = 1'-0"

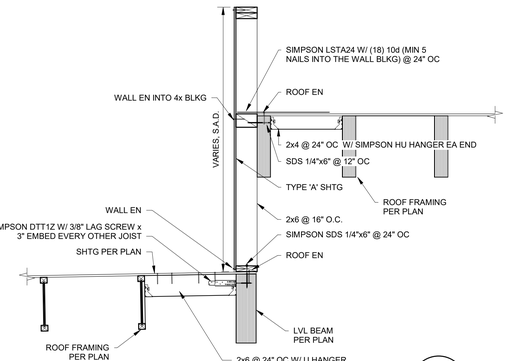

SECTION H — S6.02
3/4" = 1'-0"

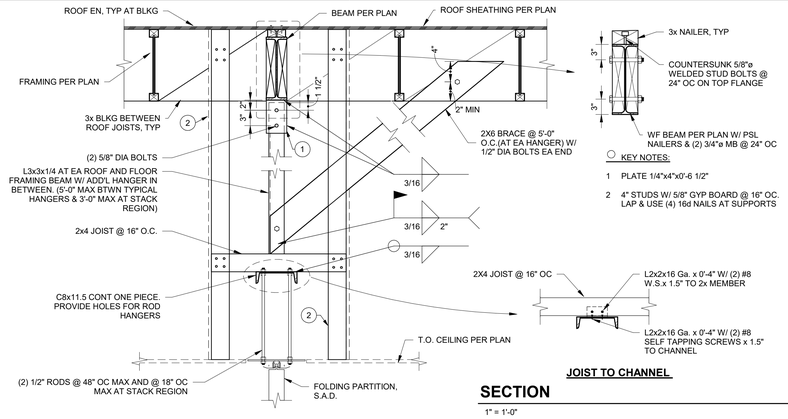

SECTION J — S6.02
1" = 1'-0"

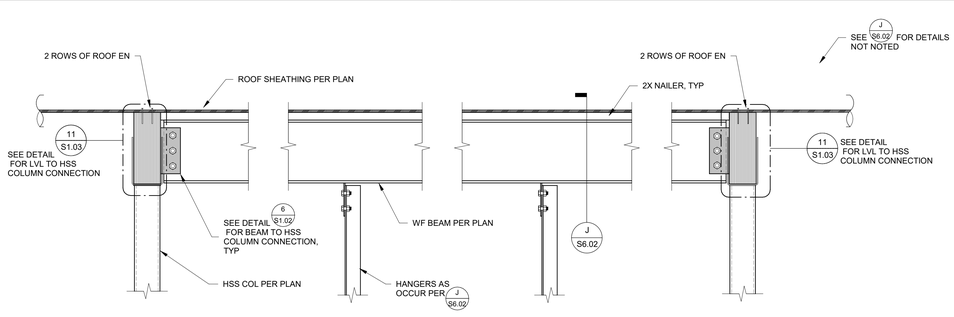

DETAIL K — S6.02
1" = 1'-0"

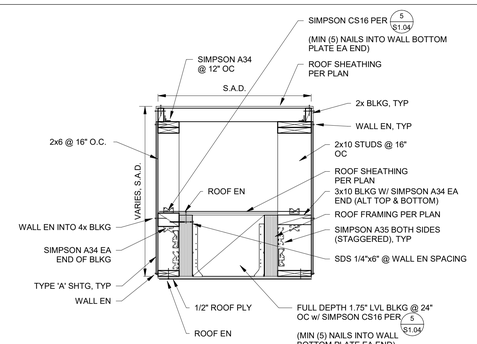

SECTION L — S6.02
3/4" = 1'-0"

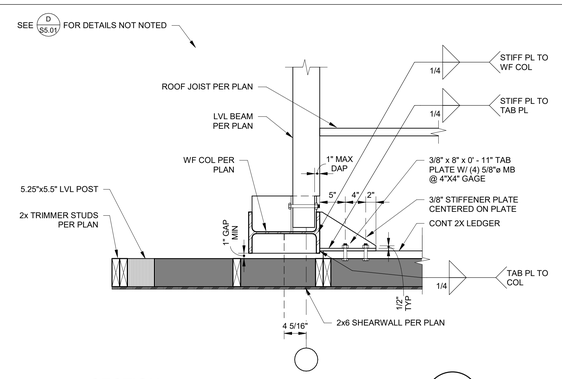

SECTION M — S6.02
1" = 1'-0"

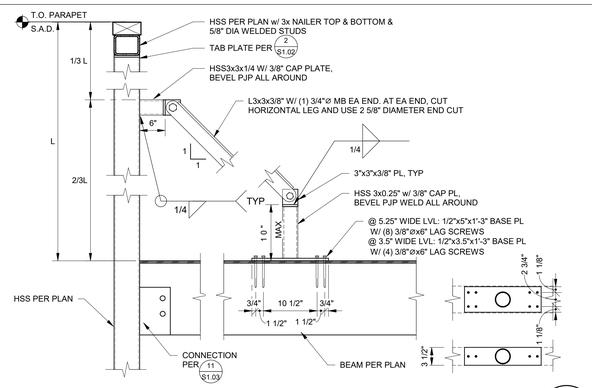

SECTION N — S6.02
1" = 1'-0"

DSA STAMP
IDENTIFICATION STAMP
DIV. OF THE STATE ARCHITECT
APP: 02-123307 INC:
REVIEWED FOR
SS ☑ FLS ☑ ACS ☑
DATE: 10/15/2025

CORNERSTONE structural engineering group
986 W. Alluvial Avenue, Suite 201
Fresno, California 93711
559.320.3200
fax 559.320.3201

Owner:
WASHINGTON UNIFIED SCHOOL DISTRICT

WASHINGTON UNIFIED SCHOOL DISTRICT
6041 SOUTH ELM AVE
FRESNO, CA 93706

Project Name:
STUDENT SERVICES

Project Address:
WASHINGTON UNION HIGH SCHOOL
6041 SOUTH ELM AVE,
FRESNO, CA 93706

integrated designs
by SOMAM, Inc.

ARCHITECTURE
ENGINEERING
INTERIOR DESIGN

6011 N. FRESNO STREET, SUITE 130
FRESNO CALIFORNIA 93710
P:(559) 436-0881 F:(559) 436-0887
E: design@somam.com
integrateddesigns.com

Ownership of Documents
This document, the ideas and designs incorporated herein, as an instrument of Professional Service is the property of Integrated Design by SOMAM Inc. and is not to be used, in whole or in part for any other project without written authorization.
© COPYRIGHT 2022

Stamp:
REGISTERED PROFESSIONAL ENGINEER DUSTIN G. LEE No. 39503 EXP. 3/31/27 STRUCTURAL STATE OF CALIFORNIA

Sheet Title:
ROOF FRAMING DETAILS No. 1

Job No.:
5613

Sheet No.:
S6.02

Release: Date:

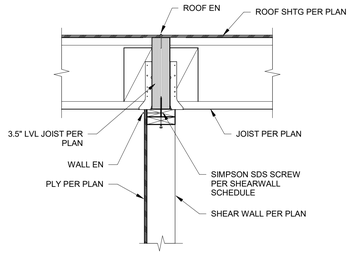

SECTION A — S6.03
1" = 1'-0"

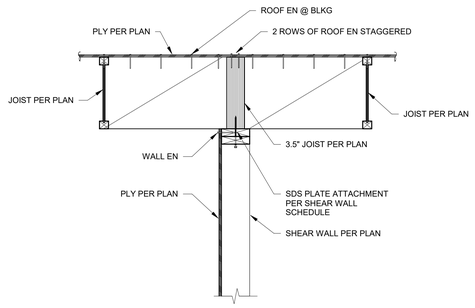

SECTION B — S6.03
1" = 1'-0"

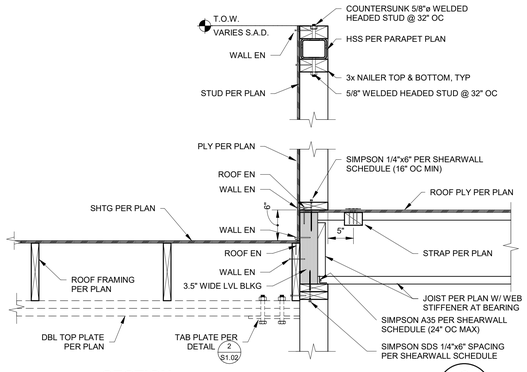

SECTION C — S6.03
1" = 1'-0"

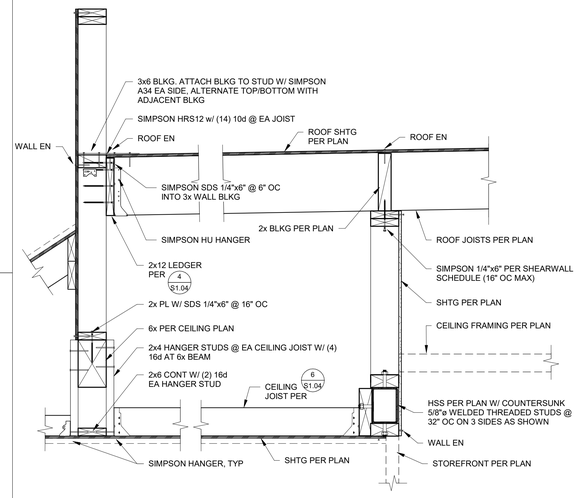

SECTION G — S6.03
1" = 1'-0"

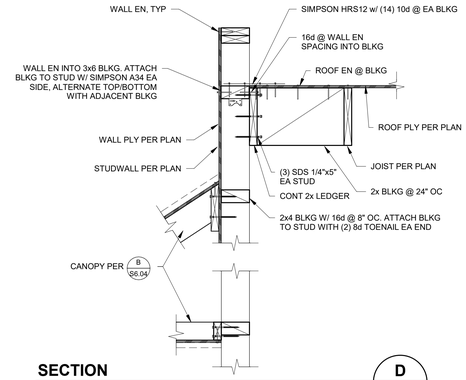

SECTION D — S6.03
1" = 1'-0"

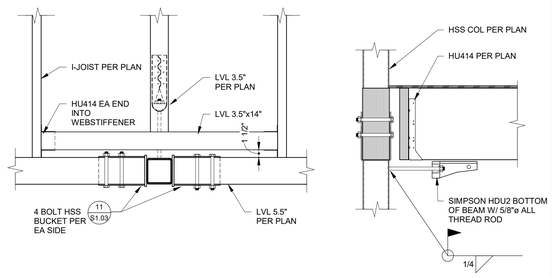

SECTION E — S6.03
1" = 1'-0"

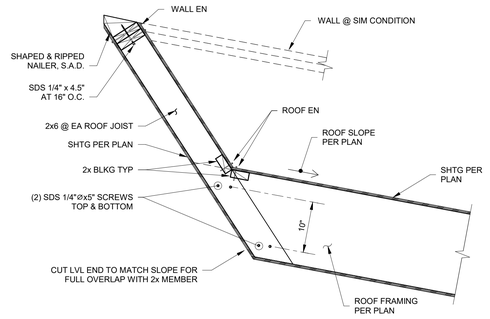

SECTION F — S6.03
1" = 1'-0"

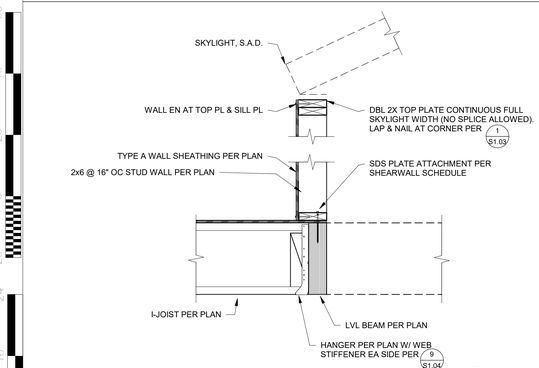

SECTION H — S6.03
1" = 1'-0"

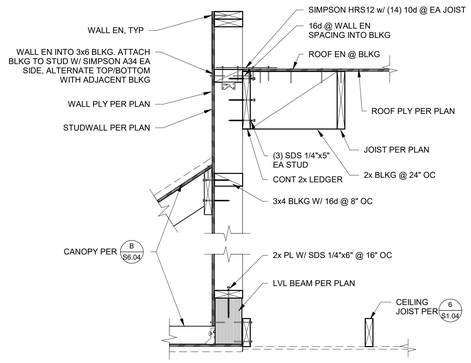

SECTION J — S6.03
1" = 1'-0"

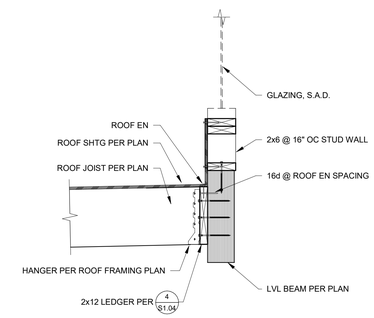

SECTION K — S6.03
1" = 1'-0"

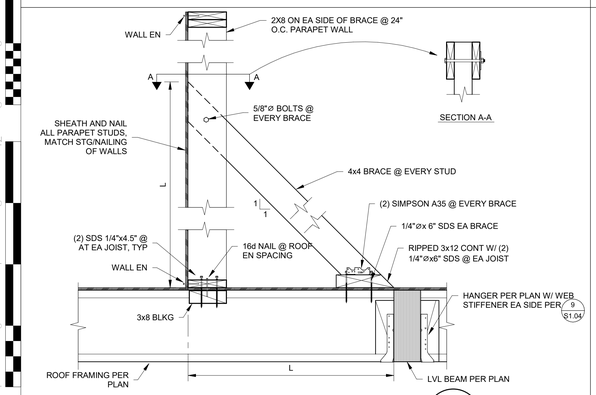

SECTION M — S6.03
1" = 1'-0"

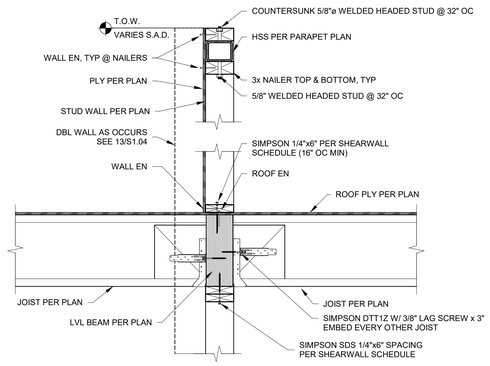

SECTION N — S6.03
1" = 1'-0"

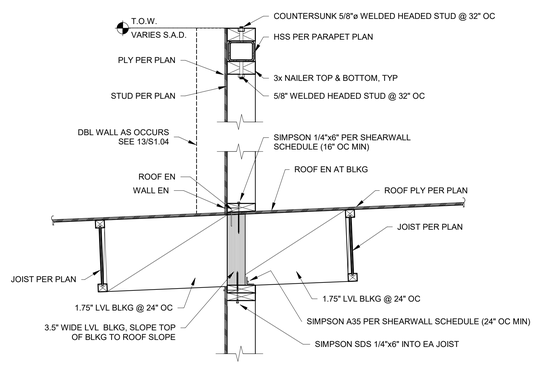

SECTION P — S6.03
1" = 1'-0"

DSA STAMP
IDENTIFICATION STAMP
DIV. OF THE STATE ARCHITECT
APP: 02-123307 INC:
REVIEWED FOR
SS ☑ FLS ☑ ACS ☑
DATE: 10/15/2025

CORNERSTONE structural engineering group
986 W. Alluvial Avenue, Suite 201
Fresno, California 93711
559.320.3200
fax 559.320.3201

Owner:

WASHINGTON UNIFIED SCHOOL DISTRICT
6041 SOUTH ELM AVE
FRESNO, CA 93706

Project Name:

STUDENT SERVICES

Project Address:

WASHINGTON UNION HIGH SCHOOL
6041 SOUTH ELM AVE,
FRESNO, CA 93706

integrated designs
by SOMAM, Inc.

ARCHITECTURE ENGINEERING INTERIOR DESIGN

6011 N. FRESNO STREET, SUITE 130
FRESNO CALIFORNIA 93710
P:(559) 436-0881 F:(559) 436-0887
E: design@somam.com
integrateddesigns.com

Ownership of Documents
This document, the ideas and designs incorporated herein, as an instrument of Professional Service is the property of Integrated Designs by SOMAM Inc. and is not to be used, in whole or in part for any other project without written authorization.
© COPYRIGHT 2022

Stamp:

REGISTERED PROFESSIONAL ENGINEER — JUSTIN G. LEE — No. 39603 — EXP. 3/31/27 — STRUCTURAL — STATE OF CALIFORNIA

Sheet Title:

ROOF FRAMING DETAILS No. 2

Job No.: **5613**

Sheet No.: **S6.03**

Release: Date:

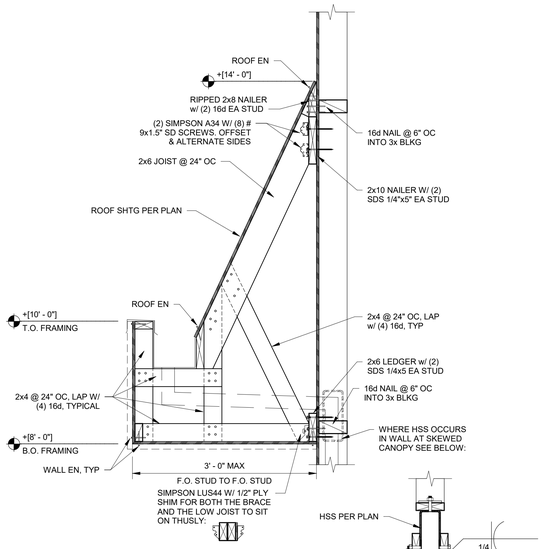

SECTION A
1" = 1'-0" — S6.04

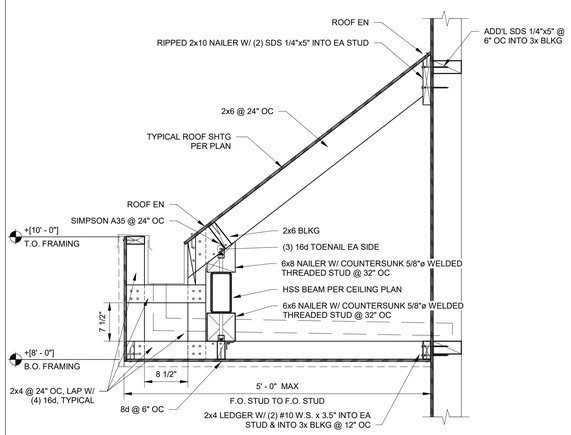

SECTION B
1" = 1'-0" — S6.04

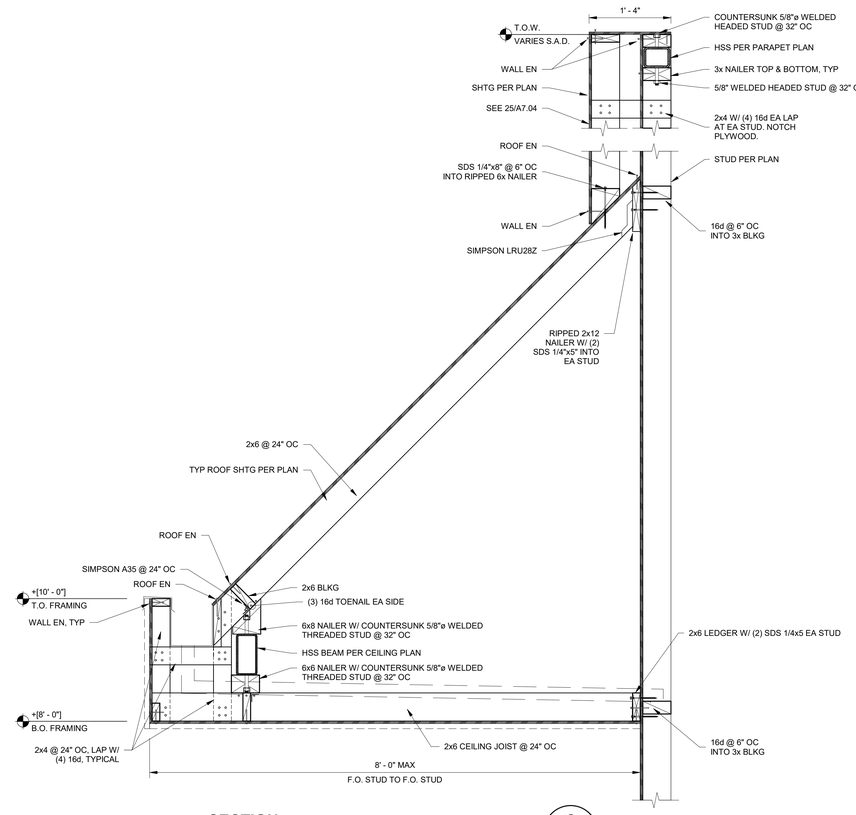

SECTION C
1" = 1'-0" — S6.04

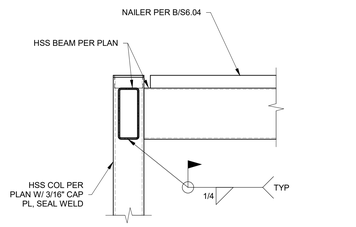

SECTION D
1" = 1'-0" — S6.04

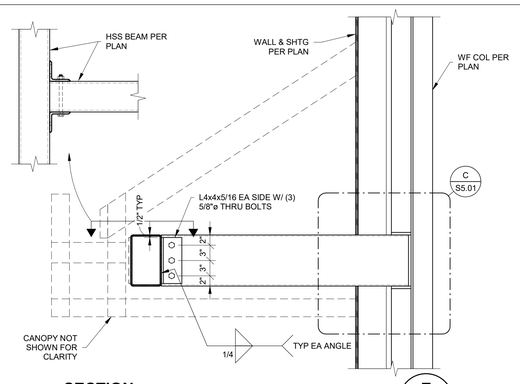

SECTION E
1" = 1'-0" — S6.04

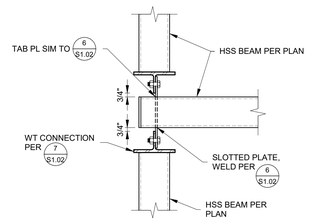

DETAIL F
1" = 1'-0" — S6.04

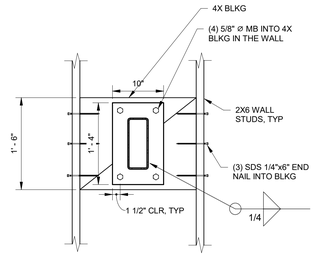

DETAIL G
1" = 1'-0" — S6.04

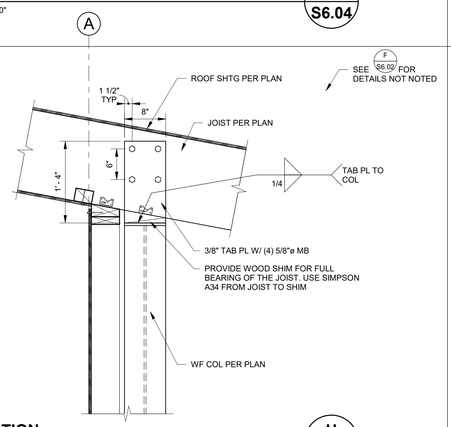

SECTION H
1" = 1'-0" — S6.04

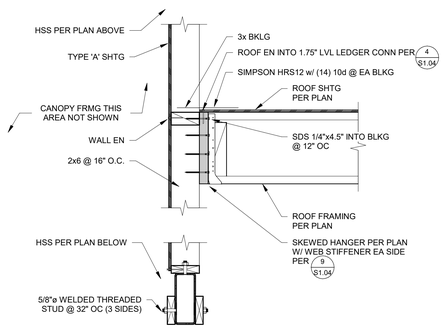

SECTION J
1" = 1'-0" — S6.04

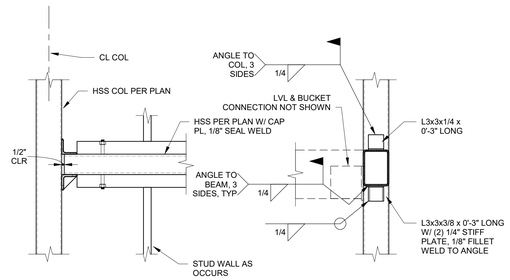

SECTION K
1" = 1'-0" — S6.04

DSA STAMP
IDENTIFICATION STAMP
DIV. OF THE STATE ARCHITECT
APP: 02-123307 INC:
REVIEWED FOR
SS ☑ FLS ☑ ACS ☑
DATE: 10/15/2025

CORNERSTONE structural engineering group
986 W. Alluvial Avenue, Suite 201
Fresno, California 93711
559.320.3200
fax 559.320.3201

Owner:

WASHINGTON UNIFIED SCHOOL DISTRICT

6041 SOUTH ELM AVE
FRESNO, CA 93706

Project Name:

STUDENT SERVICES

Project Address:

WASHINGTON UNION HIGH SCHOOL

6041 SOUTH ELM AVE,
FRESNO, CA 93706

integrated designs
by SOMAM, Inc.

ARCHITECTURE
ENGINEERING
INTERIOR DESIGN

6011 N. FRESNO STREET, SUITE 130
FRESNO CALIFORNIA 93710
P:(559) 436-0881 F:(559) 436-0887
E: design@somam.com
integrateddesigns.com

Ownership of Documents
This document, the ideas and designs incorporated herein, as an instrument of Professional Service is the property of Integrated Design by SOMAM Inc. and is not to be used, in whole or in part for any other project without written authorization.
© COPYRIGHT 2022

Stamp:

REGISTERED PROFESSIONAL ENGINEER
JUSTIN G. LEE
No. 29603
EXP. 3/31/27
STRUCTURAL
STATE OF CALIFORNIA

Sheet Title:

ROOF FRAMING DETAILS No. 3

Job No.: **5613**

Sheet No.: **S6.04**

Release: Date:

GENERAL NOTES:

1. COORDINATION OF WORK: LAYOUT OF MATERIALS, EQUIPMENT AND SYSTEMS ARE GENERALLY DIAGRAMMATIC UNLESS SPECIFICALLY DIMENSIONED. SOME OF THE WORK MAY BE SHOWN OFFSET FOR CLARITY. THE ACTUAL LOCATION OF ALL MATERIALS, PIPING, DUCTWORK, FIXTURES, EQUIPMENT, SUPPORT, ETC. ALL DUCT AND PIPE ELBOWS AND ELEVATIONS ARE NOT SHOWN. CONTRACTOR TO ENSURE BID COVERS ELEVATION CHANGES TO INTERFERENCE WITH OTHER UTILITIES. ALL WORK SHALL BE CAREFULLY PLANNED PRIOR TO INSTALLATION OF ANY WORK TO AVOID ALL INTERFERENCES WITH EACH OTHER, OR WITH STRUCTURAL, ELECTRICAL, ARCHITECTURAL OR OTHER ELEMENTS. VERIFY THE PROPER VOLTAGE AND PHASE FOR ALL EQUIPMENT WITH THE ELECTRICAL PLANS. ALL CONFLICTS SHALL BE CALLED TO THE ATTENTION OF THE ARCHITECT AND ENGINEER PRIOR TO THE INSTALLATION OF ANY WORK OR ORDERING OF ANY EQUIPMENT.
2. CUTTING, BORING, SAW CUTTING OR DRILLING THROUGH THE NEW OR EXISTING STRUCTURAL ELEMENTS TO BE DONE ONLY WHEN SO DETAILED IN THE DRAWINGS OR ACCEPTED BY THE ARCHITECT AND STRUCTURAL ENGINEER WITH THE APPROVAL OF THE DSA REPRESENTATIVE OR AUTHORITY HAVING JURISDICTION.

TITLE 24 MECHANICAL & PLUMBING REQUIREMENTS:

1. ALL AIR COOLED HVAC UNITS SHALL HAVE MINIMUM EFFICIENCIES PER TABLE 110.2-A.
2. ALL FURNACES SHALL HAVE MINIMUM EFFICIENCIES PER TABLE 110.2-J.
3. ALL FURNACES SHALL HAVE STAND BY LOSS CONTROLS PER SECTION 110.2 (d).
4. ALL THERMOSTATS SHALL COMPLY WITH 110 (b) OR (c) AS APPLICABLE
5. ALL HVAC SYSTEMS SHALL HAVE OUTSIDE (VENTILATION) AIR PER 120.1 (b) 2. ALSO SEE MECHANICAL PLANS FOR MINIMUM OUTSIDE AIR SETTINGS.
6. WHEN CO_2 VENTILATION DEMAND CONTROLS ARE SPECIFIED, PROVIDE IN ACCORDANCE WITH 120.1 C.
7. MINIMUM VENTILATION RATES SHALL BE INITIATED ONE HOUR PRIOR TO SCHEDULED OCCUPANCY PER 120.1 (c) 2.
8. EACH HVAC SYSTEM SHALL HAVE SHUT-OFF AND RESET CONTROLS COMPLYING WITH 120.2 (e).
9. ALL OUTSIDE AND EXHAUST DAMPERS SHALL AUTOMATICALLY CLOSE PER 120.2 (h).
10. ALL SYSTEMS GREATER THAN A NOMINAL 54 MBH COOLING CAPACITY SHALL HAVE ECONOMIZERS EQUIPPED WITH FAULT DETECTION AND DIAGNOSTICS PER 120.2 (i).
11. ALL DUCTWORK INSULATION SHALL COMPLY WITH 120.4
12. SET UP ALL THERMOSTATS WITH A DEAD BAND OF NO LESS THAN (3) DEGREES TO PREVENT CYCLING BETWEEN HEATING AND COOLING.
13. ACCEPTANCE TESTS REQUIRED PRIOR TO GRANTING OCCUPANCY.
    - OUTDOOR AIR VENTILATION SYSTEMS PER NA 7.5.1.
    - CONSTANT VOLUME SINGLE ZONE SYSTEM CONTROLS PER NA 7.5.2.
    - AIR ECONOMIZERS PER NA 7.5.4
    - DEMAND CONTROL (CO_2) CONTROLS, WHEN REQUIRED, PER NA 7.5.5.
    - FAULT DETECTION & DIAGNOSTICS (FDD) PER NA 7.5.11.

EQUIPMENT ANCHORAGE:

ALL MECHANICAL, PLUMBING, AND ELECTRICAL COMPONENTS SHALL BE ANCHORED AND INSTALLED PER THE DETAILS ON THE DSA APPROVED CONSTRUCTION DOCUMENTS. THE FOLLOWING COMPONENTS SHALL BE ANCHORED OR BRACED TO MEET THE FORCE AND DISPLACEMENTS REQUIREMENTS PRESCRIBED IN THE 2022 CBC SECTIONS 1617A.1.18 THROUGH 1617A.1.26 AND ASCE 7-16 CHAPTERS 13, 26, AND 30:

1. ALL PERMANENT EQUIPMENT AND COMPONENTS.
2. TEMPORARY, MOVABLE OR MOBILE EQUIPMENT THAT IS PERMANENTLY ATTACHED (E.G. HARD WIRED) TO THE BUILDING UTILITY SERVICES SUCH AS ELECTRICITY, GAS OR WATER. "PERMANENTLY ATTACHED" SHALL INCLUDE ALL ELECTRICAL CONNECTIONS EXCEPT PLUGS FOR 110/220 VOLTS RECEPTACLES HAVING A FLEXIBLE CABLE.
3. TEMPORARY, MOVABLE OR MOBILE EQUIPMENT WHICH IS HEAVIER THAN 400 POUNDS OR HAS A CENTER OF MASS LOCATED 4 FEET OR MORE ABOVE THE ADJACENT FLOOR OR ROOF LEVEL THAT DIRECTLY SUPPORT THE COMPONENT IS REQUIRED TO BE RESTRAINED IN A MANNER APPROVED BY DSA.

THE FOLLOWING MECHANICAL AND ELECTRICAL COMPONENTS SHALL BE POSITIVELY ATTACHED TO THE STRUCTURE BUT NEED NOT DEMONSTRATE DESIGN COMPLIANCE WITH THE REFERENCE NOTED ABOVE. THESE COMPONENTS SHALL HAVE FLEXIBLE CONNECTIONS PROVIDED BETWEEN THE COMPONENT AND ASSOCIATED DUCTWORK, PIPING, AND CONDUIT. FLEXIBLE CONNECTIONS MUST ALLOW MOVEMENT IN BOTH TRANSVERSE AND LONGITUDINAL DIRECTIONS:

A. COMPONENTS WEIGHING LESS THAN 400 POUNDS AND HAVING A CENTER OF MASS LOCATED 4 FEET OR LESS ABOVE THE ADJACENT FLOOR OR ROOF LEVEL THAT DIRECTLY SUPPORT THE COMPONENT.

B. COMPONENT WEIGHING LESS THAN 20 POUNDS, OR IN THE CASE OF DISTRIBUTED SYSTEMS, LESS THAN 5 POUNDS PER FOOT, WHICH ARE SUSPENDED FROM A ROOF OR FLOOR OR HUNG FROM A WALL.

THE ANCHORAGE OF ALL MECHANICAL, ELECTRICAL AND PLUMBING COMPONENTS SHALL BE SUBJECT TO THE APPROVAL OF THE DESIGN PROFESSIONAL IN GENERAL RESPONSIBLE CHARGE OR STRUCTURAL ENGINEER DELEGATED RESPONSIBILITY AND ACCEPTANCE BY DSA. THE PROJECT INSPECTOR WILL VERIFY THAT ALL COMPONENT AND EQUIPMENT HAVE BEEN ANCHORED IN ACCORDANCE WITH THE ABOVE REQUIREMENTS.

PIPING, DUCTWORK, AND ELECTRICAL DISTRIBUTION SYSTEM BRACING NOTE:

PIPING, DUCTWORK, AND ELECTRICAL DISTRIBUTION SYSTEMS SHALL BE BRACED TO COMPLY WITH THE FORCES AND DISPLACEMENTS PRESCRIBED IN ASCE 7 SECTION 13.3 AS DEFINED IN ASCE 7 SECTIONS 13.6.5, 13.6.6, 13.6.7, AND 13.6.8; AND 2022 CBC, SECTIONS 1617A.1.24, 1617A.1.25 AND 1617A.1.26.

THE METHOD OF SHOWING BRACING AND ATTACHMENTS TO THE STRUCTURE FOR THE IDENTIFIED DISTRIBUTION SYSTEM ARE AS NOTED BELOW. THE MEP DESIGN PROFESSIONAL ENGINEER RESPONSIBLE FOR CONTENT ON THESE SHEETS HAS VERIFIED THAT THE DESIGN METHODS IDENTIFIED BELOW ARE IN ACCORDANCE WITH DSA IR 16-13.

MECHANICAL PIPING (MP), MECHANICAL DUCTS (MD), PLUMBING PIPING (PP), ELECTRICAL DISTRIBUTION SYSTEMS (E):

MP____ MD____ PP_X_ E____ OPTION 1: PROJECT-SPECIFIC DESIGN.
MP____ MD____ PP____ E____ OPTION 2: DESIGN BASED ON OSHPD OPM, WITHIN PROJECT SUBMITTAL.
MP____ MD____ PP____ E____ OPTION 3: DESIGN BASED ON OSHPD OPM, DEFERRED SUBMITTAL.

PIPING MATERIALS:

1. SANITARY SEWER AND VENT PIPING BELOW GROUND: JOHNS-MANVILLE RING-TITE OR EQUIVALENT, POLYVINYL CHLORIDE (PVC) GRAVITY PIPE, WHERE PERMITTED BY CODES.
2. SANITARY SEWER AND VENT PIPING ABOVE GROUND: COATED STANDARD WEIGHT CAST IRON PIPE AND FITTINGS, CISPI STANDARD 301 AND ASTM A-888. JOINTS SHALL BE "NO HUB" STAINLESS STEEL BAND, MECHANICALLY ASSEMBLED.
3. WATER PIPING ABOVE GROUND: HOT WATER, COLD WATER, AND FILTER WATER: TYPE 'L' COPPER WITH LEAD-FREE SOLDERED JOINTS.
4. DOMESTIC WATER BELOW GRADE, SLAB, PAVED AREAS: SCHEDULE 40 GALVANIZED MALLEABLE IRON 150 LB. FITTINGS. OR POLYVINYL CHLORIDE (PVC) PRESSURE RATED SCHEDULE 40, ASTM D 2241, WITH RUBBER RINGS, ASTM D 1869.
5. INSULATION OF DOMESTIC COLD WATER, HOT WATER SUPPLY AND RETURN, WASTE, AND CONDENSATE DRAIN PIPING: GLASS FIBER PIPE INSULATION WITH FACTORY APPLIED WHITE JACKET, J-M MICRO-LOK 750AP, 1 INCH THICK FOR PIPE SIZES 1 INCH AND SMALLER, AND 1-1/2" INCH THICK FOR PIPE SIZES 1-1/4" INCHES AND LARGER.

APPLICABLE CODES AND REGULATIONS:

CALIFORNIA CODE OF REGULATIONS (C.C.R.)
PART 1 - 2025 CALIFORNIA STANDARDS ADMINISTRATIVE CODE, TITLE 24, C.C.R.
PART 2 - 2022 CALIFORNIA BUILDING CODE (C.B.C.), TITLE 24, C.C.R. VOLUMES 1-3.
PART 3 - 2022 CALIFORNIA ELECTRICAL CODE, TITLE 24, C.C.R.
PART 4 - 2022 CALIFORNIA MECHANICAL CODE (C.M.C.), TITLE 24 C.C.R.
PART 5 - 2022 CALIFORNIA PLUMBING CODE (C.P.C.), TITLE 24, C.C.R.
PART 6 - 2022 CALIFORNIA ENERGY CODE, TITLE 24, C.C.R.
PART 9 - 2022 CALIFORNIA FIRE CODE, TITLE 24, C.C.R.

PLUMBING LEGEND

SYMBOL	ITEM	ABBR
———	SOIL OR WASTE	S or W
– – –	VENT	V
VTR	VENT THRU ROOF	
—— CW ——	DOMESTIC COLD WATER	CW
—— HW ——	DOMESTIC HOT WATER	HW
—— HWR ——	DOMESTIC HOT WATER RETURN	HWR
CD	CONDENSATE DRAIN	CD
	EXISTING PIPING	(E)
(E)	EXISTING	
(N)	NEW	
—— FW ——	FILTERED WATER	FW
	FLOOR CLEANOUT	FCO
	WALL CLEANOUT	WCO
	PIPING TURN UP	
	PIPING TURN DOWN	
	POINT OF CONNECTION	
	SHUT OFF VALVE BELOW GRADE	
	SHUT OFF VALVE	

PLUMBING FIXTURE AND EQUIPMENT SCHEDULE

TAG	FIXTURE	DESCRIPTION	HW	CW	VENT	WASTE/ SEWER
CP-1	CIRCULATION PUMP	BELL AND GOSSET NBF-22 103252LF IN-LINE WET ROTOR CIRCULATION PUMP FOR POTALE WATER SYSTEMS, LEAD FREE, MAX WORKING PRESSURE, 150PSI, 92WATTS, 0.80 FLA, 2940 RPM, 115V-1Ø, APPROX 10- LBS	3/4"			
BS-1	BREAKROOM SINK	ELKAY 'DAYTON D125221 DROP IN SINGLE BASIN STAINLESS STEEL KITCHEN SINK W/ CHICAGO FAUCTES 436 DECK MOUNTED 13" HIGH ARC KITCHEN FAUCET	1/2"	1/2"	2"	2"
DF-1	DRINKING FOUNTAIN W/ BOTTLE FILTER	HAWS ADA VANDAL-RESISTANT DUAL DRINKING FOUNTAIN AND BOTTLE FILLER BUDLE, MODELS #1119P		1/2"	2"	2"
DSN-1	DOWNSPOUT NOZZLE	JAY R. SMITH - FIGURE NUMBER 1770. CAST BRONZE NOZZLE AND FLANGE.				3"
DSN-2	DOWNSPOUT NOZZLE	JAY R. SMITH - FIGURE NUMBER 1770. CAST BRONZE NOZZLE AND FLANGE.				4"
HB-1	HOSE BIBB	WOODFORD MODEL 65 WALL MOUNTED EXTERIOR HOSE BIBB, FREEZESELESS WALL HYDRANTS WITH SINGLE. CHECK HOSE CONNECTION		3/4"		
L-1	LAVATORY (ADA)	KOHLER, K-2005 KINGSTON WALL-MOUNT BATHRROM SINK, VITREOUS CHINA. W/ KOHLER K-97094-4 HINT, CENTERSET BATHROOM SINK FAUCET, TWO HANDLES, 1.2 GPM, PREMIUM METAL . WITH ASSE 1070 COMPLIANT MIXING VALVE LEONARD 170A-LF MV-1. MOUNTED UNDER SINK	1/2"	1/2"	2"	2"
MS-1	MOP SINK	ZURN Z5950-D3 28 X 28 CAST IRON ENAMELED CORNER FLOOR SINK WITH ZURN Z843M1-XL FAUCET (OR CHICAGO FAUCET, OR T&S BRASS QUAL)	3/4"	3/4"	2"	3"
MV-1	MIXING VALVE	LEONARD LV-20-E-LF THERMOSTATIC MIXING VALVE ASSE 1017 COMPLIANT 1GPM MIN FLOW CAPACITY, LOCKING TEMPERATURE REGULATING HANDLE SET TO 125°F	3/4"	3/4"		
MV-2	POINT OF USE MIXING VALVE	LEONARD 170A-LF EXPOSED POINT OF USE MIXING VALVE, ASSE 1070 TO CONTROL DOWN TO 0.25GPM ECO-MIX CERTIFIED LEAD-FREE INTEGRAL INLET CHECKS AND STAINLESS STEEL SCREENS, TEMPERATURE REGULATING TO 110°F	1/2"	1/2"		
ROD-1	ROOF AND OVERFLOW DRAIN	JAY R. SMITH - COMBINATION ROOF AND OVERFLOW DRAIN, SERIES 148-Y03, CAST IRON, AND COATED TO PROTTECT AGAINST CORROSION				3"
ROD-2	ROOF AND OVERFLOW DRAIN	JAY R. SMITH - COMBINATION ROOF AND OVERFLOW DRAIN, SERIES 148-Y03, CAST IRON, AND COATED TO PROTTECT AGAINST CORROSION				4"
S-1	2 COMP SINK	KOHLER "VAULT" 33" K-3996-4, DOUBLE BASIN DROP IN STAINLESS STEEL KITCHEN SINK, WITH ELKAY LKGT4083LS 1.8 GPM KITCHEN FAUCET	1/2"	1/2"	2"	2"
WC-1	WATER CLOSET	KOHLER ELONGATED GROUND-MOUNTED "KINGSTON" #K-25076, (OR AMERICAN STANDARD OR ZURN EQUAL) 1.28 GPF. W/ KOHLER "MACH TRIPOINT" K-10TD00K10-CP TOUCHLESS TOILET FLUSHOMETER, DC-POWERED, 1.0 GPF W/ HIGH BACK PRESSURE VACUUM BREAKER		1"	2"	4"
WH-1	WATER HEATER	BRADFORD WHITE ELECTRIFLEX HD COMMERCIAL ELECTRIC WATER HEATER - CEHD50(A)12.3 3"CF - 50 GALS TANK, 12.5 KW INPUT, APPROX. 270 LBS, 100 GAL FIRST HOUR RATING WITH MV-2		1-1/2"		

PIPE SIZING SCHEDULE

COLD WATER				
SIZE (IN.)	FLOW (GPM)	FLUSH TANK (FU)	FLUSH VALVE (FU)	VELOCITY (FPS)
1/2	4.3	5	-	6.2
3/4	9	12	-	6.0
1	16	23	-	6.2
1 1/4	28	49	12	7.6
1 1/2	38	80	26	7.4
2	63	188	87	7.0
2 1/2	90	330	199	6.3

BASED ON CALIFORNIA PLUMBING CODE 2022 EDITION. MAX 8.0 FPS VELOCITY & ADJUSTED TO 3.0 PSIG PER 100 FT MAX PRESSURE DROP

FIXTURES	QTY	COLD WATER*		HOT WATER*		SEWER/WASTE/VENT**	
		WSFU (EACH)	WSFU (TOTAL)	WSFU (EACH)	WSFU (TOTAL)	DFU (EACH)	DFU (TOTAL)
WATER CLOSET	4	26.25	105	0	0	4	16
LAVATORY	4	1	4	0.75	3	1	4
2 COMP SINK	1	2	2	1.5	1.5	2	2
HOSE BIBS	1	2.5	2.5	0	0	0	0
HOSE BIBS	6	1	6	0	0	0	0
DRINKING FOUNTAIN	2	0.5	1	0	0	0.5	1
MOP SINK	1	3	3	2.25	2.25	3	3
BREAKROOM SINK	2	2	4	1.5	3	2	4
TOTAL			**127.5**		**9.75**		**30**

PER TABLE A 103.1.3, 2022 CALIFORNIA PLUMBING CODE
***PER TABLE 702.1, 2022 CALIFORNIA PLUMBING CODE*

INDEX:

P0.1 - PLUMBING GENERAL NOTES, LEGEND, AND SCHEDULES
P0.2 - PLUMBING DETAILS
P1.0 - PLUMBING FLOOR PLAN - WATER & CONDENSATE
P1.1 - PLUMBING FLOOR PLAN - WASTE & VENT
P1.2 - PLUMBING ROOF PLAN

PLUMBING GENERAL NOTES, LEGEND, AND SCHEDULES

SCALE: N.T.S.

IDENTIFICATION STAMP
DIV. OF THE STATE ARCHITECT
APP: 02-123307 INC:
REVIEWED FOR
SS ☑ FLS ☑ ACS ☑
DATE: 10/15/2025

Owner:
WASHINGTON UNIFIED SCHOOL DISTRICT
7950 SOUTH ELM AVENUE
FRESNO, CA 93706

Project Name:
STUDENT SERVICES

Project Address:
WASHINGTON UNION HIGH SCHOOL
6041SOUTH ELM AVENUE
FRESNO, CA 93706

integrated designs
by SOMAM, Inc.
ARCHITECTURE
ENGINEERING
INTERIOR DESIGN
6011 N. FRESNO STREET, SUITE 130
FRESNO CALIFORNIA 93710
P:(559) 436-0881 F:(559) 436-0887
E: design@somam.com
integrateddesigns.com

Ownership of Documents
This document, the ideas and designs incorporated herein, as an instrument of Professional Service is the property of Integrated Designs by SOMAM Inc. and is not to be used, in whole or in part for any other project without written authorization.
© COPYRIGHT 2020

Stamp:
REGISTERED PROFESSIONAL ENGINEER
JOELON D. CHUNG
No. M35784
Exp. 03-31-26
MECHANICAL
STATE OF CALIFORNIA

Sheet Title:
PLUMBING GENERAL NOTES, LEGEND, & SCHEDULES

Job No.: 5613

Sheet No.: P0.1

Release:

JNL MECHANICAL DESIGN
11156 BUSINESS ROUTE 41
SUITE #105B
MADERA, CA 93636

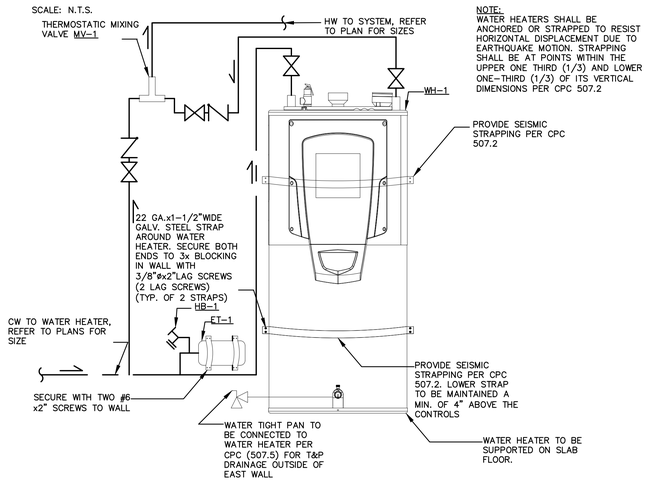

A WATER HEATER DETAIL

SCALE: N.T.S.

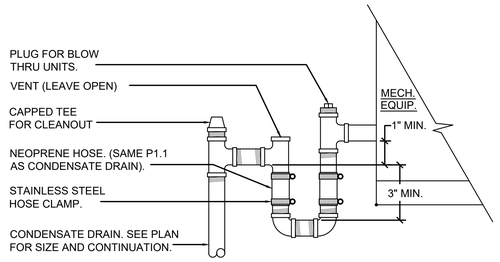

B CONDENSTAE DRAIN CONNECTON

SCALE: N.T.S.

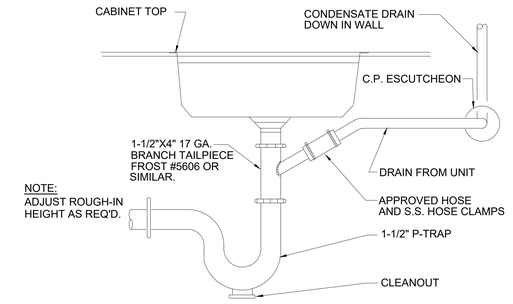

C CONDENSATE TO TAILPIECE DETAIL

SCALE: N.T.S.

System No.W-L-1001
June 15, 2005
F Ratings - 1, 2, 3 and 4 Hr (See Items 2 and 3)
T Ratings - 0, 1, 2, 3, and 4 Hr (See Item 3)
L Rating At Ambient - less than 1 CFM/sq ft
L Rating At 400 F - less than 1 CFM/sq ft

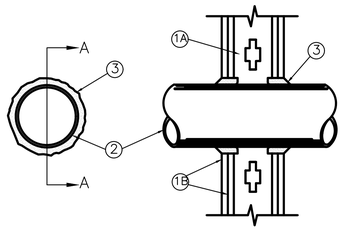

SECTION A–A

1. WALL ASSEMBLY - THE 1, 2, 3 OR 4 HR FIRE-RATED GYPSUM WALLBOARD/STUD WALL ASSEMBLY SHALL BE CONSTRUCTED OF THE MATERIALS AND IN THE MANNER DESCRIBED IN THE INDIVIDUAL U300 OR U400 SERIES WALL OR PARTITION DESIGNS IN THE UL FIRE RESISTANCE DIRECTORY AND SHALL INCLUDE THE FOLLOWING CONSTRUCTION FEATURES:

   A. STUDS - WALL FRAMING MAY CONSIST OF EITHER WOOD STUDS (MAX 2 HR FIRE RATED ASSEMBLIES) OR STEEL CHANNEL STUDS. WOOD STUDS TO CONSIST OF NOM 2 BY 4 IN. (51 BY 102 MM) LUMBER SPACED 16 IN. (406 MM) OC WITH NOM 2 BY 4 IN. (51 BY 102 MM) LUMBER END PLATES AND CROSS BRACES. STEEL STUDS TO BE MIN 3-5/8 IN. (92 MM) WIDE BY 1-3/8 IN. (35 MM) DEEP CHANNELS SPACED MAX 24 IN. (610 MM) OC.
   B. GYPSUM BOARD* - NOM 1/2 OR 5/8 IN. (13 OR 16 MM) THICK, 4 FT. (122 CM) WIDE WITH SQUARE OR TAPERED EDGES. THE GYPSUM WALLBOARD TYPE, THICKNESS, NUMBER OF LAYERS, FASTENER TYPE AND SHEET ORIENTATION SHALL BE AS SPECIFIED IN THE INDIVIDUAL U300 OR U400 SERIES DESIGN IN THE UL FIRE RESISTANCE DIRECTORY. MAX DIAM OF OPENING IS 26 IN. (660 MM).

2. THROUGH PENETRANT - ONE METALLIC PIPE, CONDUIT OR TUBING INSTALLED EITHER CONCENTRICALLY OR ECCENTRICALLY WITHIN THE FIRESTOP SYSTEM. THE ANNULAR SPACE BETWEEN PIPE, CONDUIT OR TUBING AND PERIPHERY OF OPENING SHALL BE MIN OF 0 IN. (0 MM) (POINT CONTACT) TO MAX 2 IN. (51 MM). PIPE, CONDUIT OR TUBING TO BE RIGIDLY SUPPORTED ON BOTH SIDES OF WALL ASSEMBLY. THE FOLLOWING TYPES AND SIZES OF METALLIC PIPES, CONDUITS OR TUBING MAY BE USED:
   A. STEEL PIPE - NOM 24 IN. (610 MM) DIAM (OR SMALLER) SCHEDULE 10 (OR HEAVIER) STEEL PIPE.
   B. IRON PIPE - NOM 24 IN. (610 MM) DIAM (OR SMALLER) SERVICE WEIGHT (OR HEAVIER) CAST IRON SOIL PIPE, NOM 12 IN. (305 MM) DIAM (OR SMALLER) OR CLASS 50 (OR HEAVIER) DUCTILE IRON PRESSURE PIPE.
   C. CONDUIT - NOM 6 IN. (152 MM) DIAM (OR SMALLER) STEEL CONDUIT OR NOM 4 IN. (102 MM) DIAM (OR SMALLER) STEEL ELECTRICAL METALLIC TUBING
   D. COPPER TUBING - NOM 6 IN. (152 MM) DIAM (OR SMALLER) TYPE L (OR HEAVIER) COPPER TUBING
   E. COPPER PIPE - NOM 6 IN. (152 MM) DIAM (OR SMALLER) REGULAR (OR HEAVIER) COPPER PIPE.
   F. THROUGH PENETRATING PRODUCT* - FLEXIBLE METAL PIPING - THE FOLLOWING TYPES OF STEEL FLEXIBLE METAL GAS PIPING MAY BE USED:

      1. NOM 2 IN. (51 MM) DIAM (OR SMALLER) STEEL FLEXIBLE METAL GAS PIPING. PLASTIC COVERING ON PIPING MAY OR MAY NOT BE REMOVED ON BOTH SIDES OF FLOOR OR WALL ASSEMBLY.

         OMEGA FLEX INC

      2. NOM 1 IN. (25 MM) DIAM (OR SMALLER) STEEL FLEXIBLE METAL GAS PIPING. PLASTIC COVERING ON PIPING MAY OR MAY NOT BE REMOVED ON BOTH SIDES OF FLOOR OR WALL ASSEMBLY.

         TITEFLEX CORP
         A BUNDY CO

      3. NOM 1 IN. (25 MM) DIAM (OR SMALLER) STEEL FLEXIBLE METAL GAS PIPING. PLASTIC COVERING ON PIPING MAY OR MAY NOT BE REMOVED ON BOTH SIDES OF FLOOR OR WALL ASSEMBLY.

         WARD MFG INC

3. FILL,VOID OR CAVITY MATERIAL* - CAULK OR SEALANT - MIN 5/8, 1-1/4,1-7/8 AND 2-1/2 IN. (16, 32, 48 AND 64 MM) THICKNESS OF CAULK FOR 1, 2, 3 AND 4 HR RATED ASSEMBLIES, RESPECTIVELY, APPLIED WITHIN ANNULUS, FLUSH WITH BOTH SURFACES OF WALL. MIN 1/4 IN. (6 MM) DIAM BEAD OF CAULK APPLIED TO GYPSUM BOARD/PENETRANT INTERFACE AT POINT CONTACT LOCATION ON BOTH SIDES OF WALL.
   THE HOURLY F RATING OF THE FIRESTOP SYSTEM IS DEPENDENT UPON THE HOURLY FIRE RATING OF THE WALL ASSEMBLY IN WHICH IT IS INSTALLED, AS SHOWN IN THE FOLLOWING TABLE.
   THE HOURLY T RATING OF THE FIRESTOP SYSTEM IS DEPENDENT UPON THE TYPE OR SIZE OF THE PIPE OR CONDUIT AND THE HOURLY FIRE RATING OF THE WALL ASSEMBLY IN WHICH IT IS INSTALLED, AS TABULATED BELOW:

MAX PIPE OR CONDUIT DIA. IN. (MM)	F RATING HR	T RATING HR
1 (25)	1 or 2	0+, 1 or 2
1 (25)	3 or 4	3 or 4
4 (102)	1 or 2	0
6 (152)	3 or 4	0
12 (305)	1 or 2	0

+WHEN COPPER PIPE IS USED, T RATING IS 0 HR.
3M COMPANY - CP 25WB+ CAULK OR FB-3000 WT SEALANT,
*BEARING THE UL CLASSIFICATION MARKING

D UNINSULATED PIPE FIRE STOPPING (HORIZONTAL)

SCALE: N.T.S.

PLUMBING DETAILS

SCALE: N.T.S.

1" = 50'-0" 150 100 50 0 50
1" = 40'-0" 120 80 40 0 40
1" = 30'-0" 90 60 30 0 30
1" = 20'-0" 60 40 20 0 20
1/8" = 1'-0" 24 16 8 0 8
1/4" = 1'-0" 12 8 4 0 4

IDENTIFICATION STAMP
DIV. OF THE STATE ARCHITECT
APP: 02-123307 INC:
REVIEWED FOR
SS ☑ FLS ☑ ACS ☑
DATE: 10/15/2025

Owner:
WASHINGTON UNIFIED SCHOOL DISTRICT

WASHINGTON UNIFIED SCHOOL DISTRICT
7950 SOUTH ELM AVENUE
FRESNO, CA 93706

Project Name:
STUDENT SERVICES

Project Address:
WASHINGTON UNION HIGH SCHOOL
6041SOUTH ELM AVENUE
FRESNO, CA 93706

integrated designs
by SOMAM, Inc.

ARCHITECTURE
ENGINEERING
INTERIOR DESIGN

6011 N. FRESNO STREET, SUITE 130
FRESNO CALIFORNIA 93710
P:(559) 436-0881 F:(559) 436-0887
E: design@somam.com
integrateddesigns.com

Ownership of Documents
This document, the ideas and designs incorporated herein, as an instrument of Professional Service is the property of Integrated Designs by SOMAM Inc. and is not to be used, in whole or in part for any other project without written authorization.
© COPYRIGHT 2020

Stamp:
REGISTERED PROFESSIONAL ENGINEER
JOELON D. CHUNG
No. M35784
Exp. 03-31-26
MECHANICAL
STATE OF CALIFORNIA

Sheet Title:
PLUMBING DETAILS

Job No.: 5613

Sheet No.: P0.2

Release:

JNL MECHANICAL DESIGN
11156 BUSINESS ROUTE 41
SUITE #105B
MADERA, CA 93636

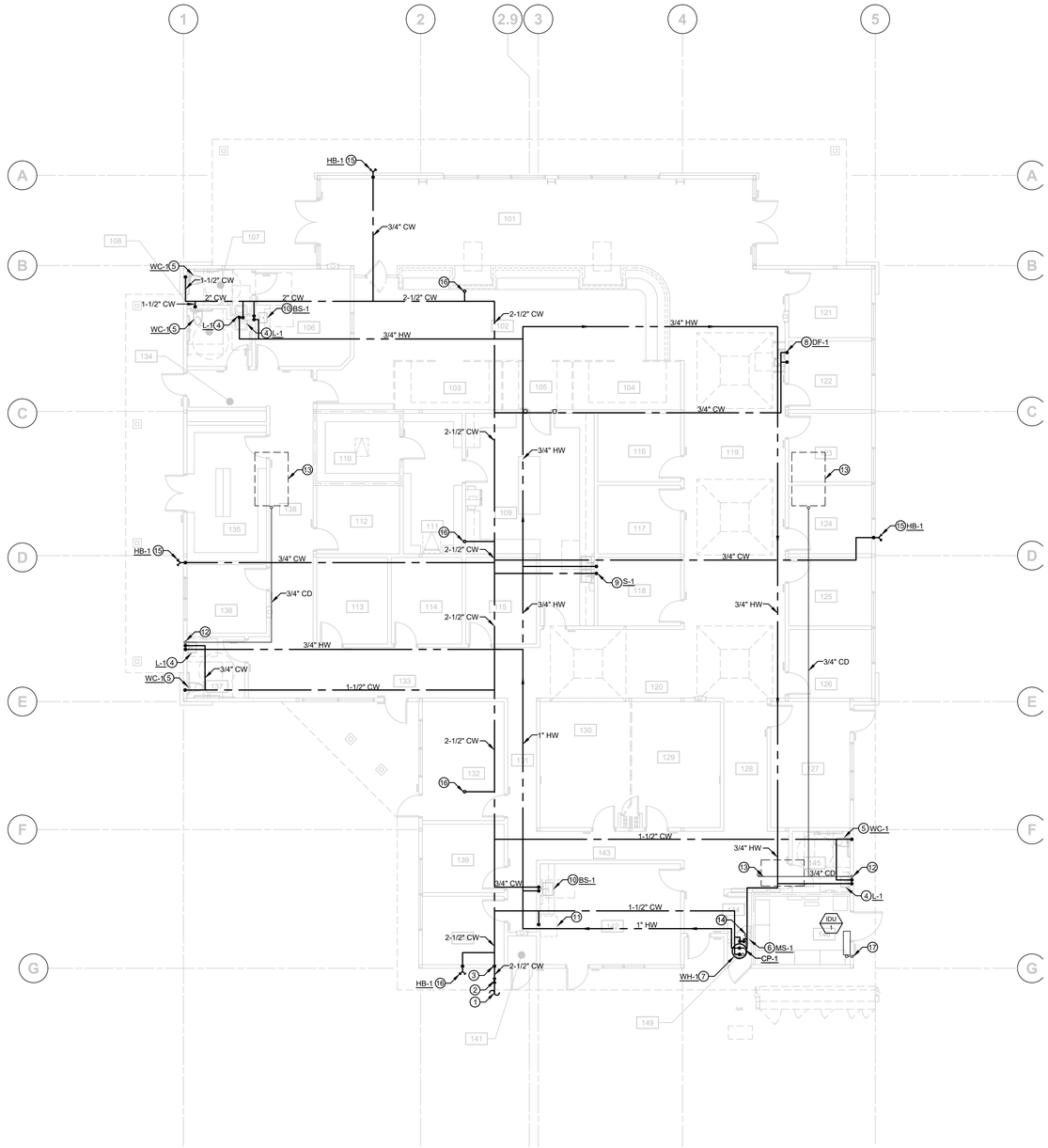

KEYNOTE(S):

1. CONNECT (N) CW LINE TO (E) MAIN CW LINE. REFER TO CIVIL FOR CONINTUATION
2. (N) MAIN CW SHUT-OFF VALVE BELOW GRADE
3. 2-1/2" CW RISER
4. 1/2"CW & 1/2"HW FOR LAVATORY, L-1
5. 1"CW FOR WATER CLOSET, WC-1
6. 3/4"CW & 3/4"HW FOR MOP SINK, MS-1
7. ELECTRIC TANK WATER HEATER TO BE INSTALLED PER DETAIL 'A'/P0.2.WH-1. 1" T&P AND DISCHARGE FROM WATER HEATER TO DISCHARGE INTO MOP SINK
8. 1/2"CW FOR DRINKING FOUNTAIN, DF-1
9. 1/2"CW & 1/2"HW FOR 2 COMP SINK, S-1
10. 1/2"CW & 1/2"HW FOR BREAK ROOM SINK, BS-1
11. 1/2"CW FOR ICE MAKER IN REFRIGERATOR.
12. 3/4"CD TO DRAIN INTO SINK PER DETAIL 'C'/P0.2
13. 3/4"CD FROM ROOF TOP UNITS, P1.2 FOR CONTINUATION
14. WATER HEATER 3/4"CD AND T&P VALVE TO BE DRAINED TO MOP SINK WITH 2" AIR GAP
15. 3/4"CW FOR HOSE BIB, HB-1.
16. 3/4"CW RISER FOR HOSE BIB ON THE ROOF, P1.2 FOR CONTINUATION
17. 3/4"CD FROM INDOOR UNIT TO BE DRAINED OUTDOORS 8" A.F.F.

PLUMBING FLOOR PLAN - WATER & CONDENSATE

SCALE: 1/8" = 1'-0"

1" = 50'-0" 150 100 50 0 50
1" = 40'-0" 120 80 40 0 40
1" = 30'-0" 90 60 30 0 30
1" = 20'-0" 60 40 20 0 20
1/8" = 1'-0" 24 16 8 0 8
1/4" = 1'-0" 12 8 4 0 4

IDENTIFICATION STAMP
DIV. OF THE STATE ARCHITECT
APP: 02-123307 INC:
REVIEWED FOR
SS ☑ FLS ☑ ACS ☑
DATE: 10/15/2025

Owner:
WASHINGTON UNIFIED SCHOOL DISTRICT

WASHINGTON UNIFIED SCHOOL DISTRICT
7950 SOUTH ELM AVENUE
FRESNO, CA 93706

Project Name:
STUDENT SERVICES

Project Address:
WASHINGTON UNION HIGH SCHOOL
6041SOUTH ELM AVENUE
FRESNO, CA 93706

integrated designs
by SOMAM, Inc.

ARCHITECTURE
ENGINEERING
INTERIOR DESIGN

6011 N. FRESNO STREET, SUITE 130
FRESNO CALIFORNIA 93710
P:(559) 436-0881 F:(559) 436-0887
E: design@somam.com
integrateddesigns.com

Ownership of Documents
This document, the ideas and designs incorporated herein, as an instrument of Professional Service is the property of Integrated Designs by SOMAM Inc. and is not to be used, in whole or in part for any other project without written authorization.
© COPYRIGHT 2020

Stamp:
REGISTERED PROFESSIONAL ENGINEER
JOELON D. CHUNN
No. M35784
Exp. 03-31-26
MECHANICAL
STATE OF CALIFORNIA

Sheet Title:
PLUMBING FLOOR PLAN - WATER & CONDENSATE

Job No.: 5613

Sheet No.: P1.0

Release:

JNL MECHANICAL DESIGN
11156 BUSINESS ROUTE 41
SUITE #105B
MADERA, CA 93636

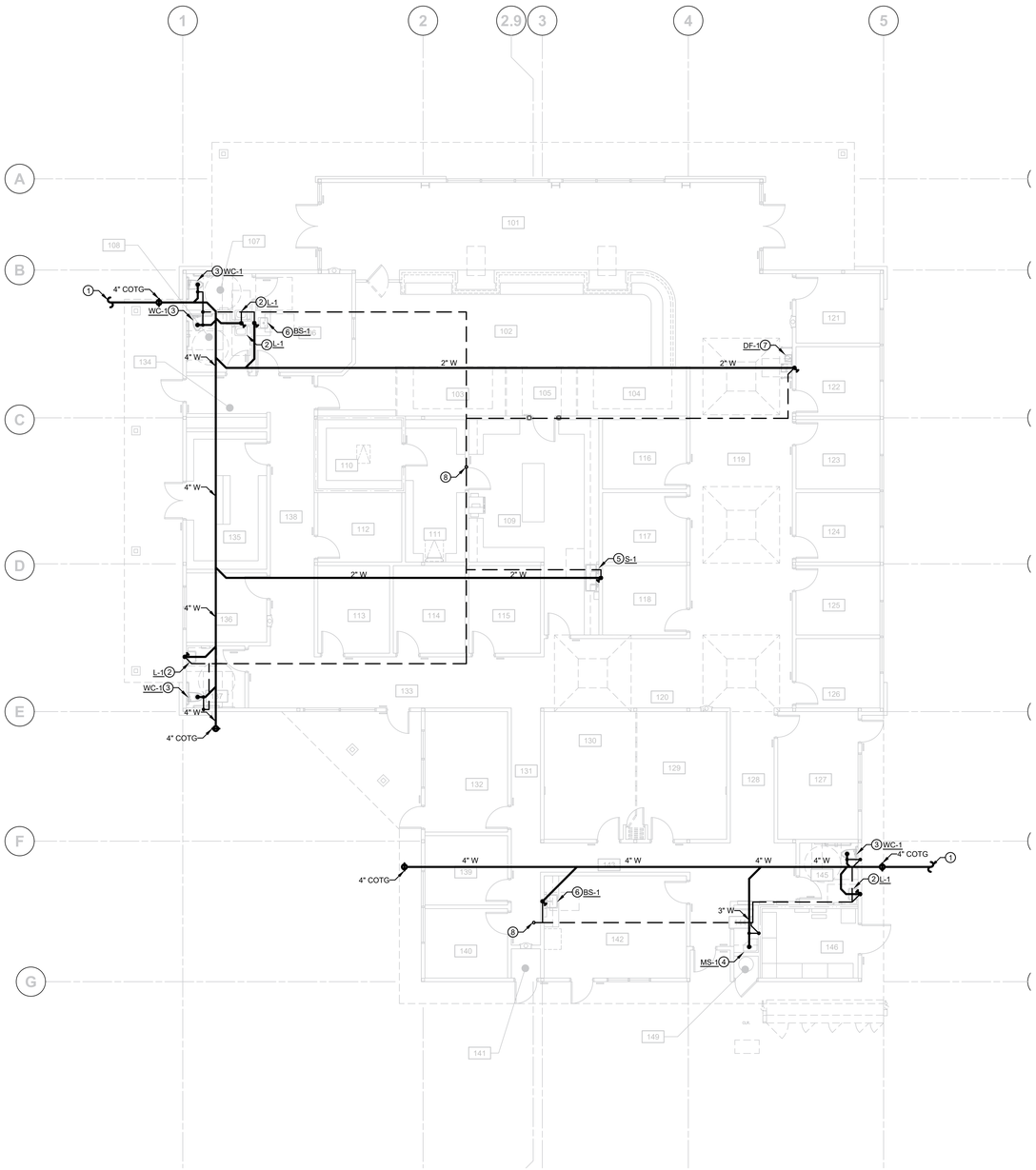

KEYNOTE(S):

1. CONNECT (N) WASTE LINE TO (E) MAIN WASTE LINE. REFER TO CIVIL FOR CONTINUATION
2. 2"W & 2"V FOR LAVATORY, L-1
3. 4"W, & 2"V FOR WATER CLOSET, WC-1
4. 3"W & 2"V FOR MOP SINK, MS-1
5. 2"W & 2"V FOR 2 COMP SINK, S-1
6. 2"W & 2"V FOR BREAK-ROOM SINK, BS-1
7. 2"W & 2"V FOR DRINKING FOUNTAIN, DF-1
8. 2" VENT RISER

PLUMBING FLOOR PLAN - WASTE & VENT

SCALE: 1/8" = 1'-0"

IDENTIFICATION STAMP
DIV. OF THE STATE ARCHITECT
APP: 02-123307 INC:
REVIEWED FOR
SS ☑ FLS ☑ ACS ☑
DATE: 10/15/2025

Owner:

WASHINGTON UNIFIED SCHOOL DISTRICT
7950 SOUTH ELM AVENUE
FRESNO, CA 93706

Project Name:

STUDENT SERVICES

Project Address:

WASHINGTON UNION HIGH SCHOOL
6041SOUTH ELM AVENUE
FRESNO, CA 93706

integrated designs
by SOMAM, Inc.

ARCHITECTURE
ENGINEERING
INTERIOR DESIGN

6011 N. FRESNO STREET, SUITE 130
FRESNO CALIFORNIA 93710
P.(559) 436-0881 F.(559) 436-0887
E: design@somam.com
integrateddesigns.com

Ownership of Documents
This document, the ideas and designs incorporated herein, as an instrument of Professional Service is the property of Integrated Designs by SOMAM Inc. and is not to be used, in whole or in part for any other project without written authorization.
© COPYRIGHT 2020

Stamp:

REGISTERED PROFESSIONAL ENGINEER
JOELON D. CHIANN
No. M35784
Exp. 03-31-26
MECHANICAL
STATE OF CALIFORNIA

Sheet Title:

PLUMBING FLOOR PLAN - WASTE & VENT

Job No.: 5613

Sheet No.: P1.1

Release:

JNL MECHANICAL DESIGN
11156 BUSINESS ROUTE 41
SUITE #105B
MADERA, CA 93636

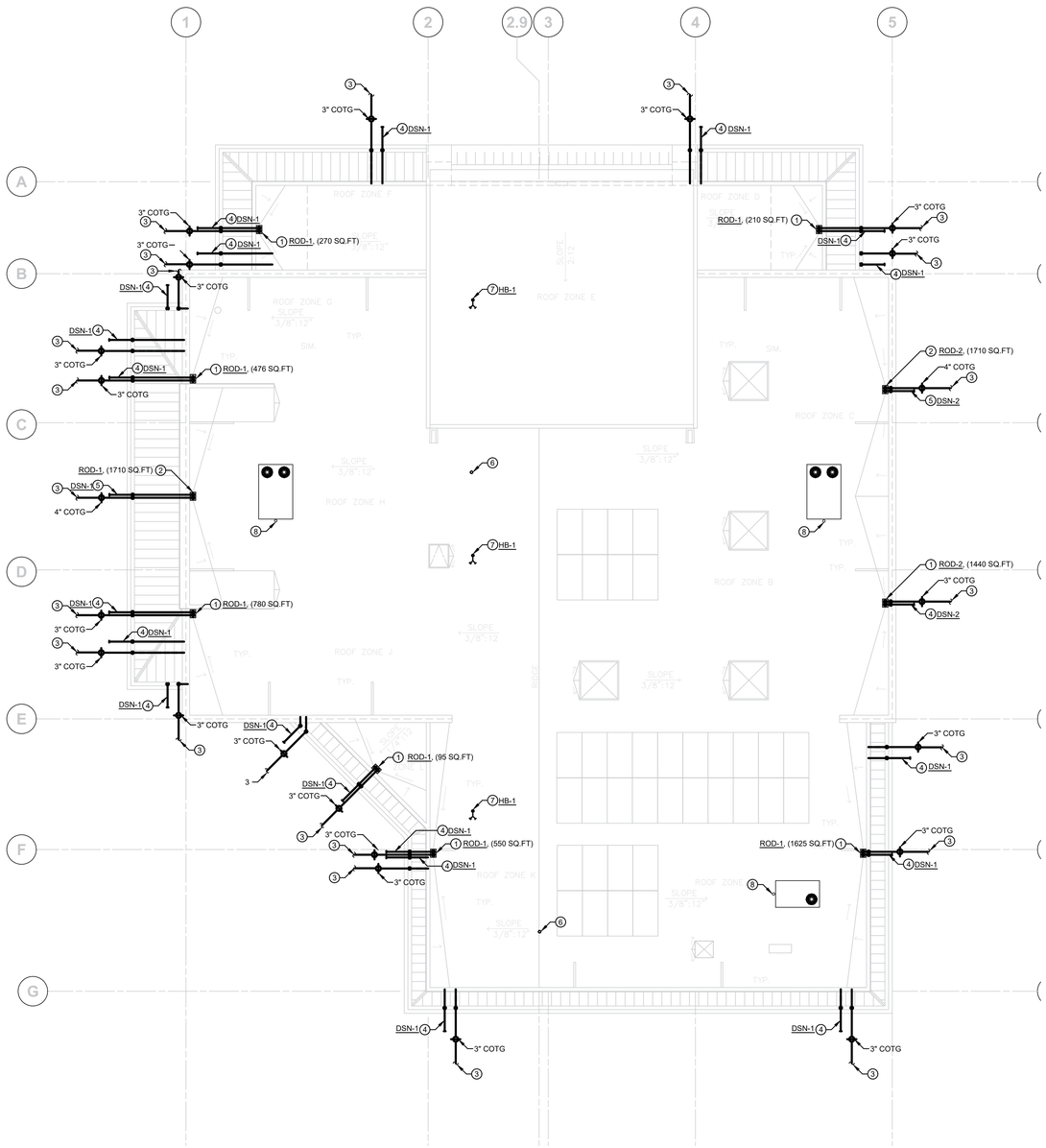

KEYNOTE(S):

1. 3" ROOF DRAIN TO GO BELOW GRADE. DRAIN TO BE SIZED PER 2022 CPC TABLE 1103.2, ROD-1
2. 4" ROOF DRAIN TO GO BELOW GRADE. DRAIN TO BE SIZED PER 2022 CPC TABLE 1103.2, ROD-2
3. CONNECT TO STORM DRAINAGE, REFER TO CIVIL DRAWING FOR CONTINUATION
4. DOWN SPOT NOZZLE FOR 3" O.D. TO BE INSTALLED PER MANUFACTURE. DAY LIGHT TO BE AS HIGH AS POSSIBLE, DSN-1
5. DOWN SPOT NOZZLE FOR 4" O.D. TO BE INSTALLED PER MANUFACTURE. DAY LIGHT TO BE AS HIGH AS POSSIBLE, DSN-2
6. 2"VTR FOR PLUMBING FIXTURES. REFER TO P1.1 FOR PLUMBING WORK
7. ROOF HOSE BIB, HB-1
8. CONDENSATION LINE TO CONNECT TO ROOF TOP UNITS. REFER TO DETAIL 'B'/P0.2 FOR CONDENSATE CONNECTION TO UNIT

PLUMBING ROOF PLAN

SCALE: 1/8" = 1'-0"

1" = 50'-0" 150 100 50 0 50
1" = 40'-0" 120 80 40 0 40
1" = 30'-0" 90 60 30 0 30
1" = 20'-0" 60 40 20 0 20
1/8" = 1'-0" 24 16 8 0 8
1/4" = 1'-0" 12 8 4 0 4

IDENTIFICATION STAMP
DIV. OF THE STATE ARCHITECT
APP: 02-123307 INC:
REVIEWED FOR
SS ☑ FLS ☑ ACS ☑
DATE: 10/15/2025

Owner:
WASHINGTON UNIFIED SCHOOL DISTRICT
7950 SOUTH ELM AVENUE
FRESNO, CA 93706

Project Name:
STUDENT SERVICES

Project Address:
WASHINGTON UNION HIGH SCHOOL
6041SOUTH ELM AVENUE
FRESNO, CA 93706

integrated designs
by SOMAM, Inc.
ARCHITECTURE
ENGINEERING
INTERIOR DESIGN
6011 N. FRESNO STREET, SUITE 130
FRESNO CALIFORNIA 93710
P:(559) 436-0881 F:(559) 436-0887
E: design@somam.com
integrateddesigns.com

Ownership of Documents
This document, the ideas and designs incorporated herein, as an instrument of Professional Service is the property of Integrated Designs by SOMAM Inc. and is not to be used, in whole or in part for any other project without written authorization.
© COPYRIGHT 2020

Stamp:
REGISTERED PROFESSIONAL ENGINEER
JOELON D. CHIN
No. M35784
Exp. 03-31-26
MECHANICAL
STATE OF CALIFORNIA

Sheet Title:
PLUMBING ROOF PLAN

Job No.: 5613

Sheet No.: P1.2

Release:

JNL MECHANICAL DESIGN
11156 BUSINESS ROUTE 41
SUITE #105B
MADERA, CA 93636

GENERAL NOTES:
1. COORDINATION OF WORK: LAYOUT OF MATERIALS, EQUIPMENT AND SYSTEMS ARE GENERALLY DIAGRAMMATIC UNLESS SPECIFICALLY DIMENSIONED. SOME OF THE WORK MAY BE SHOWN OFFSET FOR CLARITY. THE ACTUAL LOCATION OF ALL MATERIALS, PIPING, DUCTWORK, FIXTURES, EQUIPMENT, SUPPORT, ETC. ALL DUCT AND PIPE ELBOWS AND ELEVATIONS ARE NOT SHOWN, CONTRACTOR TO ENSURE BID COVERS ELEVATION CHANGES TO INTERFERENCE WITH OTHER UTILITIES. ALL WORK SHALL BE CAREFULLY PLANNED PRIOR TO INSTALLATION OF ANY WORK TO AVOID ALL INTERFERENCES WITH EACH OTHER, OR WITH STRUCTURAL, ELECTRICAL, ARCHITECTURAL OR OTHER ELEMENTS. VERIFY THE PROPER VOLTAGE AND PHASE FOR ALL EQUIPMENT WITH THE ELECTRICAL PLANS. ALL CONFLICTS SHALL BE CALLED TO THE ATTENTION OF THE ARCHITECT AND ENGINEER PRIOR TO THE INSTALLATION OF ANY WORK OR ORDERING OF ANY EQUIPMENT.
2. CUTTING, BORING, SAW CUTTING OR DRILLING THROUGH THE NEW OR EXISTING STRUCTURAL ELEMENTS TO BE DONE ONLY WHEN SO DETAILED IN THE DRAWINGS OR ACCEPTED BY THE ARCHITECT AND STRUCTURAL ENGINEER WITH THE APPROVAL OF THE DSA REPRESENTATIVE OR AUTHORITY HAVING JURISDICTION.
3. ALL DUCT INSULATION SHALL COMPLY WITH TABLE 4-16, 2022 CALIFORNIA NONRESIDENTIAL MANUAL.
4. PRIOR TO MECHANICAL PERMIT FINAL, A SMOKE DETECTOR SHUT-OFF TEST WILL BE REQUIRED.COORDINATE TESTING WITH FIRE PREVENTION, IF THERE IS AN ALARM PRESENT, THE SMOKE DETECTORS FOR UNIT SHUT-OFF SHALL BE SUPERVISED BY THE FIRE DETECTION OR ALARM SYSTEM AND INSTALLED IN ACCORDANCE WITH NFPA 72. DETECTION OF SMOKE IN ONE OF THE HVAC SUPPLY DETECTORS SHALL SHUT OFF THE POWER SOURCE TO ALL OF THE HVAC UNITS, FRESNO FIRE POLICY 407.4 , 2022 CMC 608.1
5. EXISTING AIR CONDITIONING UNITS AND THERMOSTATS TO BE SALVAGED AND RETURNED TO THE DISTRICT.

TITLE 24 MECHANICAL & PLUMBING REQUIREMENTS:
1. ALL AIR COOLED HVAC UNITS SHALL HAVE MINIMUM EFFICIENCIES PER TABLE 110.2-A.
2. ALL FURNACES SHALL HAVE MINIMUM EFFICIENCIES PER TABLE 110.2-J.
3. ALL FURNACES SHALL HAVE STAND BY LOSS CONTROLS PER SECTION 110.2 (d).
4. ALL THERMOSTATS SHALL COMPLY WITH 110 (b) OR (c) AS APPLICABLE
5. ALL HVAC SYSTEMS SHALL HAVE OUTSIDE (VENTILATION) AIR PER 120.1 (b) 2. ALSO SEE MECHANICAL PLANS FOR MINIMUM OUTSIDE AIR SETTINGS.
6. WHEN CO_2 VENTILATION DEMAND CONTROLS ARE SPECIFIED, PROVIDE IN ACCORDANCE WITH 120.1 C.
7. MINIMUM VENTILATION RATES SHALL BE INITIATED ONE HOUR PRIOR TO SCHEDULED OCCUPANCY PER 120.1 (c) 2.
8. EACH HVAC SYSTEM SHALL HAVE SHUT-OFF AND RESET CONTROLS COMPLYING WITH 120.2 (e).
9. ALL OUTSIDE AND EXHAUST DAMPERS SHALL AUTOMATICALLY CLOSE PER 120.2 (f).
10. ALL SYSTEMS GREATER THAN A NOMINAL 54 MBH COOLING CAPACITY SHALL HAVE ECONOMIZERS EQUIPPED WITH FAULT DETECTION AND DIAGNOSTICS PER 120.2 (i).
11. ALL DUCTWORK INSULATION SHALL COMPLY WITH 120.4
12. SET UP ALL THERMOSTATS WITH A DEAD BAND OF NO LESS THAN (3) DEGREES TO PREVENT CYCLING BETWEEN HEATING AND COOLING.

EQUIPMENT ANCHORAGE:

ALL MECHANICAL, PLUMBING, AND ELECTRICAL COMPONENTS SHALL BE ANCHORED AND INSTALLED PER THE DETAILS ON THE DSA-APPROVED CONSTRUCTION DOCUMENTS. THE FOLLOWING COMPONENTS SHALL BE ANCHORED OR BRACED TO MEET THE FORCE AND DISPLACEMENTS REQUIREMENTS PRESCRIBED IN THE 2022 CBC SECTION 1617A.1.18 THROUGH 1617A.1.26 AND ASCE 7-16 CHAPTERS 13, 26, AND 30:

1. ALL PERMANENT EQUIPMENT AND COMPONENTS.

2. TEMPORARY, MOVABLE OR MOBILE EQUIPMENT THAT IS PERMANENTLY ATTACHED (E.G. HARD WIRED) TO THE BUILDING UTILITY SERVICES SUCH AS ELECTRICITY, GAS OR WATER. "PERMANENTLY ATTACHED" SHALL INCLUDE ALL ELECTRICAL CONNECTIONS EXCEPT PLUGS FOR 110/220 VOLTS RECEPTACLES HAVING A FLEXIBLE CABLE.

3. TEMPORARY, MOVABLE OR MOBILE EQUIPMENT WHICH IS HEAVIER THAN 400 POUNDS OR HAS A CENTER OF MASS LOCATED 4 FEET OR MORE ABOVE THE ADJACENT FLOOR OR ROOF LEVEL THAT DIRECTLY SUPPORT THE COMPONENT IS REQUIRED TO BE RESTRAINED IN A MANNER APPROVED BY DSA.

THE FOLLOWING MECHANICAL AND ELECTRICAL COMPONENTS SHALL BE POSITIVELY ATTACHED TO THE STRUCTURE BUT NEED NOT DEMONSTRATE DESIGN COMPLIANCE WITH THE REFERENCE NOTED ABOVE. THESE COMPONENTS SHALL HAVE FLEXIBLE CONNECTIONS PROVIDED BETWEEN THE COMPONENT AND ASSOCIATED DUCTWORK, PIPING, AND CONDUIT. FLEXIBLE CONNECTIONS MUST ALLOW MOVEMENT IN BOTH TRANSVERSE AND LONGITUDINAL DIRECTIONS:

A. COMPONENTS WEIGHING LESS THAN 400 POUNDS AND HAVING A CENTER OF MASS LOCATED 4 FEET OR LESS ABOVE THE ADJACENT FLOOR OR ROOF LEVEL THAT DIRECTLY SUPPORT THE COMPONENT.

B. COMPONENT WEIGHING LESS THAN 20 POUNDS, OR IN THE CASE OF DISTRIBUTED SYSTEMS, LESS THAN 5 POUNDS PER FOOT, WHICH ARE SUSPENDED FROM A ROOF OR FLOOR OR HUNG FROM A WALL.

THE ANCHORAGE OF ALL MECHANICAL, ELECTRICAL AND PLUMBING COMPONENTS SHALL BE SUBJECT TO THE APPROVAL OF THE DESIGN PROFESSIONAL IN GENERAL RESPONSIBLE CHARGE OR STRUCTURAL ENGINEER DELEGATED RESPONSIBILITY AND ACCEPTANCE BY DSA. THE PROJECT INSPECTOR WILL VERIFY THAT ALL COMPONENT AND EQUIPMENT HAVE BEEN ANCHORED IN ACCORDANCE WITH THE ABOVE REQUIREMENTS.

PIPING, DUCTWORK, AND ELECTRICAL DISTRIBUTION SYSTEM BRACING NOTE:

PIPING, DUCTWORK, AND ELECTRICAL DISTRIBUTION SYSTEMS SHALL BE BRACED TO COMPLY WITH THE FORCES AND DISPLACEMENTS PRESCRIBED IN ASCE 7 SECTION 13.3 AS DEFINED IN ASCE 7 SECTIONS 13.6.5, 13.6.6, 13.6.7, AND 13.6.8, AND 2022 CBC, SECTIONS 1617A.1.24, 1617A.1.25 AND 1617A.1.26.

THE METHOD OF SHOWING BRACING AND ATTACHMENTS TO THE STRUCTURE FOR THE IDENTIFIED DISTRIBUTION SYSTEM ARE AS NOTED BELOW. THE MEP DESIGN PROFESSIONAL ENGINEER RESPONSIBLE FOR CONTENT ON THESE SHEETS HAS VERIFIED THAT THE DESIGN METHODS IDENTIFIED BELOW ARE IN ACCORDANCE WITH DS IR 16-13.

MECHANICAL PIPING (MP), MECHANICAL DUCTS (MD), PLUMBING PIPING (PP), ELECTRICAL DISTRIBUTION SYSTEMS (E):
X X
MP____ MD____ PP____ E____OPTION 1: PROJECT-SPECIFIC DESIGN.
MP____ MD____ PP____ E____OPTION 2: DESIGN BASED ON OSHPD OPM, WITHIN PROJECT SUBMITTAL.
MP____ MD____ PP____ E____OPTION 2: DESIGN BASED ON OSHPD OPM, DEFERRED SUBMITTAL.

APPLICABLE CODES AND REGULATIONS:

CALIFORNIA CODE OF REGULATIONS (C.C.R.)
PART 1 - 2025 CALIFORNIA STANDARDS ADMINISTRATIVE CODE, TITLE 24, C.C.R.
PART 2 - 2022 CALIFORNIA BUILDING CODE (C.B.C.), TITLE 24, C.C.R. VOLUMES 1-3.
PART 3 - 2022 CALIFORNIA ELECTRICAL CODE, TITLE 24, C.C.R.
PART 4 - 2022 CALIFORNIA MECHANICAL CODE (C.M.C.), TITLE 24 C.C.R.
PART 5 - 2022 CALIFORNIA PLUMBING CODE (C.P.C.), TITLE 24, C.C.R.
PART 6 - 2022 CALIFORNIA ENERGY CODE, TITLE 24, C.C.R.
PART 9 - 2022 CALIFORNIA FIRE CODE, TITLE 24, C.C.R.

AIR CONDITIONING LEGEND		
SYMBOL	ITEM	ABBR
	ROUND DUCT	
	EXISTING ROUND DUCT	
	SHEET METAL DUCT	
	DUCT WITH ACOUSTIC LINING	
	SUPPLY AIR DUCT DROP	
	RETURN AIR DUCT DROP	
	EXHAUST AIR DUCT DROP	
	SUPPLY AIR DUCT RISE	
	RETURN AIR DUCT RISE	
	EXHAUST AIR DUCT RISE	
	VOLUME DAMPER	
-OR-	FIRE DAMPER WITH ACCESS PANEL	FD
-OR-	FIRE/SMOKE DAMPER WITH ACCESS PANEL	FSD
CFM	CUBIC FEET OF AIR PER MINUTE	CFM
T	THERMOSTAT 48" TO TOP OF BOX	
H	HUMIDISTAT	
	DIRECTION OF FLOW	
	SUPPLY AIR	SA
	RETURN AIR	RA
	EXHAUST AIR	EA
	OUTSIDE AIR	OSA
	PIPE OR DUCT TURN DOWN	
	PIPE OR DUCT TURN UP	
	POINT OF CONNECTION	POC
	EXISTING (DESIGNATED)	(E)
SD	SMOKE DETECTOR	SD
	DUCT TO BE DEMOLISHED	
RS	REMOTE SENSOR	RS
	BACK-DRAFT DAMPER	BDD

ROOFTOP UNIT

TAG	RTU-1	RTU-2	RTU-3
MANUFACTURER	DAIKIN	DAIKIN	DAIKIN
MODEL#	DSH1204D000001S	DSH0904D000001S	DHH0724D000001S
UNIT SIZE (TON)	10	7.5	6
EFFICIENCY	15.2 IEER / 11.40 EER	16 IEER / 11.4 EER	17.2 SEER / 12.0 EER
COOLING CAPACITY(MBH)	116	86	69
SENSIBLE CAPACITY(MBH)	116	86	69
DESIGN (CFM)	4000	3000	2400
OSA (CFM)	819	366	545
RETURN AIR (CFM)	3181	2644	1855
HEATING CAPACITY INPUT(KW)	10	7.08	5.19
HEATING CAPACITY OUTPUT (MBH)	116	85	62
COP	3.4	3.4	3.5
ESP	0.8	0.8	0.8
BHP	3.5	2.4	1.2
VOLTAGE/PHASE	460-3-60	460-3-60	460-3-60
MCA/MOP	27.3 / 30	20.1 / 25	12.2 / 15
WEIGHT (LBS)	1900	1725	1200
ACCESORIES	1,2,3,4,5,6,7,8,9	1,2,3,4,5,6,7,8,9	1,2,3,4,5,6,7,8,9

1. FACTORY SUPPLIED DUCT SMOKE DETECTOR
2. CEC 2022 COMPLIANT ECONOMIZER WITH POWER EXHAUST
   2.1. 6-TON: 1/4 HP, 0.9 FLA, 1.1 MCA
   2.2. 7.5-TON: 1/2 HP, 1.2 FLA, 1.5 MCA
   2.3. 10-TON: 1/2 HP, 1.2 FLA, 1.5 MCA
3. CEC 2022 COMPLIANT 7 DAY PROGRAMMABLE THERMOSTAT
4. ECONOMIZERS HIGH LIMIT SHUT OFF GREATER THAN 75°F BASED ON FIXED TEMPERATURE, TABLE 4-19 2022 NONRESIDENTIAL COMPLIANCE MANUAL
5. MERV 13 FILTER TO BE USED PER 2022 CEC 120.ICC. CONTRACTOR TO INCLUDE 2" FILTER RACK
6. ROOFTOP UNIT TO BE MOUNTED PER DETAIL 'A'/M0.2
7. VIBRATION ISOLATORS FOR ROOFTOP UNIT
8. LOW PROBABILITY SYSTEM(S) PER CMC 1103.2
9. REFRIGERANT TYPE R410-A, THE SAFETY GROUP IS A1 PER TABLE 1102.3, CMC 1103

COMBINATION ECONOMIZER AND POWER EXHAUST SCHEDULE

TAG	PE-1	PE-2	PE-3
MANUFACTURER	MCDANIEL METALS	MCDANIEL METALS	MCDANIEL METALS
MODEL#	144-DK-0904	144-DK-0904	144-FK-36
DESIGN CFM	4,000	3,000	2,400
HP / WATTS	0.5 / -	0.5 / -	0.25
FLA	1.2	1.2	1.1
MCA	1.5	1.5	0.9
VOLTAGE / PHASE	460 / 1	460 / 1	460 / 1
WEIGHT (LBS)	185	185	185
ACCESSORIES	1,a,b,c	1,a,b,c	2,a,b,c

GENERAL NOTES APPLICABLE TO ALL UNITS:
A. DISCONNECT PROVIDED AND INSTALLED BY ELECTRICAL CONTRACTOR
B. ECONOMIZER SHALL MEET TITLE 24 MANDATORY REQUIREMENTS FOR DAMPER LEAKAGE, FAULT DETECTION AND DIAGNOSTIC CONTROLS.

UNIT SPECIFIC NOTES:
1. PROVIDE WITH CORRESPONDING MCDANIEL METALS MODEL 123-DK-09DB ECONOMIZER. PROVIDE ECONOMIZER DDC GENERIC WITH BELIMO ACTUATOR.
2. PROVIDE WITH CORRESPONDING MCDANIEL METALS MODEL 123-DK-036DB ECONOMIZER. PROVIDE ECONOMIZER DDC GENERIC WITH BELIMO ACTUATOR.

CONTROL NOTES:
a. ECONOMIZER SHALL BE DRY BULB CONTROLLED.
b. ECONOMIZER SHALL BE CONTROLLED BY THE PEARL ECONOMIZER CONTROLLER. PROVIDE WITH BELIMO NON COMMUNICATING ACTUATORS.
c. POWER EXHAUST SHALL MODULATE TO MAINTAIN 0.05"WC IN THE SPACE SERVED BY THE MATCHING UNIT

INDOOR UNIT SCHEDULE

TAG	IDU-1
MANUFACTURER	DAIKIN
TYPE	WALL-MOUNTED
MODEL#	FTX24BXVJU
SIZE (TON)	2
COOLING (MBH)	24.0
HEATING (MBH)	27.6
SUPPLY (CFM)	754
POWER (KW)	0.54
VOLTAGE / PHASE	208-230 / 1
MCA / MOP / FLA	- / - / -
WEIGHT (LBS)	50
ACCESSORIES	1, 2, 3

ACCESSORIES:
1. TITLE 24 COMPLIANT THERMOSTAT INSTALLED 48" TO TOP OF BOX
2. INSTALL PER DETAIL 'D'/M0.2
3. MITSUBISHI, LG, OR APPROVED EQUAL OKAY FOR SUBSTITUTION

EXHAUST FAN SCHEDULE

TAG	CEF-1	CEF-2 & 4	CEF-3	CEF-5
MANUFACTURER	GREENHECK	GREENHECK	GREENHECK	GREENHECK
MODEL#	CSP-A390-VG	CSP-A390-VG	CSP-A390-VG	CSP-A390-VG
CFM	87	105	110	91
ESP	0.5	0.5	0.5	0.5
RPM	1258	1231	1228	1245
VOLTAGE / PHASE	230 / 1	230 / 1	230 / 1	230 / 1
HP	0.3	0.4	0.4	0.3
WEIGHT (LBS)	24	24	24	24
SONES	1.4	1.3	1.3	1.4
ACCESSORIES	1	1	1	1

1. TO BE INTERLOCKED WITH LIGHT SWITCH

OUTDOOR UNIT SCHEDULE

TAG	ODU-1
MANUFACTURER	DAIKIN
MODEL#	RX24BXVJU
SIZE	2 TON
COOLING CAPACITY (MBH)	24.0
HEATING CAPACITY (MBH)	27.6
SEER2	20.0
HSPF2	9.0
COP (47°)	3.45
AIRFLOW (CFM)	1879
EER2	12.2
VOLTAGE/ PHASE	208 - 230 / 1
MCA / MOCP / RLA / FLA	16.5 / 20 / - / -
WEIGHT (LBS)	200
ACCESSORIES	1

ACCESSORIES:
1. ROOF MOUNTED PER MANUFACUTERS SPACING AND CLEARANCES, REFER TO DETAIL 'C'/M0.2 FOR ADDITIONAL INFORMATION
2. REFRIGERANT TYPE R410-A, THE SAFETY GROUP IS A1 PER TABLE 1102.3, CMC 1103

GRILLE SCHEDULE

TAG	A	B	C	D
TYPE	T-BAR CEILING (SUPPLY)	T-BAR CEILING (EXHAUST)	HARD CEILING (SUPPLY)	HARD CEILING (EXHAUST)
DESCRIPTION	TITUS - TDC-3 - SQUARE AND RECTANGULAR DIFFUSERS. STEEL #26 WHITE FINISH. ALL SIZES TO BE FULL FACED.	TITUS - 350 FL-3 - 3/4" BLADE SPACING, STANDARD FINISH #26 WHITE. ALL SIZES TO BE FULL FACED.	TITUS - TDC-1 - SQUARE AND RECTANGULAR DIFFUSERS WITH ROUND NECK ADAPTOR. STEEL #26 WHITE FINISH. ALL SIZES TO BE FULL FACED.	TITUS - 350 RL-1 - 3/4" BLADE SPACING, STEEL FINISH #26 WHITE.

WASHINGTON UNION VENTILATION TABLE

UNIT #	ZONE	ROOM	AREA (SQ.FT)	VENTILLATION RATE* (CFM/ SQ. FT)	OSA (CFM)	OSA PER ZONE (CFM)	TOTAL AREA (SQ.FT)	TOTAL OSA (CFM)
RTU-1	1	RECEPTION 102 /LOBBY 101	1968	0.15	295	819	8159.5	1730
	1	WAITING AREA 119	750	0.5	375			
	1	OFFICE 116	110	0.15	17			
	1	OFFICE 117	110	0.15	17			
	1	OFFICE 118	110	0.15	17			
	1	OFFICE 121	110	0.15	17			
	1	OFFICE 122	110	0.15	17			
	1	OFFICE 123	110	0.15	17			
	1	OFFICE 124	110	0.15	17			
	1	OFFICE 125	110	0.15	17			
	1	OFFICE 126	110	0.15	17			
RTU-2	2	HALL 138 & 133	597	0.15	90	366		
	2	BOOK STORAGE 135	208	0.15	31			
	2	CAMPUS POLICE 136	104.5	0.15	16			
	2	TOILET ROOM 137	68	0.15	10			
	2	ARCHIVE STORAGE 110	110	0.15	17			
	2	PAPER STORAGE 111	160	0.15	24			
	2	OFFICE 112	110	0.15	17			
	2	OFFICE 113	118	0.15	18			
	2	OFFICE 114	118	0.15	18			
	2	OFFICE 115	118	0.15	18			
	1	WORKING ROOM 109	433	0.15	65			
	2	NURSE 106	178	0.15	27			
	2	TOILET ROOM 107	50	0.15	8			
	2	TOILET ROOM 108	68	0.15	10			
RTU-3	3	HALL 131, 143, & 128	481	0.15	72	545		
	3	CONFERENCE 130	221	0.5	111			
	3	CONFERENCE 129	217	0.5	109			
	3	DIRECTOR 127	193	0.15	29			
	3	STAFF LOUNGE 142	273	0.5	137			
	3	ELECT ROOM 146	103	0.15	15			
	3	STOR 141	16	0.15	2			
	3	DIRECTOR 132	187	0.15	28			
	3	OFFICE 139	108	0.15	16			
	3	OFFICE 140	108	0.15	16			
	3	TOILET ROOM 145	68	0.15	10			
	3	JANITOR	36	0	0			

*2022 NONRESITDENTIAL COMPLIANCE MANUAL - TABLE 4-14

MECHANICAL GENERAL NOTES, LEGEND, AND SCHEDULES

SCALE: N.T.S.

INDEX:

M0.1 - MECHANICAL GENERAL NOTES, LEGEND, AND SCHEDULES
M0.2 - MECHANICAL DETAILS
M1.0 - MECHANICAL FLOOR PLAN
M1.1 - MECHANICAL ROOF PLAN
M2.0 - MECHANICAL TITLE 24
M2.1 - MECHANICAL TITLE 24

IDENTIFICATION STAMP
DIV. OF THE STATE ARCHITECT
APP: 02-123307 INC:
REVIEWED FOR
SS ☑ FLS ☑ ACS ☑
DATE: 10/15/2025

Owner:
WASHINGTON UNIFIED SCHOOL DISTRICT

WASHINGTON UNIFIED SCHOOL DISTRICT
7950 SOUTH ELM AVENUE
FRESNO, CA 93706

Project Name:
STUDENT SERVICES

Project Address:
WASHINGTON UNION HIGH SCHOOL
6041SOUTH ELM AVENUE
FRESNO, CA 93706

integrated designs
by SOMAM, Inc.

ARCHITECTURE
ENGINEERING
INTERIOR DESIGN

6011 N. FRESNO STREET, SUITE 130
FRESNO CALIFORNIA 93710
P:(559) 436-0881 F:(559) 436-0887
E: design@somam.com
integrateddesigns.com

Ownership of Documents
This document, the ideas and designs incorporated herein, as an instrument of Professional Service is the property of Integrated Designs by SOMAM Inc. and is not to be used, in whole or in part for any other project without written authorization.
© COPYRIGHT 2020

Stamp:
REGISTERED PROFESSIONAL ENGINEER
DEEON D. CHINN
No. M35784
Exp. 03-31-26
MECHANICAL
STATE OF CALIFORNIA

Sheet Title:
MECHANICAL GENERAL NOTES, LEGEND, AND SCHEDULES

Job No.: 5613

Sheet No.: M0.1

Release:

JNL MECHANICAL DESIGN
11156 BUSINESS ROUTE 41
SUITE #105B
MADERA, CA 93636

*NOTE: ISOLATORS IN CURB SHALL BE TYPE CQA WITH HCAI OPM-0401-13

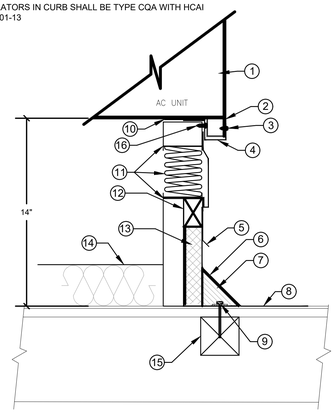

1. AIR CONDITIONING UNIT.
2. UNIT BASE RAIL, SEE MANUFATURER'S CUT SHEET
3. (6) #12x 1" SCREW PER CLIP
4. MANUFACTURER'S HOLD DOWN S-CLIP, 16 GA GALV. STEEL. TYP OF 6, 2 EACH LONG SIDE.
5. GALVANIZED S/M FLASHING.
6. ROOFING FELTS.
7. CANT STRIP.
8. ROOF, SEE ARCH DWGS.
9. 1/4"x4" SDS SCREWS @ 16" OC. MIN (3) SCREWS PER SIDE
10. 2"x1/4" CONTINUOUS DENSE NEOPRENE SPONGE GASKET.
11. CQA-F155 SPRING ISOLATION PER CURB ISOLATION CALCULATION 1A. PRE-SLOPED ROOF CURB. (FURNISHED WITH A/C UNIT)
12. WOOD NAILER.
13. 1-1/2" RIGID INSULATION, COMPATIBLE WITH ROOFING.
14. MINIMUM R-19 INSULATION.
15. 4x6 MIN. BLOCKING OR LVL BEAM, SEE STRUCTURAL DRAWINGS
16. (6) #12X 1" SCREW PER CLIP.

A AC UNIT ROOF MOUNTING DETAIL
SCALE:N.T.S.

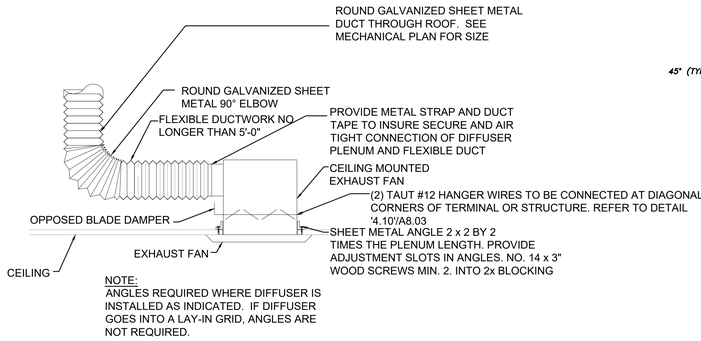

NOTE:
ANGLES REQUIRED WHERE DIFFUSER IS INSTALLED AS INDICATED. IF DIFFUSER GOES INTO A LAY-IN GRID, ANGLES ARE NOT REQUIRED.

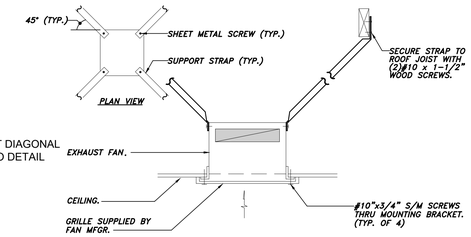

NOTE:
LAY-IN GRID ATTACHMENT

B CEILING EXHAUST FAN DETAIL
SCALE: N.T.S.

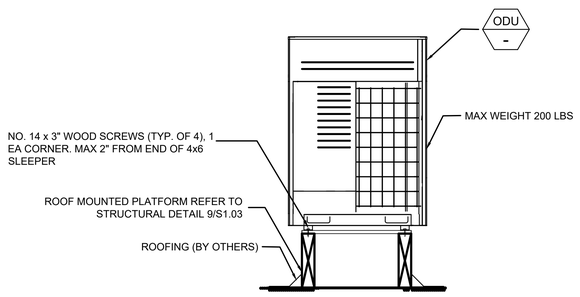

C OUTDOOR UNIT OR HEAT PUMP ROOF MOUNTED
SCALE: N.T.S.

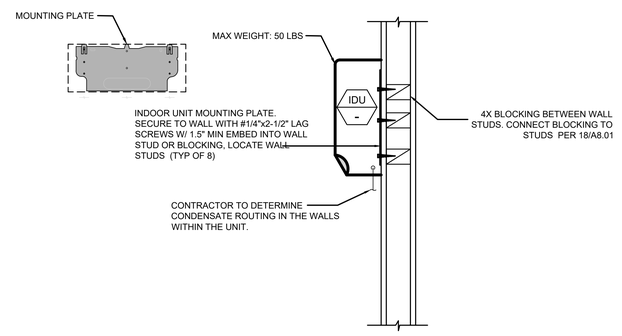

D INDOOR UNIT - WALL MOUNTED
SCALE: N.T.S.

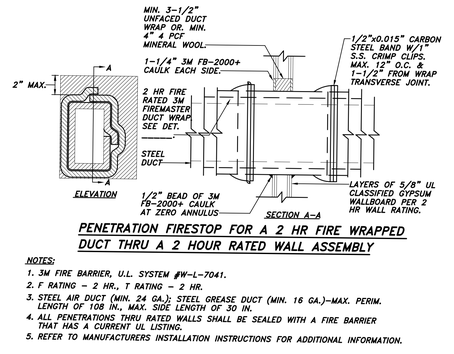

PENETRATION FIRESTOP FOR A 2 HR FIRE WRAPPED DUCT THRU A 2 HOUR RATED WALL ASSEMBLY

NOTES:
1. 3M FIRE BARRIER, U.L. SYSTEM #W-L-7041.
2. F RATING – 2 HR., T RATING – 2 HR.
3. STEEL AIR DUCT (MIN. 24 GA.); STEEL GREASE DUCT (MIN. 16 GA.)–MAX. PERIM. LENGTH OF 108 IN., MAX. SIDE LENGTH OF 30 IN.
4. ALL PENETRATIONS THRU RATED WALLS SHALL BE SEALED WITH A FIRE BARRIER THAT HAS A CURRENT UL LISTING.
5. REFER TO MANUFACTURERS INSTALLATION INSTRUCTIONS FOR ADDITIONAL INFORMATION.

E 2-HR FIRE WRAPPED DUCT FIRE STOP DETAIL
SCALE: N.T.S.

NOTE:
C10-SEISMIC-S-CLIP7037 TO BE INSTALLED WITH ISOLATION CURB. 1 PER SHORT SIDE AND 2 PER LONG SIDE. 6 IN TOTAL.

1. LOCATION OF S-CLIP

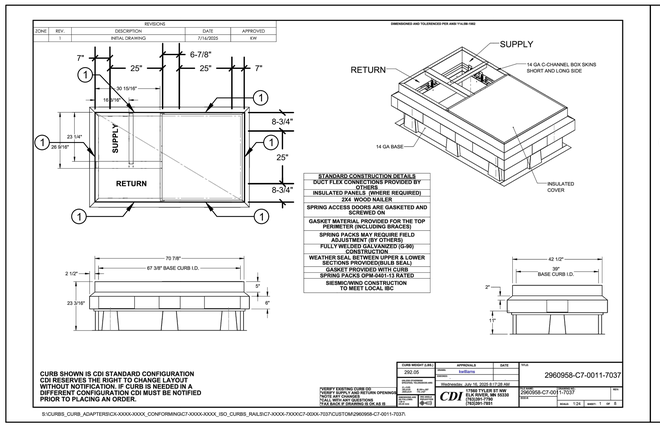

F ISOLATION CURB - 6-TON
SCALE: N.T.S.

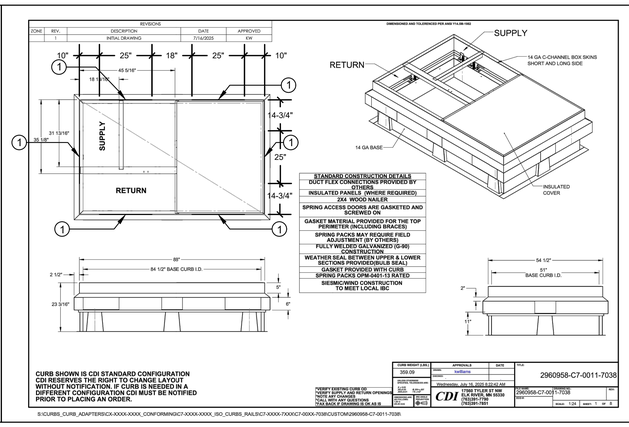

G ISOLATION CURB - 10 & 7.5-TON
SCALE: N.T.S.

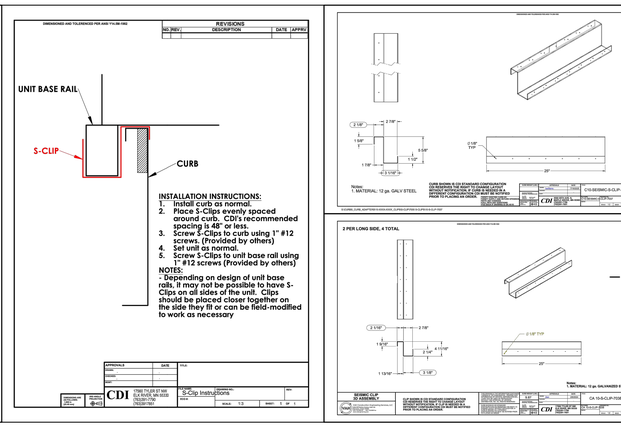

MECHANICAL DETAILS
SCALE: N.T.S.

JNL MECHANICAL DESIGN
11156 BUSINESS ROUTE 41
SUITE #105B
MADERA, CA 93636

F:_JNL 2025 jobs\25018 Washington Union - Student Services\04-Drawings\Washington Union M Sheets.dwg JOELON 9/19/25

IDENTIFICATION STAMP
DIV. OF THE STATE ARCHITECT
APP: 02-123307 INC:
REVIEWED FOR
SS ☑ FLS ☑ ACS ☑
DATE: 10/15/2025

Owner:
WASHINGTON UNIFIED SCHOOL DISTRICT

WASHINGTON UNIFIED SCHOOL DISTRICT
7950 SOUTH ELM AVENUE
FRESNO, CA 93706

Project Name:
STUDENT SERVICES

Project Address:
WASHINGTON UNION HIGH SCHOOL
6041SOUTH ELM AVENUE
FRESNO, CA 93706

integrated designs
by SOMAM, Inc.
ARCHITECTURE ENGINEERING INTERIOR DESIGN
6011 N. FRESNO STREET, SUITE 130
FRESNO CALIFORNIA 93710
P:(559) 436-0881 F:(559) 436-0887
E: design@somam.com
integrateddesigns.com

Ownership of Documents
This document, the ideas and designs incorporated herein, as an instrument of Professional Service is the property of Integrated Designs by SOMAM Inc. and is not to be used, in whole or in part for any other project without written authorization.
© COPYRIGHT 2020

Stamp:
REGISTERED PROFESSIONAL ENGINEER
JOELON D. CHINN
No. M35784
Exp. 03-31-26
MECHANICAL
STATE OF CALIFORNIA

Sheet Title:
MECHANICAL DETAILS

Job No.: 5613

Sheet No.: M0.2

Release:

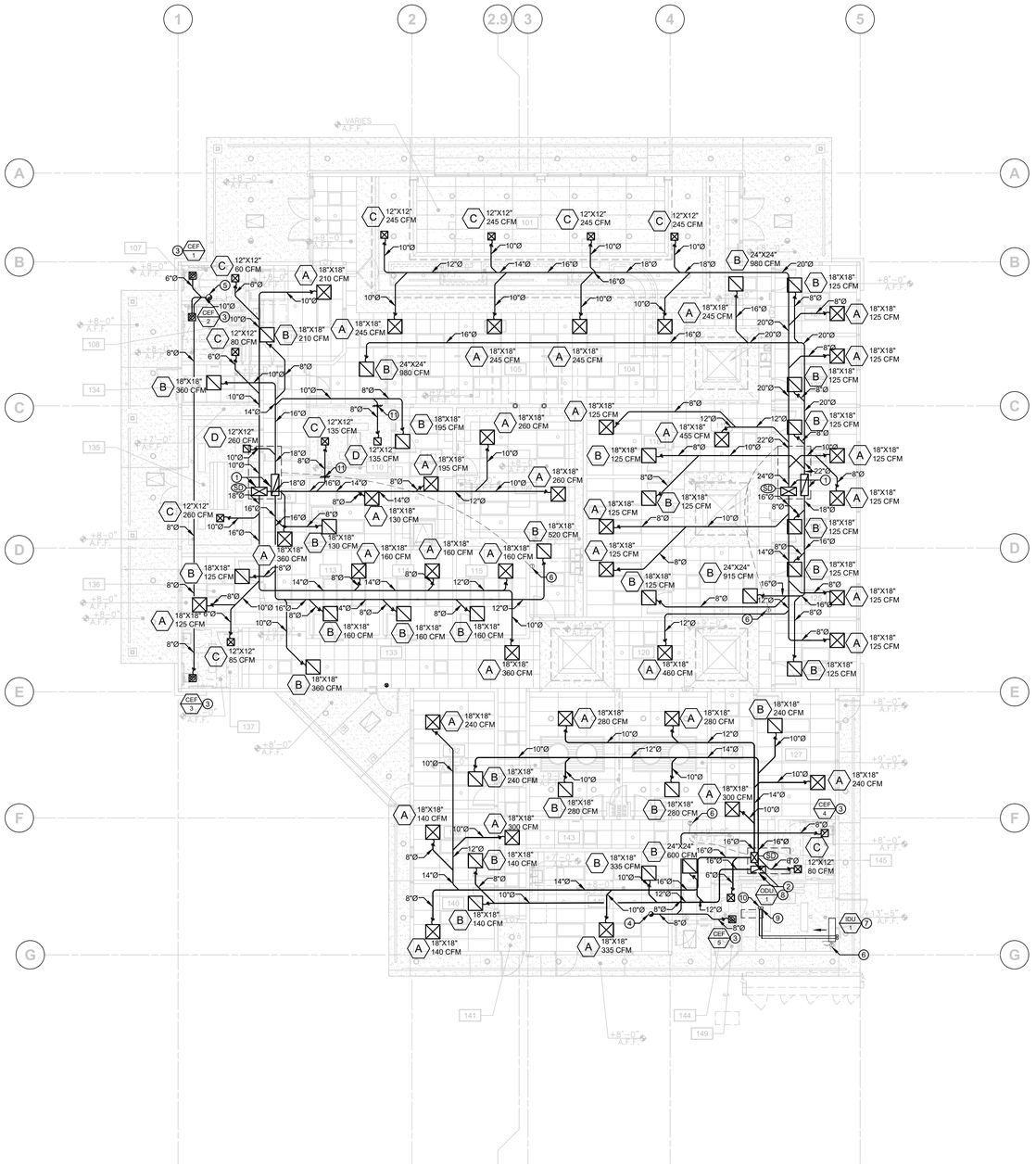

KEYNOTES:

1. 14" X 26-5/16" SUPPLY DROP & 12-3/4" X 36-1/8" RETURN DROP FROM ROOF TOP UNIT, RTU-1 & RTU-2
2. 12" X 17" SUPPLY DROP & 11" X 25" RETURN DROP FROM ROOF TOP UNIT, RTU-3
3. CEILING EXAUST FAN TO BE INSTALLED PER DETAIL 'B'/M0.2, CEF-1, CEF-2, CEF-3, CEF-4 & CEF-5
4. 8" EXHAUST DUCT RISER TO THE ROOF
5. 10" EXHAUST DUCT RISER TO THE ROOF
6. PROGRAMMABLE RTU THERMOSTAT, COORDINATE WITH ARCHITECT
7. (N) INDOOR UNIT TO BE INSTALLED PER DETAIL 'D'/M0.2, IDU-1
8. (N) OUTDOOR UNIT, REFER TO MECHANICAL ROOF PLAN (M1.1) FOR MORE INFORMATION, ODU-1
9. 3/8" LIQUID REFRIGERANT LINE
10. 5/8" SUCTION REFRIGERANT LINE
11. RUSKIN FSDR60 ROUND FIRE/SMOKE DAMPER. INSTALL PER DETAIL 'E'/M0.2

MECHANICAL FLOOR PLAN

SCALE: 1/8" = 1'-0"

1" = 50'-0" 0 50 100 150
1" = 40'-0" 40 0 40 80 120
1" = 30'-0" 30 0 30 60 90
1" = 20'-0" 20 0 20 40 60
1/8" = 1'-0" 8 0 8 16 24
1/4" = 1'-0" 4 0 4 8 12

IDENTIFICATION STAMP
DIV. OF THE STATE ARCHITECT
APP: 02-123307 INC:
REVIEWED FOR
SS ☑ FLS ☑ ACS ☑
DATE: 10/15/2025

Owner:
WASHINGTON UNIFIED SCHOOL DISTRICT

WASHINGTON UNIFIED SCHOOL DISTRICT
7950 SOUTH ELM AVENUE
FRESNO, CA 93706

Project Name:
STUDENT SERVICES

Project Address:
WASHINGTON UNION HIGH SCHOOL
6041SOUTH ELM AVENUE
FRESNO, CA 93706

integrated designs
by SOMAM, Inc.

**ARCHITECTURE
ENGINEERING
INTERIOR DESIGN**

6011 N. FRESNO STREET, SUITE 130
FRESNO CALIFORNIA 93710
P:(559) 436-0881 F:(559) 436-0887
E: design@somam.com
integrateddesigns.com

Ownership of Documents
This document, the ideas and designs incorporated herein, as an instrument of Professional Service is the property of Integrated Designs by SOMAM Inc. and is not to be used, in whole or in part for any other project without written authorization.
© COPYRIGHT 2020

Stamp:
REGISTERED PROFESSIONAL ENGINEER
JOELON D. CHUNG
No. M35784
Exp. 03-31-26
MECHANICAL
STATE OF CALIFORNIA

Sheet Title:
MECHANICAL FLOOR PLAN

Job No.: 5613

Sheet No.: M1.0

Release:

JNL MECHANICAL DESIGN
11156 BUSINESS ROUTE 41
SUITE #105B
MADERA, CA 93636

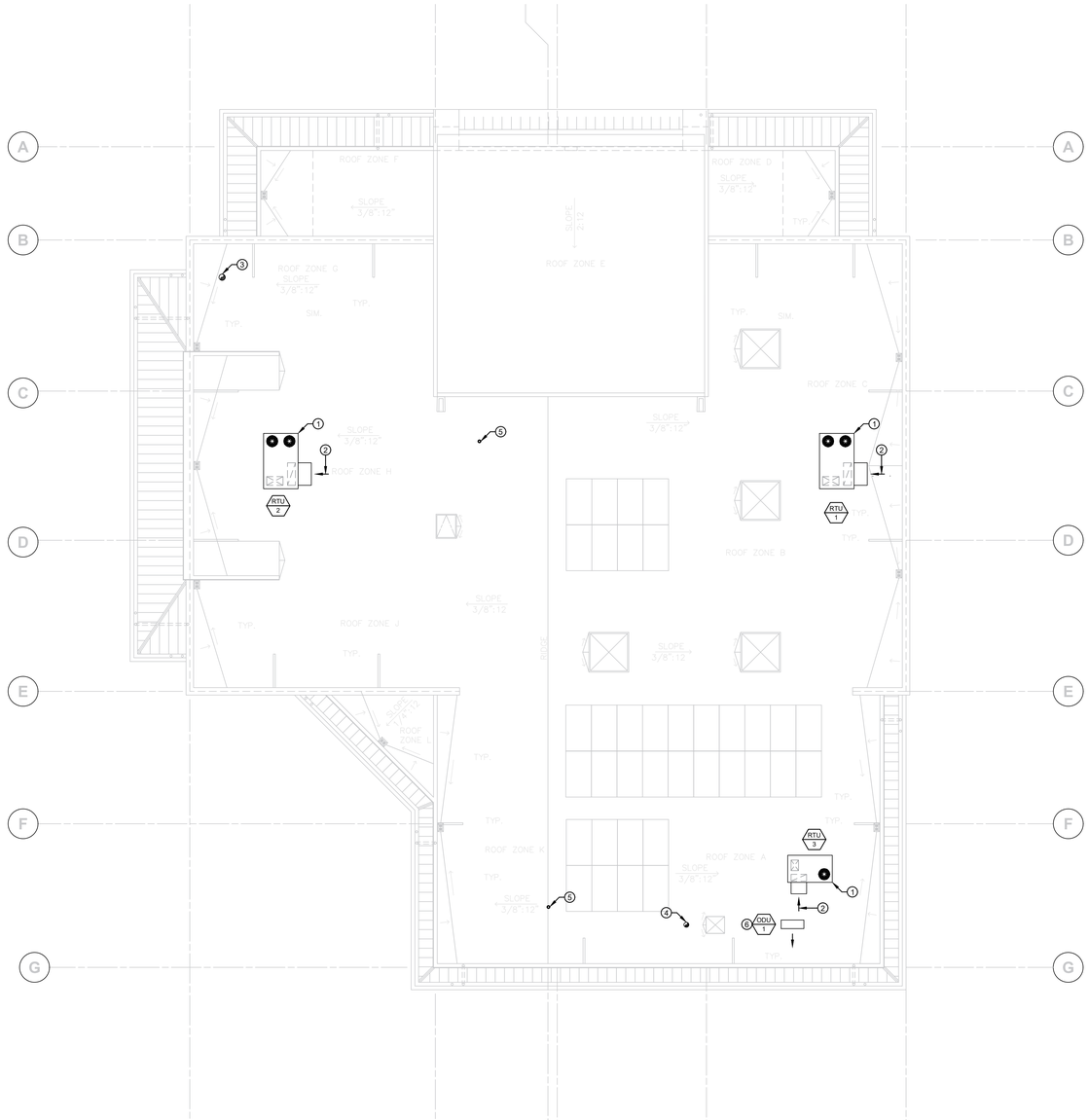

KEYNOTES:

1. (N) ROOF TOP UNIT TO BE INSTALLED PER DETAIL 'A'/M0.2, RTU-1, RTU-2 & RTU-3
2. OSA INTAKE
3. 10" EXHAUST DUCT RISER TO THE ROOF, CONNECTED TO CEF-1, CEF-2 & CEF-3 EXHAUST DUCT TO BE FURNISHED WITH A WEATHER CAP
4. 8" EXHAUST DUCT RISER TO THE ROOF, CONNECTED TO CEF-4 & CEF-5 EXHAUST DUCT TO BE FURNISHED WITH A WEATHER CAP
5. 2"VTR FOR PLUMBING FIXTURES. REFER TO P1.0 FOR PLUMBING CONTINUATION
6. (N) ROOF MOUNTED OUTDOOR UNIT TO BE INSTALLED PER DETAIL 'C'/M0.2.

MECHANICAL ROOF PLAN

SCALE: 1/8" = 1'-0"

1" = 50'-0" 0 50 100 150
1" = 40'-0" 0 40 80 120
1" = 30'-0" 0 30 60 90
1" = 20'-0" 0 20 40 60
1/8" = 1'-0" 0 8 16 24
1/4" = 1'-0" 0 4 8 12

IDENTIFICATION STAMP
DIV. OF THE STATE ARCHITECT
APP: 02-123307 INC:
REVIEWED FOR
SS ☑ FLS ☑ ACS ☑
DATE: 10/15/2025

Owner:
WASHINGTON UNIFIED SCHOOL DISTRICT

WASHINGTON UNIFIED SCHOOL DISTRICT
7950 SOUTH ELM AVENUE
FRESNO, CA 93706

Project Name:
STUDENT SERVICES

Project Address:
WASHINGTON UNION HIGH SCHOOL
6041SOUTH ELM AVENUE
FRESNO, CA 93706

integrated designs
by SOMAM, Inc.

ARCHITECTURE
ENGINEERING
INTERIOR DESIGN

6011 N. FRESNO STREET, SUITE 130
FRESNO CALIFORNIA 93710
P:(559) 436-0881 F:(559) 436-0887
E: design@somam.com
integrateddesigns.com

Ownership of Documents
This document, the ideas and designs incorporated herein, as an instrument of Professional Service is the property of Integrated Designs by SOMAM Inc. and is not to be used, in whole or in part for any other project without written authorization.
© COPYRIGHT 2020

Stamp:
REGISTERED PROFESSIONAL ENGINEER
JOELON D. CHIN
No. M35784
Exp. 03-31-26
MECHANICAL
STATE OF CALIFORNIA

Sheet Title:
MECHANICAL ROOF PLAN

Job No.: 5613

Sheet No.: M1.1

Release:

JNL MECHANICAL DESIGN
11156 BUSINESS ROUTE 41
SUITE #105B
MADERA, CA 93636

CERTIFICATE OF COMPLIANCE - NONRESIDENTIAL PERFORMANCE COMPLIANCE METHOD	NRCC-PRF-E
Nonresidential Performance Compliance Method	(Page 1 of 18)
Project Name: Washington Union High School	Date Prepared: 2025-02-27

A. General Information

1	Project Name	Washington Union High School			
2	Run Title	Title 24 Analysis			
3	Project Location	6041 SOUTH ELM AVENUE			
4	City	FRESNO	5	Standards Version	Compliance 2022
6	Zip code	93706	7	Compliance Software (version)	EnergyPro 9.3
8	Climate Zone	13	9	Building Orientation (deg)	0
10	Building Type(s)	• Nonresidential	11	Weather File	FRESNO-YOSEMITE_STYP20.epw
12	Project Scope	• New complete scope	13	Number of Dwelling Units	0
14	Total Conditioned Floor Area in Scope (ft^2)	8156	15	Total # of hotel/motel rooms	0
16	Total Unconditioned Floor Area (ft^2)	0	17	Fuel Type	Natural gas
18	Nonresidential Conditioned Floor Area	8156	19	Total # of Stories (Habitable Above Grade)	1
20	Residential Conditioned Floor Area	0			

CERTIFICATE OF COMPLIANCE - NONRESIDENTIAL PERFORMANCE COMPLIANCE METHOD	NRCC-PRF-E
Nonresidential Performance Compliance Method	(Page 2 of 18)

B. PROJECT SUMMARY

Table 8 shows which building components are included in the performance calculation. If indicated as not included, the project must show compliance prescriptively if within the permit application.

Building Components Complying via Performance						Building Components Complying Prescriptively	
Envelope (See Table G)	Nonres	Performance	Solar Thermal Water Heating (See Table I3)	☐	Performance	The following building components are ONLY eligible for prescriptive compliance and should be documented on the NRCC form listed if within the scope of the permit application (i.e. compliance will not be shown on the NRCC-PRF-E).	
	MultiFam	Not Included		☒	Not Included		
Mechanical (See Table H)	Nonres	Performance	Covered Process: Commercial Kitchens (see Table J)	☐	Performance	Indoor Lighting (Unconditioned) 140.6 & 170.2(e)	NRCC-LTI-E is required
	MultiFam	Not Included		☒	Not Included	Outdoor Lighting 140.7 & 170.2(e)	NRCC-LTO-E is required
Domestic Hot Water (See Table I)	Nonres	Performance	Covered Process: Laboratory Exhaust (see Table J)	☐	Performance	Sign Lighting 140.8 & 170.2(e)	NRCC-LTS-E is required
	MultiFam	Not Included		☒	Not Included	**Building Components Complying with Mandatory Measures**	
Lighting (Indoor Conditioned, see Table K)	Nonres	Performance	Photovoltaics (see Table F)	☐	Performance	Electrical power systems, commissioning, solar ready, elevator and escalator requirements are mandatory and should be documented on the NRCC form listed if applicable (i.e. compliance will not be shown on the NRCC-PRF-E.)	
	MultiFam	Not Included		☒	Not Included	Electrical Power Distribution 110.11	NRCC-ELC-E is required
			Battery (see Table F)	☐	Performance	Commissioning 120.8	NRCC-CXR-E is required
				☒	Not Included	Solar and Battery 110.10	NRCC-SAB-E is required

CERTIFICATE OF COMPLIANCE - NONRESIDENTIAL PERFORMANCE COMPLIANCE METHOD	NRCC-PRF-E
Nonresidential Performance Compliance Method	(Page 3 of 18)

C1. COMPLIANCE SUMMARY

	COMPLIES[3]		
	Time Dependent Valuaton (TDV)		Source Energy Use
	Efficiency[1] (kBtu/ft^2 - yr)	Total[2] (kBtu/ft^2 - yr)	Total[2] (kBtu/ft^2 - yr)
Standard Design	209.5	209.5	15.65
Proposed Design	201.75	201.75	15.11
Compliance Margins	**7.75**	**7.75**	**0.54**
	Pass	**Pass**	**Pass**

[1] Efficiency measures include improvements like a better building envelope and more efficient equipment
[2] Compliance Totals include efficiency, photovoltaics and batteries
[3] New Construction, Complete Addition Scope: Building complies when all effciency and total compliance margins are greater than or equal to zero and unmet load hour limits are not exceeded
Existing, Addition and Alteration Scope: Building complies when efficiency compliance margin is greater than or equal to zero and unmet load hour limits are not exceeded

CERTIFICATE OF COMPLIANCE - NONRESIDENTIAL PERFORMANCE COMPLIANCE METHOD	NRCC-PRF-E
Nonresidential Performance Compliance Method	(Page 4 of 18)

C2. TDV ENERGY COMPLIANCE RESULTS FOR PERFORMANCE COMPONENTS (Annual TDV Energy Use, kBtu/ft^2 - yr)

	COMPLIES[2]		
Energy Component	Standard Design (TDV)	Proposed Design (TDV)	Compliance Margin (TDV)[1]
Space Heating	16.03	15.14	0.89
Space Cooling	79.34	84.22	-4.88
Indoor Fans	73.27	57.92	15.35
Heat Rejection	0	0	0
Pumps & Misc.	0	0	0
Domestic Hot Water	7.18	10.79	-3.61
Indoor Lighting	33.68	33.68	0
Flexibility	---	---	---
EFFICIENCY COMPLIANCE TOTAL	**209.5**	**201.75**	**7.75 (3.7%)**
Photovoltaics	---	---	---
Batteries	---	---	---
TOTAL COMPLIANCE	**209.5**	**201.75**	**7.75 (3.7%)**

[1] Notes: This number in parenthesis following the Compliance Margin in column 4, represents the Percent Better than Standard.

CERTIFICATE OF COMPLIANCE - NONRESIDENTIAL PERFORMANCE COMPLIANCE METHOD	NRCC-PRF-E
Nonresidential Performance Compliance Method	(Page 5 of 18)

C3. TDV ENERGY RESULTS FOR NON-REGULATED COMPONENTS[1]

Non-Regulated Energy Component	Standard Design (TDV)	Proposed Design (TDV)	Compliance Margin (TDV)[1]
Receptacle	103.1	103.1	---
Process	---	---	---
Other Ltg	---	---	---
Process Motors	---	---	---
TOTAL (TOTAL COMPLIANCE + NON-REGULATED COMPONENTS)	**312.6**	**304.85**	**7.75 (2.5%)**

[1] Notes: This table is not used for Energy Code Compliance.

CERTIFICATE OF COMPLIANCE - NONRESIDENTIAL PERFORMANCE COMPLIANCE METHOD	NRCC-PRF-E
Nonresidential Performance Compliance Method	(Page 6 of 18)

C4. SOURCE ENERGY COMPLIANCE RESULTS FOR PERFORMANCE COMPONENTS (Annual SOURCE Energy Use, kBtu/ft^2 /yr)

	COMPLIES[2]		
Energy Component	Standard Design (SOURCE)	Proposed Design (SOURCE)	Compliance Margin (SOURCE)[1]
Space Heating	2.34	2.18	0.16
Space Cooling	3.6	3.83	-0.23
Indoor Fans	6.5	5.49	1.01
Heat Rejection	0	0	0
Pumps & Misc.	0	0	0
Domestic Hot Water	0.59	0.99	-0.4
Indoor Lighting	2.62	2.62	0
Flexibility	---	---	---
EFFICIENCY COMPLIANCE TOTAL	**15.65**	**15.11**	**0.54 (3.5%)**
Photovoltaics	---	---	---
Batteries	---	---	---
TOTAL COMPLIANCE	**15.65**	**15.11**	**0.54 (3.5%)**

[1] Notes: This number in parenthesis following the Compliance Margin in column 4, represents the Percent Better than Standard.

CERTIFICATE OF COMPLIANCE - NONRESIDENTIAL PERFORMANCE COMPLIANCE METHOD	NRCC-PRF-E
Nonresidential Performance Compliance Method	(Page 7 of 18)

C5. SOURCE ENERGY RESULTS FOR NON-REGULATED COMPONENTS[1]

Non-Regulated Energy Component	Standard Design (SOURCE)	Proposed Design (SOURCE)	Compliance Margin (SOURCE)[1]
Receptacle	7.55	7.55	---
Process	---	---	---
Other Ltg	---	---	---
Process Motors	---	---	---
TOTAL (TOTAL COMPLIANCE + NON-REGULATED COMPONENTS)	**23.2**	**22.66**	**0.54 (2.3%)**

[1] Notes: This table is not used for Energy Code Compliance.

C6. 'ABOVE CODE' QUALIFICATIONS

☐ This project is pursuing CalGreen Tier 1 ☐ This project is pursuing CalGreen Tier 2

CERTIFICATE OF COMPLIANCE - NONRESIDENTIAL PERFORMANCE COMPLIANCE METHOD	NRCC-PRF-E
Nonresidential Performance Compliance Method	(Page 8 of 18)

C7. ENERGY USE SUMMARY

Energy Component	Standard Design Site (MWh)	Proposed Design Site (MWh)	Margin (MWh)	Standard Design Site (MBtu)	Proposed Design Site (MBtu)	Margin (MBtu)
Space Heating	3.9	3.7	0.2	---	---	---
Space Cooling	16.6	17.1	-0.5	---	---	---
Indoor Fans	19.8	16.6	3.2	---	---	---
Heat Rejection	---	---	---	---	---	---
Pumps & Misc.	---	---	---	---	---	---
Domestic Hot Water	2.3	3.4	-1.1	---	---	---
Indoor Lighting	11	11	0	---	---	---
Flexibility	---	---	---	---	---	---
EFFICIENCY TOTAL	**53.6**	**51.8**	**1.8**	**0**	**0**	**0**
Photovoltaics	---	---	---	---	---	---
Batteries	---	---	---	---	---	---
ENERGY USE SUBTOTAL	**53.6**	**51.8**	**1.8**	**0**	**0**	**0**
Receptacle	34.9	34.9	0	---	---	---
Process	---	---	---	---	---	---
Other Ltg	---	---	---	---	---	---
Process Motors	---	---	---	---	---	---
ENERGY USE TOTAL	**88.5**	**86.7**	**1.8**	**0**	**0**	**0**

CERTIFICATE OF COMPLIANCE - NONRESIDENTIAL PERFORMANCE COMPLIANCE METHOD	NRCC-PRF-E
Nonresidential Performance Compliance Method	(Page 9 of 18)

C8. ENERGY USE INTENSITY (EUI)

	Standard Design (kBtu/ft^2 / yr)	Proposed Design (kBtu/ft^2 / yr)	Margin (kBtu/ft^2 / yr)	Margin Percentage
GROSS EUI[1]	37.02	36.27	0.75	2.03
NET EUI[1]	37.02	36.27	0.75	2.03

[1] Notes: Gross EUI is Energy Use Total (not including PV)/Total Building Area. Net EUI is Energy Use Total (including PV)/Total Building Area.

D1. EXCEPTIONAL CONDITIONS

• The project uses the Simplified Geometry Performance Modeling Approach which is not capable of modeling daylighting controls and assumes the prescriptive Secondary Daylit Control requirements are met. PRESCRIPTIVE COMPLIANCE documentation (form NRCC-LTI-02-E) for the requirements of section 140.6(d) Automatic Daylighting Controls in Secondary Daylit Zones is required.
• Project is claiming Exception 2 to Section 140.10(a): No PV system is required where the required PV system size is less than 4 kWdc.
• Project is claiming Exception 2 to Section 140.10(b): No battery storage system is required in buildings with battery storage system requirements with less than 10 kWh rated capacity.

G1. ENVELOPE GENERAL INFORMATION (conditioned spaces only)

01	02	03	04
Opaque Surfaces & Orientation	Total Gross Surface Area (ft^2)	Total Fenestration Area (ft^2)	Window to Wall Ratio (%)
North-Facing[1]	1430	150	10.49
East-Facing[2]	1637.5	140	8.55
South-Facing[3]	1800	24	1.33
West-Facing[4]	2050	96	4.68
Total	**6917.5**	**410**	**5.93**

Notes
[1]North-Facing is oriented to within 45 degrees of true north, including 45 00'00" east of north (NE), but excluding 45 00'00" west of north (NW),
[2]East-Facing is oriented to within 45 degrees of true east, including 45 00'00" south of east (SE), but excluding 45 00'00" north of east (NE),
[3]South-Facing is oriented to within 45 degrees of true south, including 45 00'00" west of south (SW), but excluding 45 00'00" east of south (SE),
[4]West-Facing is oriented to within 45 degrees of true west, including 45 00'00" north of west (NW), but excluding 45 00'00" south of west (SW),

1" = 50'-0" 1" = 40'-0" 1" = 30'-0" 1" = 20'-0" 1/8" = 1'-0" 1/4" = 1'-0"

MECHANICAL TITLE 24

SCALE: N.T.S.

IDENTIFICATION STAMP
DIV. OF THE STATE ARCHITECT
APP: 02-123307 INC:
REVIEWED FOR
SS ☑ FLS ☑ ACS ☑
DATE: 10/15/2025

Owner:
WASHINGTON UNIFIED SCHOOL DISTRICT

WASHINGTON UNIFIED SCHOOL DISTRICT
7950 SOUTH ELM AVENUE
FRESNO, CA 93706

Project Name:
STUDENT SERVICES

Project Address:
WASHINGTON UNION HIGH SCHOOL
6041SOUTH ELM AVENUE
FRESNO, CA 93706

integrated designs
by SOMAM, Inc.

ARCHITECTURE
ENGINEERING
INTERIOR DESIGN

6011 N. FRESNO STREET, SUITE 130
FRESNO CALIFORNIA 93710
P:(559) 436-0881 F:(559) 436-0887
E: design@somam.com
integrateddesigns.com

Ownership of Documents
This document, the ideas and designs incorporated herein, as an instrument of Professional Service is the property of Integrated Designs by SOMAM Inc. and is not to be used, in whole or in part for any other project without written authorization.
© COPYRIGHT 2020

Stamp:
REGISTERED PROFESSIONAL ENGINEER
JOELON D. CHAN
No. M35784
Exp. 03-31-26
MECHANICAL
STATE OF CALIFORNIA

Sheet Title:
MECHANICAL TITLE 24

Job No.: 5613

Sheet No.: M2.0

Release:

JNL MECHANICAL DESIGN
11156 BUSINESS ROUTE 41
SUITE #105B
MADERA, CA 93636

F:_JNL 2025 jobs\25018 Washington Union - Student Services\04-Drawings\Washington Union M Sheets.dwg JOELON 9/19/25

G1. ENVELOPE GENERAL INFORMATION (conditioned spaces only)

01	02	03	04
Opaque Surfaces & Orientation	Total Gross Surface Area (ft²)	Total Fenestration Area (ft²)	Window to Wall Ratio (%)
Roof	8156	333	4.08

Notes
[1]*North-Facing is oriented to within 45 degrees of true north, including 45 00'00" east of north (NE), but excluding 45 00'00" west of north (NW),*
[2]*East-Facing is oriented to within 45 degrees of true east, including 45 00'00" south of east (SE), but excluding 45 00'00" north of east (NE),*
[3]*South-Facing is oriented to within 45 degrees of true south, including 45 00'00" west of south (SW), but excluding 45 00'00" east of south (SE),*
[4]*West-Facing is oriented to within 45 degrees of true west, including 45 00'00" north of west (NW), but excluding 45 00'00" south of west (SW).*

G4. NONRESIDENTIAL AIR BARRIER

01	02
Building Story Name	Air Barrier
Com-Floor 1	No air barrier

G5. OPAQUE SURFACE ASSEMBLY SUMMARY

01	02	03	04	05	06		07	08	09	10
Surface Name	Construction Type	Area (ft²)	Framing Type	Cavity R-Value	Continuous R-Value		Units	Value	Description of Assembly Layers	Status[1]
					Interior	Exterior				
Slab On Grade8	Underground Floor	8,156	N/A	0	N/A	N/A	F-factor	0.73	Slab Type =Unheated slab on grade Insulation Orientation =None Insulation R-Value =none	N
R-38 Roof Attic10	Roof	8,156	Wood	38	N/A	N/A	U-factor	0.0329	AsphaltShingles0_25In Vapor permeable felt - 1/8 in. Plywood - 1/2 in. Air - Cavity - Wall Roof Ceiling - 4 in. or more Composite-1 Gypsum Board - 1/2 in.	N
R-19 Wall12	Exterior Wall	6,267.5	Wood	19	N/A	N/A	U-factor	0.0723	Stucco - 7/8 in. Vapor permeable felt - 1/8 in. Composite-2 Gypsum Board - 1/2 in.	N
INTERIOR WALL25	Interior Wall	1,250.5	Wood	19	N/A	N/A	U-factor	0.0705	Composite-3 Gypsum Board - 1/2 in.	N
R-21 Wall121	Interior Wall	156	Wood	21	N/A	N/A	U-factor	0.0659	Stucco - 7/8 in. Vapor permeable felt - 1/8 in. Composite-4 Gypsum Board - 1/2 in.	N
R-21 Wall1211	Exterior Wall	310	Wood	21	N/A	N/A	U-factor	0.0691	Stucco - 7/8 in. Vapor permeable felt - 1/8 in. Composite-4 Gypsum Board - 1/2 in.	N
8 CMU Wall153	Exterior Wall	340	N/A	0	N/A	N/A	U-factor	0.3794	Concrete - Part Grouted and Empty - 125 lb/ft3 - 8 in.	N

[1] *Status: N - New, A - Altered, E - Existing*

G6A. OPAQUE DOOR SUMMARY (NONRESIDENTIAL)

01	02	03	04
Assembly Name	Area (ft²)	Overall U-factor	Status[1]
Insulated Door14	629	0.2	N

[1] *Status: N - New, A - Altered, E - Existing*

G7A. FENESTRATION ASSEMBLY SUMMARY (NONRESIDENTIAL)

01	02	03	04	05	06	07	08	09
Fenestration Assembly Name	Fenestration Type/ Product Type / Frame Type	Certification Method[1]	Assembly Method	Area (ft²)	Overall U-factor	Overall SHGC	Overall VT	Status[2]
Residential Cooling	Vertical fenestration Fixed window N/A	NFRC	Manufactured	410	0.3	0.23	0.5	N
copy of Residential Cooling	Skylight Fixed window N/A	NFRC	Manufactured	333	0.3	0.23	0.5	N

[1] *Notes: Newly installed fenestration shall have a certified NFRC Label Certificate or use the CEC default tables found in Table 110.6-A and Table 110.6-B. Center of Glass (COG) values are for the glass-only, determined by the manufacturer, and are shown for ease of verification. Site-built fenestration values are calculated per Nonresidential Appendix NA6 and are used in the analysis.*
[2] *Status: N - New, A - Altered, E - Existing*

H1. DRY SYSTEM EQUIPMENT (FURNACES, AIR HANDLING UNITS, HEAT PUMPS, VRF, ECONOMIZERS ETC.)

01	02	03	04	05	06	07	08	09	10	11	12
			Heating				Cooling				
Equipment Name	Equipment Type	Qty	Total Heating Output (kBtu/h)	Supp Heat Output (kBtu/h)	Efficiency Unit	Efficiency	Total Cooling Output (kBtu/h)	Efficiency Unit	Efficiency	Economizer Type (if present)	Status[1]
RTU-1	Single Zone Heat Pump (SZHP) Air System	1	120.82	0	COP	3.5	111.38	EER	11.4	Fixed DB	N
RTU-2	Single Zone Heat Pump (SZHP) Air System	1	89.57	0	COP	3.5	111.38	EER	11.4	Fixed DB	N
RTU-3	Single Zone Heat Pump (SZHP) Air System	1	64.57	0	COP	3.5	66.25	EER	12	Fixed DB	N

[1] *Status: N - New, A - Altered, E - Existing*

H3. NONRESIDENTIAL / COMMON USE AREA FAN SYSTEMS SUMMARY

01	02	03	04	05	06	07	08	09	10	11	12	13
			Supply Fan				Return / Relief Fan					
Name or Item Tag	Qty	Design OA CFM	CFM	Power	Power Units	Control	Fan Type	CFM	Power	Power Units	Control	Status[1]
RTU-1	1	554.85	4,000	1.1	BHP	Constant Vol	N/A	N/A	N/A	N/A	N/A	N
RTU-2	1	363.9	3,000	1.1	BHP	Constant Vol	N/A	N/A	N/A	N/A	N/A	N
RTU-3	1	304.65	3,000	1.1	BHP	Constant Vol	N/A	N/A	N/A	N/A	N/A	N

[1] *Status: N - New, A - Altered, E - Existing*

H8. SYSTEM SPECIAL FEATURES

01	02	03	04
System Name	Equipment Type	Interlocks per 140.4(n)[1]	Other Special Features and Controls
RTU-1	Single Zone Heat Pump (SZHP) Air System	N/A	Fixed DB
RTU-2	Single Zone Heat Pump (SZHP) Air System	N/A	Fixed DB
RTU-3	Single Zone Heat Pump (SZHP) Air System	N/A	Fixed DB
WH-11 - SHW	Service Hot Water	N/A	Fixed Temperature Control

Notes: This table includes controls related to the performance path only. For projects using the prescriptive path, mandatory and prescriptive controls requirements are documented on the NRCC-MCH-E.
[1] *Yes = interlocks are provided, No = interlocks are not provided, NA means no operable openings.*

H9. NONRESIDENTIAL / COMMON USE AREA & HOTEL/MOTEL VENTILATION

01	02	03	04	05	06	07
	Mechanical Ventilation					
Zone Name	Ventilation Function	# of People	Supply OA CFM	Exhaust CFM	Conditioned Area (sf)	DCV or Occupant Sensor Controls, or Both
1-ZONE 1	Office - Office space	18.5	554.85	0	3699	N/A
2-ZONE 2	Office - Office space	12.13	363.9	0	2426	N/A
3-ZONE 3	Office - Office space	10.15	304.65	0	2031	N/A

H11. ZONAL SYSTEM AND TERMINAL UNIT SUMMARY

01	02	03	04	05	06	07	08	09	10	11	12
			Rated Capacity (kBtuh)		Airflow (cfm)				Fan		
System ID	System Type	Qty	Heating	Cooling	Design	Min.	Min. Ratio	Power	Power Units	Cycles	VSD
1-ZONE 1-Trm	Uncontrolled	1	N/A	N/A	4,000	N/A	0	N/A	N/A	N/A	☐
2-ZONE 2-Trm	Uncontrolled	1	N/A	N/A	3,000	N/A	0	N/A	N/A	N/A	☐
3-ZONE 3-Trm	Uncontrolled	1	N/A	N/A	3,000	N/A	0	N/A	N/A	N/A	☐

I1. WATER HEATER EQUIPMENT SUMMARY

01	02	03	04	05	06	07	08	09	10	11	12	13	14
Name	Heater Element Type	Tank Type	Qty	Tank Vol (gal)	Rated Input	Rated Input Unit	Efficiency	Efficiency Unit	Tank Insulation R-value Int/Ext	Standby Loss Fraction	1st Hr. Rating or Flow Rate (gal)	Heat Pump Type	Tank Location or Ambient Condition
Bradford White Electrifie2	Electricity	Storage	1	80	26.99	kW	0.98	TE	N/A	0.01	N/A	N/A	N/A

K1. INDOOR CONDITIONED LIGHTING GENERAL INFO

01	02	03	04	05	06
				Additional (Custom) Allowance	
Occupancy Type[1]	Conditioned Floor Area[2] (ft²)	Installed Lighting Power (Watts)	Lighting Control Credits (Watts)	Area Category Footnotes (Watts)	Area Category Footnotes (Watts)
Office (250 square feet)	8156	4893.6	0	0	0
Building Totals:	8156	4893.6	0	0	0

[1] *See Table 140.6-C*
[2] *See NRCC-LTI-E for unconditioned spaces*
[3] *Lighting information for existing spaces modeled is not included in this table*

K4. INDOOR CONDITIONED LIGHTING MANDATORY LIGHTING CONTROL

Building Level Controls

01	02
Mandatory Demand Response 110.12(c)	Shut-Off Controls 130.1(c) & 160.5(b)4C
Required	Required

Area Level Controls (includes all lighting controls installed in conditioned space to meet mandatory requirements per 130.1)

03	04	05	06	07	08	09
Area Description	Area Category Primary Function Area	Area Controls 130.1(a) & 160.5(b)4A	Multi-Level Controls 130.1(b) & 160.5(b)4B	Shut-Off Controls 130.1(c) & 160.5(b)4C	Primary Daylighting 130.1(d) & 160.5(b)4D	Secondary Daylighting 140.5(d) & 160.5(b)4D

Whole Building	All Other Space Types	Required	Required	Required	Required	Required

L. DECLARATION OF REQUIRED CERTIFICATES OF INSTALLATION

Selections made by Documentation Author indicate which Certificates of Installation must be submitted for the features to be recognized for compliance. These documents must be retained and provided to the building inspector during construction and can be found online

Building Component	Form/Title
Envelope	NRCI-ENV-01-E - Must be submitted for all buildings
Envelope	NRCI-ENV-E - Envelope (for all buildings)
Mechanical	NRCI-MCH-01-E - Must be submitted for all buildings
Mechanical	NRCI-MCH-E - For all buildings with Mechanical Systems
Plumbing	NRCI-PLB-01-E - Must be submitted for all buildings
Plumbing	NRCI-PLB-E - For all buildings with Plumbing Systems
Indoor Lighting	NRCI-LTI-01-E - Must be submitted for all buildings
Indoor Lighting	NRCI-LTI-E - Indoor Lighting (for all buildings)

M. DECLARATION OF REQUIRED CERTIFICATES OF ACCEPTANCE

Selections made by Documentation Author indicate which Certificates of Acceptance must be submitted for the features to be recognized for compliance. These documents must be provided to the building inspector during construction and must be completed through an Acceptance Test Technician Certification Provider (ATTCP).

Building Component	Form/Title & System Name(s)
Envelope	NRCA-ENV-02-F - NRFC label verification for fenestration
Indoor Lighting	NRCA-LTI-02-A - Occupancy Sensors and Automatic Time Switch Controls.
Indoor Lighting	NRCA-LTI-03-A - Automatic Daylight Controls.
Mechanical	NRCA-MCH-02-A - Outdoor Air must be submitted for all newly installed HVAC units. Note: MCH-02-A can be performed in conjunction with MCH-07-A Supply Fan VFD Acceptance (if applicable) since testing activities overlap
	RTU-1, RTU-2 and RTU-3.
Mechanical	NRCA-MCH-03-A - Constant Volume Single Zone HVAC
	RTU-1, RTU-2 and RTU-3.
Mechanical	NRCA-MCH-05-A - Air Economizer Controls
	RTU-1, RTU-2 and RTU-3.
Mechanical	NRCA-MCH-12-A FDD for Packaged Direct Expansion Units
	RTU-1, RTU-2 and RTU-3.

N. DECLARATION OF REQUIRED CERTIFICATES OF VERIFICATION

Selections made by Documentation Author indicate which Certificates of Verification must be submitted for the features to be recognized for compliance. These documents must be retained and provided to the building inspector during construction and can be found online

There are no Certificates of Verification applicable to this project

Documentation Author's Declaration Statement

1. I certify that this Certificate of Compliance documentation is accurate and complete.

Documentation Author Name: Joelon Chinn	Documentation Author Signature:
Company: JNL Mechanical Design	Signature Date: 2/27/2025
Address: 2050 N. Winery #101	CEA/HERS Certification Identification (if applicable): M35784
City/State/Zip: Fresno, CA 93703	Phone: 559-656-1160

Responsible Person's Declaration statement

I certify the following under penalty of perjury, under the laws of the State of California:

1. The information provided on this Certificate of Compliance is true and correct.
2. I am eligible under Division 3 of the Business and Professions Code to accept responsibility for the building design or system design identified on this Certificate of Compliance (responsible designer)
3. The energy features and performance specifications, materials, components, and manufactured devices for the building design or system design identified on this Certificate of Compliance conform to the requirements of Title 24, Part 1 and Part 6 of the California Code of Regulations.
4. The building design features or system design features identified on this Certificate of Compliance are consistent with the information provided on other applicable compliance documents, worksheets, calculations, plans and specifications submitted to the enforcement agency for approval with this building permit application.
5. I understand that a registered copy of this Certificate of Compliance shall be made available with the building permit(s) issued for the building, and made available to the enforcement agency for all applicable inspections, and I will take the necessary steps to accomplish this requirement.
6. I understand that a registered copy of this Certificate of Compliance is required to be included with the documentation the builder provides to the building owner at occupancy, and I will take the necessary steps to accomplish these requirements.

Responsible Designer Name: Joelon Chin	Responsible Designer Signature:	
Company: JNL Mechanical Design		
Address: 11156 Highway 41, STE #105B	Date Signed: 2/27/2025	
City/State/Zip: Madera, Ca 93636	License #: M35784	
Phone: 559-656-1170	Title:	Scope:

MECHANICAL TITLE 24

SCALE: N.T.S.

JNL MECHANICAL DESIGN
11156 BUSINESS ROUTE 41
SUITE #105B
MADERA, CA 93636

F:_JNL 2025 jobs\25018 Washington Union - Student Services\04-Drawings\Washington Union M Sheets.dwg JOELON 9/19/25

IDENTIFICATION STAMP
DIV. OF THE STATE ARCHITECT
APP: 02-123307 INC:
REVIEWED FOR
SS ☑ FLS ☑ ACS ☑
DATE: 10/15/2025

Owner:
WASHINGTON UNIFIED SCHOOL DISTRICT
7950 SOUTH ELM AVENUE
FRESNO, CA 93706

Project Name:
STUDENT SERVICES

Project Address:
WASHINGTON UNION HIGH SCHOOL
6041SOUTH ELM AVENUE
FRESNO, CA 93706

integrated designs
by SOMAM, Inc.
ARCHITECTURE
ENGINEERING
INTERIOR DESIGN
6011 N. FRESNO STREET, SUITE 130
FRESNO CALIFORNIA 93710
P:(559) 436-0881 F:(559) 436-0887
E: design@somam.com
integrateddesigns.com

Ownership of Documents
This document, the ideas and designs incorporated herein, as an instrument of Professional Service is the property of Integrated Designs by SOMAM Inc. and is not to be used, in whole or in part for any other project without written authorization.
© COPYRIGHT 2020

Stamp:
REGISTERED PROFESSIONAL ENGINEER
JOELON D. CHINN
No. M35784
Exp. 03-31-26
MECHANICAL
STATE OF CALIFORNIA

Sheet Title:
MECHANICAL TITLE 24

Job No.:
5613

Sheet No.:
M2.1

Release:

1" = 50'-0" 1" = 40'-0" 1" = 30'-0" 1" = 20'-0" 1/8" = 1'-0" 1/4" = 1'-0"

FIXTURE SCHEDULE

FIXTURE SYMBOL (3-A-50): 3 = CIRCUIT NUMBER, A = FIXTURE TYPE, 50 = FIXTURE WATTAGE

TYPE	WATTS	LAMPS	VOLT	MANUFACTURER	CATALOG NO.	MOUNT	NOTES		WEIGHT
A	50	L.E.D.	MVOLT	LITHONIA	EPANL 2x4-6000LM-80CRI-40K-MIN1-EZT-MVOLT	T-BAR	DETAIL #1/E7.01		15 LBS
AE	50	L.E.D.		LITHONIA	EPANL 2x4-6000LM-80CRI-40K-MIN1-EZT-MVOLT-E10WCP	T-BAR	DETAIL #1/E7.01	(1)	15 LBS
B	38	L.E.D.		LITHONIA	EPANL 2x4-4000LM-80CRI-40K-MIN1-EZT-MVOLT	T-BAR	DETAIL #1/E7.01		15 LBS
BE	38	L.E.D.		LITHONIA	EPANL 2x4-4000LM-80CRI-40K-MIN1-EZT-MVOLT-E10WCP	T-BAR	DETAIL #1/E7.01	(1)	15 LBS
C	45	L.E.D.		LITHONIA	EPANL 2x2-4800LM-80CRI-40K-MIN-EZT-MVOLT	T-BAR	DETAIL #1/E7.01		7.4 LBS
CE	45	L.E.D.		LITHONIA	EPANL 2x2-4800LM-80CRI-40K-MIN-EZT-MVOLT-E10WCP	T-BAR	DETAIL #1/E7.01	(1)	7.4 LBS
D	15	L.E.D.		GOTHAM	EVOS-40/15-AR-LSS-WD-MVOLT-EZ1	RECESSED	DETAIL #2/E7.01		8 LBS
DE	15	L.E.D.		GOTHAM	EVOS-40/15-AR-LSS-WD-MVOLT-EZ1-E10WCP	RECESSED	DETAIL #2/E7.01	(1)	8 LBS
F	20	L.E.D.		GOTHAM	EVOS-40/20-AR-LSS-WD-MVOLT-EZ1	RECESSED	DETAIL #2/E7.01		8 LBS
FE	20	L.E.D.		GOTHAM	EVOS-40/20-AR-LSS-WD-MVOLT-EZ1-E10WCP	RECESSED	DETAIL #2/E7.01	(1)	8 LBS
G	35	L.E.D.		LITHONIA	STL4-40L-EZ1-LP840-N100	SURFACE	DETAIL #3/E7.01		13 LBS
GE	35	L.E.D.		LITHONIA	STL4-40L-EZ1-LP840-N100-E10WLCP	SURFACE	DETAIL #3/E7.01	(1)	13 LBS
HE	45	L.E.D.		LITHONIA	STL4-48L-EZ1-LP840-N100-E10WLCP	SURFACE	DETAIL #3/E7.01	(1)	13 LBS
J	53	L.E.D.		MARK ARCHITECTURAL	S4PD-LLP-8FT-MSL8-40K-80CRI-600LMF-SCT-MN1-MVOLT-SLVT-NLIGHT-ADPT	PENDANT	DETAIL #7/E7.03	(4), (6)	8 LBS
K7	11	L.E.D.	120-277V	DURA LAMP	DL-ES-15-1-40-HC-24-A-P01E-S-PF-100	COVE	7 FT RUN	(3), (8)	0.5 LBS
K10	15	L.E.D.	120-277V	DURA LAMP	DL-ES-15-1-40-HC-24-A-P01E-S-PF-100	COVE	10 FT RUN	(3), (8)	0.75 LBS
K16	24	L.E.D.	120-277V	DURA LAMP	DL-ES-15-1-40-HC-24-A-P01E-S-PF-100	COVE	16 FT RUN	(3), (8)	1.25 LBS
K18	27	L.E.D.	120-277V	DURA LAMP	DL-ES-15-1-40-HC-24-A-P01E-S-PF-100	COVE	18 FT RUN	(3), (8)	1.25 LBS
K24	36	L.E.D.	120-277V	DURA LAMP	DL-ES-15-1-40-HC-24-A-P01E-S-PF-100	COVE	24 FT RUN	(3), (8)	1.75 LBS
L	45	L.E.D.	120-277V	PINNACLE	F36D-A-840LO-AC3120ST-U-FSD-1-0-W-ENLC	PENDANT	DETAIL #8/E7.03	(5)	47 LBS
M14	9	L.E.D.	120-277V	PINNACLE	F14D-A-840LO-FL-U-FSD-1-0-W-ENLC-RGBW	WALL	DETAIL #9/E7.03	(7)	15 LBS
M18	13	L.E.D.	120-277V	PINNACLE	F18D-A-840LO-FL-U-FSD-1-0-W-ENLC-RGBW	WALL	DETAIL #9/E7.03	(7)	20 LBS
M24	17	L.E.D.	120-277V	PINNACLE	F24D-A-840LO-FL-U-FSD-1-0-W-ENLC-RGBW	WALL	DETAIL #9/E7.03	(7)	25 LBS
N1	7	L.E.D.	MVOLT	GOTHAM	EVOS-40/05-AR-LSS-WD-MVOLT-EZ1	RECESSED	DETAIL #2/E7.01		8 LBS
N2	7	L.E.D.	MVOLT	LITHONIA	BWLP2-8L-ADP-MVOLT LP840	SURFACE	DETAIL #3/E7.01		10 LBS
P	15	L.E.D.	MVOLT	GOTHAM	EVOELW-40/15-AR-LSS-MVOLT	RECESSED	DETAIL #2/E7.01 EXTERIOR	(2)	8 LBS
Q	10	L.E.D.		GOTHAM	EVO6VR-40/10-AR-WD LSS-MVOLT	RECESSED	DETAIL #2/E7.01 EXTERIOR	(2)	8 LBS
QE	10	L.E.D.		GOTHAM	EVO6VR-40/10-AR-WD LSS-MVOLT-E10WCPR	RECESSED	DETAIL #2/E7.01 EXTERIOR	(1), (2)	8 LBS
WL	25	L.E.D.	120V	LITHONIA	ARV13-CRV-NDDIM-25W 3RK-120-CLP-BLK-PC-SHCAB-25'	WALL	DETAIL #11/E7.03 EXTERIOR		8 LBS
X	2	L.E.D.		LITHONIA	LE-S-W-1-R-120/277-EL N-SD	SURFACE	.	(8)	5 LBS

FIXTURE SCHEDULE NOTES:

(1) LIGHT FIXTURE SHALL BE EQUIPPED WITH AN EMERGENCY BATTERY PACK TO OPERATE THE L.E.D. DRIVER AT 10 WATTS OF CONSTANT POWER IN THE EMERGENCY MODE FOR A MINIMUM OF 90 MINUTES. PULL UNSWITCHED CIRCUIT TO EMERGENCY BATTERY PACK. REFER TO LIGHTING PLANS FOR EXACT LOCATIONS AND DETAIL PER R6/E7.01 FOR WIRING REQUIREMENTS.

(2) PROVIDE BAR HANGERS AS REQUIRED.

(3) PROVIDE WITH DL-W-45-MCH-4, DL-W-45-CVR-4-C MOUNTING OPTION AND 60W POWER SUPPLY PER 20 LINEAR FEET (DMLE-60T24-2UD). PROVIDE CORNER WIRING ATTACHMENTS FOR EACH COVE CORNER DL-2-LC-90.

(4) 12' SUSPENSION FROM TOP OF CEILING.

(5) ADJUST CABLE TO CANOPY SUCH THAT FIXTURE SITS FLUSH WITH BOARD.

(6) FULL CATALOG #S4PD-LLP-8FT-MSL8-80CRI-40K-600LMF-80CRI-40K-300LMF-SCT-MN1-FLL-MVOLT-SLVT-NLIGHT-ADPT-F2-36A-RDCY-WHTCY-WRCD

(7) PROVIDE FIXTURE WITH RGBW COLOR CHANGING OPTION.

(8) EXIT SIGNS & COVE LIGHTS LESS THAN 5 LBS. MOUNT AS REQUIRED PER MANUFACTURER RECOMMENDATIONS.

ELECTRICAL SYMBOLS NOTES:

(A) REFER TO FIRE ALARM DEVICES ELEVATION, DETAIL #1/E5.03 FOR RESPECTIVE MOUNTING HEIGHTS.

(B) AT EXTERIOR LOCATIONS, PROVIDE WEATHER-RESISTANT/TAMPER-RESISTANT G.F.C.I. DUPLEX RECEPTACLES, LEVITON #15362-WTW OR EQUAL. AT DAMP LOCATIONS, PROVIDE A DIECAST WEATHERPROOF LOCKABLE COVER, RACO #5028-0 OR EQUAL. AT WET LOCATIONS, PROVIDE A DIECAST WEATHERPROOF 'WHILE-IN-USE' LOCKABLE COVER, EXTRA-DUTY RATED, RED DOT #CKSUV OR EQUAL.

(C) DUPLEX RECEPTACLE SHALL HAVE PRINTED WORDING 'CONTROLLED' AND THE SPECIFIC SYMBOL ⏻ ON THE FACE OF THE RECEPTACLE. LEVITON #5362-2PE OR EQUAL.

(D) SHADED PORTION INDICATES THE ORIENTATION OF THE ILLUMINATED FACE (OR FACES, WHEN DOUBLE FACE) OF THE EXIT SIGN.

(E) ACUITY CONTROLS #CAT 5e " ,0' OR EQUAL. " ASTERISK INDICATES LENGTH OF CABLE. CABLES ARE AVAILABLE IN 6', 1', 2', 5', 10', 15', 30', AND 50' LENGTHS.

(F) LIBERTY WIRE CABLE, INC #18-2C-LVB OR EQUAL.

(G) 'nLIGHT' ENABLED LIGHT FIXTURE PER FIXTURE SCHEDULE ON SHEET #E0.01.

(H) ACUITY CONTROLS #WSD-PDT-WH OR EQUAL. PROVIDE A DECORATOR STYLE STAINLESS STEEL WALLPLATE.

(J) ACUITY CONTROLS/SENSOR SWITCH #WSX-PDT-2P-FAN OR EQUAL.

(K) ACUITY CONTROLS #nWSXA-PDT-LV-DX-WH OR EQUAL. PROVIDE A DECORATOR STYLE STAINLESS STEEL WALLPLATE.

(L) ACUITY CONTROLS #nPODMA-DX-WH OR EQUAL. PROVIDE A DECORATOR STYLE STAINLESS STEEL WALLPLATE.

(M) ACUITY CONTROLS #nPODMA-2P-DX-WH OR EQUAL. PROVIDE A DECORATOR STYLE STAINLESS STEEL WALLPLATE.

(N) ACUITY CONTROLS #nPODMA-4P-DX-WH OR EQUAL. PROVIDE A DECORATOR STYLE STAINLESS STEEL WALLPLATE.

(P) ACUITY CONTROLS #nP210-PL OR EQUAL. CONNECT TO THE SAME '120V UNSWITCHED' RECEPTACLE CIRCUIT, AS THE POWER/RELAY PACK CONTROLS.

(Q) ACUITY CONTROLS #nP16 OR EQUAL.

(R) ACUITY CONTROLS #nCM-PDT-10-RJB OR EQUAL.

(S) ACUITY CONTROLS #nCM-PDT-10-ADCX-RJB OR EQUAL.

(T) ACUITY CONTROLS #nECY-MVOLT-BAC-ADR-ENC-GFNX OR EQUAL. REFER TO DETAIL #4/E7.01 FOR ADDITIONAL INFORMATION.

(U) ACUITY CONTROLS #nBRG-8-KIT OR EQUAL. REFER TO DETAIL #8/E7.01 FOR ADDITIONAL INFORMATION. PROVIDE A 4' SQ. x 2 1/8' DEEP OUTLET BOX FOR MOUNTING OF NETWORK INTERFACE BRIDGE AND POWER SUPPLY.

(V) ACUITY CONTROLS #nGWY2-GFX AND 150ma POWER SUPPLY #PS150 OR EQUAL.

ELECTRICAL SYMBOLS
ALL DIMENSIONS TO CENTER OF BOX, U.O.N.

3-	CIRCUIT NUMBER (3-A-50)	
-A-	FIXTURE TYPE (3-A-50)	
-50	FIXTURE WATTAGE (3-A-50)	
	HOME RUN 3/4'C - MIN. (PANEL A, CIRCUIT #3)	
	CONDUIT RUN IN WALL OR ATTIC (1/2'C - 2 #12 AWG THWN + 1 #12 GND)	
	CONDUIT RUN IN FLOOR OR US (1/2'C - 2 #12 AWG THWN + 1 #12 GND)	
	ANY CONDUIT RUN - 1/2'C - 3 #12 AWG THWN + 1 #12 GND	
	" " - 3/4'C - 4 #12 AWG THWN + 1 #12 GND	
	" " - 3/4'C - 5 #12 AWG THWN + 1 #12 GND	
	" " - 1'C - 6 #12 AWG THWN + 1 #12 GND	
	CONDUIT STUB - CAPPED AND LABELED.	
1	ELECTRICAL KEYNOTE #1, REFER TO NOTES ON SAME SHEET.	
U.O.N.	UNLESS OTHERWISE NOTED	
W.P.	WEATHERPROOF	
	TERMINAL CABINET (SIZE AS SHOWN)	
	ELECTRICAL PANELBOARD	
	TAMPER-RESISTANT DUPLEX RECEPTACLE IN WALL (+15" MIN. TO BOTTOM OF BOX)	
	TAMPER-RESISTANT QUADRUPLEX RECEPTACLE IN WALL (+15" MIN. TO BOTTOM OF BOX)	
(B)	TAMPER-RESISTANT G.F.C.I. DUPLEX RECEPTACLE IN WALL (+15" MIN. TO BOTTOM OF BOX)	
(C)	TAMPER-RESISTANT 'CONTROLLED' DUPLEX RECEPTACLE IN WALL (+15" MIN. TO BOTTOM OF BOX)	
WP	TAMPER-RESISTANT G.F.C.I. DUPLEX RECEPTACLE SURFACE MOUNTED	
(D)	EXIT LIGHT, WALL MOUNTED	
(D)	EXIT LIGHT, CEILING MOUNTED	
	WALL MOUNTED LIGHT FIXTURE MOUNT AS SHOWN)	
	CEILING MOUNTED LIGHT FIXTURE	
	RECESSED MOUNTED LIGHT FIXTURE IN CEILING	
	RECESSED MOUNTED 'NIGHT' LIGHT FIXTURE IN CEILING (DUSK TO DAWN)	
	LIGHT FIXTURE	
(E)	- - C5 - - NETWORK CABLE - CATEGORY 5e CABLE, LENGTH AS REQUIRED	
(F)	- - DC - - 0-10V DIMMING CONTROL CABLE, LENGTH AS REQUIRED	
(G)	LIGHT FIXTURE WITH 'nLIGHT' EMBEDDED CONTROLS	
	EM RECESSED MOUNTED LIGHT FIXTURE EQUIPPED WITH EMERGENCY BATTERY PACK.	
	EM LIGHT FIXTURE EQUIPPED WITH EMERGENCY BATTERY PACK.	
	POLE MOUNTED 'AREA' LIGHT FIXTURE	
	$ LIGHT SWITCH (+4'-0" MAX. TO TOP OF BOX, U.O.N.)	
(H)	OS OCCUPANCY SENSOR WALL SWITCH, LINE VOLTAGE (+4'-0" MAX. TO TOP OF BOX, U.O.N.)	
(J)	OSF OCCUPANCY SENSOR WALL SWITCH WITH SEPARATE FAN CONTROL	
(K)	D20 OCCUPANCY SENSOR WALL SWITCH (DUAL TECHNOLOGY) WITH ON/OFF SWITCH AND RAISE/LOWER DIMMING CONTROL. (+4'-0" MAX. TO TOP OF BOX, U.O.N.)	
(L)	D ON/OFF SWITCH WITH RAISE/LOWER DIMMING CONTROL (+4'-0" MAX. TO TOP OF BOX, U.O.N.)	
(M)	D2 ON/OFF SWITCH WITH RAISE/LOWER DIMMING CONTROL (TWO CHANNELS) (+4'-0" MAX. TO TOP OF BOX, U.O.N.)	
(N)	D4 ON/OFF SWITCH WITH RAISE/LOWER DIMMING CONTROL (FOUR CHANNELS) (+4'-0" MAX. TO TOP OF BOX, U.O.N.)	
(P)	PPP LOW VOLTAGE POWER/RELAY PACK FOR RECEPTACLE CONTROLS MOUNTED IN ACCESSIBLE ATTIC SPACE, U.O.N.	
(Q)	PP LOW VOLTAGE POWER/RELAY PACK FOR LIGHTING CONTROLS MOUNTED IN ACCESSIBLE ATTIC SPACE, U.O.N.	
(R)	DOS 360° OCCUPANCY SENSOR (DUAL TECHNOLOGY), CEILING MOUNTED	
(S)	DSE 360° OCCUPANCY SENSOR (DUAL TECHNOLOGY) WITH AUTOMATIC DIMMING CONTROL, PHOTOCELL, CEILING MOUNTED	
(T)	NLC NETWORK LIGHTING CONTROLLER	
(U)	BRG NETWORK INTERFACE BRIDGE WITH POWER SUPPLY	
(V)	GFX GRAPHIC WALLPOD WITH POWER SUPPLY	
	J JUNCTION BOX EQUIPPED WITH BLANK COVER	
	J JUNCTION BOX EQUIPPED WITH BLANK COVER AND FLEX CONNECTION	
	COMBINATION HEAVY-DUTY FUSED SAFETY SWITCH/MAGNETIC STARTER	
	MOTOR	
	HEAVY-DUTY FUSED SAFETY SWITCH	
	SD ADDRESSABLE SMOKE DETECTOR MOUNTED ON CEILING	
	IM ISOLATOR MODULE	
	MM ADDRESSABLE MONITOR MODULE	
	DMM ADDRESSABLE DUAL MONITOR MODULE	
	RM ADDRESSABLE RELAY MODULE	
	F ADDRESSABLE MANUAL PULL STATION	
(A)	V 15 FIRE ALARM VISUAL STROBE, 15 CANDELA (WALL MOUNTED)	
(A)	V 30 FIRE ALARM VISUAL STROBE, 30 CANDELA (WALL MOUNTED)	
(A)	CV 15 FIRE ALARM VISUAL STROBE, 15 CANDELA, (CEILING MOUNTED)	
(A)	SV 30 FIRE ALARM SPEAKER/30 CANDELA VISUAL STROBE (WALL MOUNTED)	
(A)	SCV 15 FIRE ALARM SPEAKER/15 CANDELA VISUAL STROBE (CEILING MOUNTED)	
(A)	SCV 75 FIRE ALARM SPEAKER/75 CANDELA VISUAL STROBE (CEILING MOUNTED)	
	SP W.P. FIRE ALARM EXTERIOR SPEAKER IN WALL	
	WF WATERFLOW SWITCH AT FIRE SPRINKLER RISER	
	TS TAMPER SWITCH AT FIRE DEPT. CONNECTION 'F.D.C.'	
	B ELECTRIC BELL (FOR FIRE SPRINKLER RISER)	
	DD DUCT DETECTOR	
	FSD FIRE/SMOKE DAMPER BY DIVISION 23	
E, (E)	SUBSCRIPT DENOTES EXISTING SHALL REMAIN	
R, (R)	SUBSCRIPT DENOTES EXISTING SHALL BE REMOVED	
— EP —	DENOTES EXISTING FEEDER, BRANCH CIRCUITING AND/OR HOMERUN SHALL REMAIN	
— ER —	DENOTES EXISTING FEEDER, BRANCH CIRCUITING AND/OR HOMERUN SHALL BE REMOVED	

DIVISION OF THE STATE ARCHITECT APPLICABLE CODES AND STANDARDS

CODES:

2025	CALIFORNIA ADMINISTRATIVE CODE, PART 1, TITLE 24 C.C.R.
2022	CALIFORNIA BUILDING CODE (C.B.C.), PART 2, TITLE 24 C.C.R. (2021 INTERNATIONAL BUILDING CODE, VOLUMES 1 AND 2 WITH 2022 CALIFORNIA AMENDMENTS)
2022	CALIFORNIA ELECTRICAL CODE (C.E.C.), PART 3, TITLE 24 C.C.R. (2020 NFPA 70 NATIONAL ELECTRICAL CODE WITH 2022 CALIFORNIA AMENDMENTS)
2022	CALIFORNIA MECHANICAL CODE (C.M.C.), PART 4, TITLE 24 C.C.R. (2021 UNIFORM MECHANICAL CODE WITH 2022 CALIFORNIA AMENDMENTS)
2022	CALIFORNIA PLUMBING CODE (C.P.C.), PART 5, TITLE 24 C.C.R. (2021 UNIFORM PLUMBING CODE WITH 2022 CALIFORNIA AMENDMENTS)
2022	CALIFORNIA ENERGY CODE (CEnC), PART 6, TITLE 24 C.C.R.
2022	CALIFORNIA FIRE CODE (C.F.C.), PART 9, TITLE 24 C.C.R. (2021 INTERNATIONAL FIRE CODE WITH 2022 CALIFORNIA AMENDMENTS)
2022	CALIFORNIA REFERENCED STANDARDS CODE (C.R.S.C.), PART 12, TITLE 24 C.C.R.
	TITLE 19, C.C.R. PUBLIC SAFETY, STATE FIRE MARSHAL REGULATIONS.

STANDARDS AND GUIDES:

NFPA 72	NATIONAL FIRE ALARM CODE, 2022 EDITION (CALIFORNIA AMENDED)
ADAAG	AMERICANS WITH DISABILITIES ACT, ACCESSIBILITY GUIDELINES
UL 38	MANUAL ACTUATED SIGNALING BOXES, 1999 EDITION
UL 268	SMOKE DETECTORS FOR FIRE PROTECTIVE SIGNALING SYSTEMS, 2011 EDITION
UL 268A	SMOKE DETECTORS FOR DUCT APPLICATIONS, 2009 EDITION
UL 464	AUDIBLE SIGNAL APPLIANCES, 2003 EDITION
UL 521	HEAT DETECTORS FOR FIRE PROTECTIVE SIGNALING SYSTEMS, 1999 EDITION (WITH REVISIONS THROUGH JULY 2005)
UL 864	CONTROL UNITS FOR FIRE PROTECTIVE SIGNALING SYSTEMS, 2014 EDITION

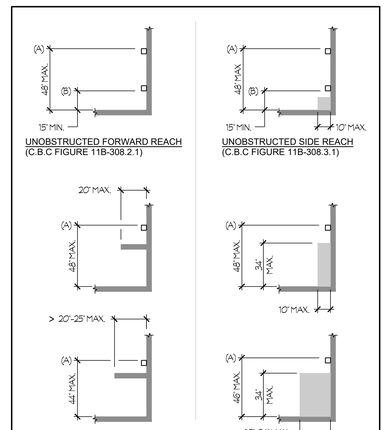

(A) TOP OF OUTLET BOX FOR RECEPTACLES, SWITCHES AND CONTROLS.

(B) BOTTOM OF OUTLET BOX FOR RECEPTACLES, SWITCHES AND CONTROLS.

1 ELECTRICAL RECEPTACLE, SWITCH AND CONTROL HEIGHTS

NTS

TITLE 24, PART 6

THE CALIFORNIA ENERGY EFFICIENCY STANDARDS FOR NONRESIDENTIAL BUILDINGS HAS BEEN REVIEWED AND THE BUILDING DESIGN DESCRIBED ON THESE PAGES IS IN SUBSTANTIAL CONFORMANCE.

CODE, RULES AND REGULATIONS

ALL WORK AND MATERIALS SHALL COMPLY WITH THE LATEST REGULATIONS OF THE STATE FIRE MARSHAL, CALIFORNIA CODE OF REGULATIONS, SERVING UTILITY COMPANIES AND OTHER APPLICABLE STATE ORDINANCES. NOTHING IN THESE PLANS OR SPECIFICATIONS IS TO BE CONSTRUED AS TO PERMIT WORK NOT CONFORMING TO THESE CODES. WHERE WORK OF A HIGHER DEGREE IS INDICATED IN THE PLANS OR SPECIFICATIONS THIS REQUIREMENT SHALL GOVERN.

SEISMIC ANCHORAGE REQUIREMENTS

MECHANICAL, ELECTRICAL AND PLUMBING ANCHORAGE NOTE

ALL MECHANICAL, PLUMBING AND ELECTRICAL COMPONENTS SHALL BE ANCHORED AND INSTALLED PER THE DETAILS ON THE DSA APPROVED CONSTRUCTION DOCUMENTS. THE FOLLOWING COMPONENTS SHALL BE ANCHORED OR BRACED TO MEET THE FORCE AND DISPLACEMENT REQUIREMENTS PRESCRIBED IN THE 2022 CBC, SECTIONS 1617A.1.18 THROUGH 1617A.1.26 AND ASCE 7-16 CHAPTERS 13, 26 AND 30.

1. ALL PERMANENT EQUIPMENT AND COMPONENTS.
2. TEMPORARY, MOVABLE OR MOBILE EQUIPMENT THAT IS PERMANENTLY ATTACHED (e.g. HARD WIRED) TO THE BUILDING UTILITY SERVICES SUCH AS ELECTRICITY, GAS OR WATER. 'PERMANENTLY ATTACHED' SHALL INCLUDE ALL ELECTRICAL CONNECTIONS EXCEPT PLUGS FOR 110/220 VOLT RECEPTACLES HAVING A FLEXIBLE CABLE.
3. TEMPORARY, MOVABLE OR MOBILE EQUIPMENT WHICH IS HEAVIER THAN 400 POUNDS OR HAS A CENTER OF MASS LOCATED 4 FEET OR MORE ABOVE THE ADJACENT FLOOR OR ROOF LEVEL THAT DIRECTLY SUPPORT THE COMPONENT IS REQUIRED TO BE RESTRAINED IN A MANNER APPROVED BY DSA.

THE FOLLOWING MECHANICAL AND ELECTRICAL COMPONENTS SHALL BE POSITIVELY ATTACHED TO THE STRUCTURE BUT NEED NOT DEMONSTRATE DESIGN COMPLIANCE WITH THE REFERENCES NOTED ABOVE. THESE COMPONENTS SHALL HAVE FLEXIBLE CONNECTIONS PROVIDED BETWEEN THE COMPONENT AND ASSOCIATED DUCTWORK, PIPING AND CONDUIT. FLEXIBLE CONNECTIONS MUST ALLOW MOVEMENT IN BOTH TRANSVERSE AND LONGITUDINAL DIRECTIONS:

A. COMPONENTS WEIGHING LESS THAN 400 POUNDS AND HAVE A CENTER OF MASS LOCATED 4 FEET OR LESS ABOVE THE ADJACENT FLOOR OR ROOF LEVEL THAT DIRECTLY SUPPORT THE COMPONENT.
B. COMPONENTS WEIGHING LESS THAN 20 POUNDS, OR IN THE CASE OF DISTRIBUTED SYSTEMS, LESS THAN 5 POUNDS PER FOOT, WHICH ARE SUSPENDED FROM A ROOF OR FLOOR OR HUNG FROM A WALL.

THE ANCHORAGE OF ALL MECHANICAL, ELECTRICAL AND PLUMBING COMPONENTS SHALL BE SUBJECT TO THE APPROVAL OF THE DESIGN PROFESSIONAL IN GENERAL RESPONSIBLE CHARGE OR STRUCTURAL ENGINEER DELEGATED RESPONSIBILITY AND ACCEPTANCE BY DSA. THE PROJECT INSPECTOR WILL VERIFY THAT ALL COMPONENTS AND EQUIPMENT HAVE BEEN ANCHORED IN ACCORDANCE WITH THE ABOVE REQUIREMENTS.

PIPING, DUCTWORK, AND ELECTRICAL DISTRIBUTION SYSTEM BRACING NOTE

PIPING, DUCTWORK, AND ELECTRICAL DISTRIBUTION SYSTEMS SHALL BE BRACED TO COMPLY WITH THE FORCES AND DISPLACEMENTS PRESCRIBED IN ASCE 7 SECTION 13.3 AS DEFINED IN ASCE 7 SECTIONS 13.6.5, 13.6.6, 13.6.7 AND 13.6.8, AND 2022 CBC, SECTIONS 1617A.1.24, 1617A.1.25, AND 1617A.1.26.

THE METHOD OF SHOWING BRACING AND ATTACHMENTS TO THE STRUCTURE FOR THE IDENTIFIED DISTRIBUTION SYSTEM ARE AS NOTED BELOW. THE MEP DESIGN PROFESSIONAL ENGINEER RESPONSIBLE FOR CONTENT ON THESE SHEETS HAS VERIFIED THAT THE DESIGN METHODS IDENTIFIED BELOW ARE IN ACCORDANCE WITH DSA IR 16-13.

MECHANICAL PIPING (MP), MECHANICAL DUCTS (MD), PLUMBING PIPING (PP), ELECTRICAL DISTRIBUTION SYSTEMS (E).

MP ☐ MD ☐ PP ☐ E ☑ - OPTION 1: PROJECT-SPECIFIC DESIGN.

MP ☐ MD ☐ PP ☐ E ☐ - OPTION 2: DESIGN BASED ON OSHPD OPM, WITHIN PROJECT SUBMITTAL

MP ☐ MD ☐ PP ☐ E ☐ - OPTION 3: DESIGN BASED ON OSHPD OPM, DEFERRED SUBMITTAL

AUTOMATIC FIRE SPRINKLER SYSTEM

ALL BUILDINGS HAVE AN AUTOMATIC FIRE SPRINKLER SYSTEM. HEAT DETECTORS HAVE BEEN OMITTED, IN CONCEALED ATTIC SPACES ABOVE CEILINGS AND SOFFITS, DUE TO THE AUTOMATIC FIRE SPRINKLER SYSTEM IS FULLY EQUIPPED IN THESE AREAS. C.F.C. 907.2.3.6.2.

COMPLETE AUTOMATIC FIRE ALARM SYSTEM PLAN SUBMITTAL

THE FIRE ALARM SYSTEM SHOWN ON THESE PLANS HAS BEEN SUBMITTED AND APPROVED BY THE DIVISION OF THE STATE ARCHITECT. ANY SUBSTITUTION OF THE FIRE ALARM SYSTEM SHALL BE RESUBMITTED TO THE ARCHITECT FOR REVIEW AND APPROVAL. THE CONTRACTOR SHALL PAY ANY ADDITIONAL FEES THAT ARE INCURRED DUE TO THIS SUBSTITUTION.

THE FIRE ALARM SYSTEM SHALL BE A TOTAL (COMPLETE) AUTOMATIC HEAT AND SMOKE DETECTION SYSTEM, PER C.F.C. SECTION 907.2.3.6, AND SHALL COVER EVERY ROOM AND/OR AREA. UPON THE ACTIVATION OF ANY INITIATION DEVICE THE FIRE ALARM SYSTEM SHALL ALERT ALL OCCUPANTS AND TRANSMIT THE ALARM, SUPERVISORY, AND TROUBLE SIGNALS TO AN APPROVED SUPERVISING STATION (C.F.C. SECTION 907.2.3.5).

Rose Sing Eastham & Associates
Electrical Consultants
131 S. Dunworth – (559)733-2671
Visalia, California 93292-6705

REGISTERED PROFESSIONAL ENGINEER KIRK A. EASTHAM No. E-18786 Exp. 6/30/27 ELECTRICAL STATE OF CALIFORNIA

IDENTIFICATION STAMP
DIV. OF THE STATE ARCHITECT
APP: 02-123307 INC:
REVIEWED FOR
SS ☑ FLS ☑ ACS ☑
DATE: 10/15/2025

Owner:

WASHINGTON UNIFIED SCHOOL DISTRICT

WASHINGTON UNIFIED SCHOOL DISTRICT
6041 SOUTH ELM AVE.
FRESNO, CA 93706

Project Name:

STUDENT SERVICES

Project Address:

WASHINGTON UNION HIGH SCHOOL
6041 SOUTH ELM AVE,
Fresno, CA 93706

integrated designs
by SOMAM, Inc.

ARCHITECTURE
ENGINEERING
INTERIOR DESIGN

6011 N. FRESNO STREET, SUITE 130
FRESNO CALIFORNIA 93710
P:(559) 436-0881 F:(559) 436-0887
E: design@somam.com
integrateddesigns.com

Ownership of Documents
This document, the ideas and designs incorporated herein, as an instrument of Professional Service is the property of Integrated Designs by SOMAM Inc. and is not to be used, in whole or in part for any other project without written authorization.
© COPYRIGHT 2020

Stamp:

Sheet Title:

CODES, NOTES SYMBOLS AND FIXTURE SCHED.

Job No.: **5613**

Sheet No.: **E0.01**

Release: DSA Issue Date: 04-23-25

Z:\Drafting\Jobs\RSES\5XXX\5613 Washington High School\2613 Washington Union HS - Student Services Bldg\E0.01.dwg XREF: SM13: 09/19/25 Bh: Phoebe DATE PLOTTED: 09/19/25 JOB # 25-108-SE

STATE OF CALIFORNIA
Indoor Lighting
CALIFORNIA ENERGY COMMISSION

CERTIFICATE OF COMPLIANCE		NRCC-LTI-E
Project Name:	WASHINGTON UNION HIGH SCHOOL - STUDENT SERVICES	Report Page: (Page 1 of 8)
Project Address:	6041 SOUTH ELM AVE,_FRESNO CA 93706	Date Prepared: 2025-08-05T10:42:20-04:00

A. GENERAL INFORMATION

01	Project Location (city)	FRESNO	04 Total Conditioned Floor Area (ft²)	8,813
02	Climate Zone	13	05 Total Unconditioned Floor Area (ft²)	0
03	Occupancy Types Within Project (select all that apply):		06 # of Stories (Habitable Above Grade)	1

● Office ● School or Classroom

B. PROJECT SCOPE

This table includes any lighting systems that are within the scope of the permit application and are demonstrating compliance using the prescriptive path outlined in 140.6 / 170.2(e) or 141.0(b)2 / 180.2(b)4 for alterations.

Scope of Work	Conditioned Spaces		Unconditioned Spaces	
01	02	03	04	05
My Project Consists of (check all that apply):	Calculation Method	Area (ft²)	Calculation Method	Area (ft²)
☒ New Lighting System	Complete Building Method	8813	N/A	0
☐ New Lighting System - Parking Garage	N/A	0	N/A	0
Total Area of Work (ft²)	8813			

STATE OF CALIFORNIA
Indoor Lighting
CALIFORNIA ENERGY COMMISSION

CERTIFICATE OF COMPLIANCE		NRCC-LTI-E
Project Name:	WASHINGTON UNION HIGH SCHOOL - STUDENT SERVICES	Report Page: (Page 4 of 8)
	6041 SOUTH ELM AVE,_FRESNO CA 93706	Date Prepared: 2025-08-05T10:42:20-04:00

F. INDOOR LIGHTING FIXTURE SCHEDULE

N2	LED SURFACE	No	NA	7	Mfr. Spec	1	No	7	☐	☐
							Total Designed Watts: CONDITIONED SPACES	5,286		

[1]*FOOTNOTE: Design Watts for small aperture and color changing luminaires which qualify per 140.6(a)4B /170.2(e)2D is adjusted to be 75% /80% of their rated wattage. Table F automatically makes this adjustment, the permit applicant should enter full rated wattage in column 05.*

[2]*Authority Having Jurisdiction may ask for Luminaire cut sheets to confirm wattage used for compliance per 130.0(c) /160.5(b). Wattage used must be the maximum rated for the luminaire, not the lamp.*

G. MODULAR LIGHTING SYSTEMS

This section does not apply to this project.

H. INDOOR LIGHTING CONTROLS (Not including PAFs)

This table includes lighting controls for conditioned and unconditioned spaces.

Building Level Controls

01	02	03	
		Field Inspector	
		Pass	Fail
Mandatory Demand Response 110.12(c)	Shut-off controls 130.1(c) / 160.5(b)4C		
Required >= 4,000W subject to multilevel	See Area/Space Level Controls	☐	☐

Area Level Controls

04	05	06	07	08	09	10	11	12	
								Field Inspector	
Area Description	Complete Building or Area Category Primary Function Area	Manual Area Controls 130.1(a) /160.5(b)4A	Multi-Level Controls 130.1(b) /160.5(b)4B	Shut-Off Controls 130.1(c) //160.5(b)4C	Primary/Sky lit Daylighting 130.1(d) /160.5(b)4D	Secondary Daylighting 130.1(d) /160.5(b)4D	Interlocked Systems 140.6(a)1/170.2(e)2A	Pass	Fail
STUDENT SERVICES	Office	Readily Accessible	Dimmer	Occupancy Sensor	Included	Included	No	☐	☐

STATE OF CALIFORNIA
Indoor Lighting
CALIFORNIA ENERGY COMMISSION

CERTIFICATE OF COMPLIANCE		NRCC-LTI-E
Project Name:	WASHINGTON UNION HIGH SCHOOL - STUDENT SERVICES	Report Page: (Page 7 of 8)
	6041 SOUTH ELM AVE,_FRESNO CA 93706	Date Prepared: 2025-08-05T10:42:20-04:00

U. DECLARATION OF REQUIRED CERTIFICATES OF INSTALLATION

Selections have been made based on information provided in this document. If any selections have been changed by permit applicant, an explanation should be included in Table E. Additional Remarks. These documents must be provided to the building inspector during construction and can be found online

Form/Title
NRCI-LTI-E - Must be submitted for all buildings

V. DECLARATION OF REQUIRED CERTIFICATES OF ACCEPTANCE

Selections have been made based on information provided in this document. If any selections have been changed by the permit applicant, an explanation should be included in Table E. Additional Remarks. These documents must be provided to the building inspector during construction and any with "-A" in the form name must be completed through an Acceptance Test Technician Certification Provider (ATTCP). For more information visit: http://www.energy.ca.gov/title24/atttcp/providers.html

Form/Title	Systems/Spaces To Be Field Verified
NRCA-LTI-02-A - Must be submitted for occupancy sensors and automatic time switch controls.	STUDENT SERVICES
NRCA-LTI-03-A - Must be submitted for automatic daylight controls.	STUDENT SERVICES
NRCA-LTI-04-A - Must be submitted for demand responsive lighting controls.	STUDENT SERVICES

STATE OF CALIFORNIA
Indoor Lighting
CALIFORNIA ENERGY COMMISSION

CERTIFICATE OF COMPLIANCE		NRCC-LTI-E
Project Name:	WASHINGTON UNION HIGH SCHOOL - STUDENT SERVICES	Report Page: (Page 2 of 8)
	6041 SOUTH ELM AVE,_FRESNO CA 93706	Date Prepared: 2025-08-05T10:42:20-04:00

C. COMPLIANCE RESULTS

If any cell on this table says "DOES NOT COMPLY" or "COMPLIES with Exceptional Conditions" refer to Table D. for guidance.

Lighting in conditioned and unconditioned spaces must not be combined for compliance per 140.6(b)1 /170.2(e)	Allowed Lighting Power per 140.6(b) /170.2(e) (Watts)						Adjusted Lighting Power per 140.6(a) /170.2(e) (Watts)				Compliance Results
	01	02	03	04	05		06	07	08		09
	Complete Building 140.6(c)1	Area Category 140.6(c)2 /170.2(e)4	Area Category Additional 140.6(c)2c / 170.2(e)4Av (+)	Tailored 140.6(c)3 /170.2(e)4B (+)	**Total Allowed** (Watts)		Total Designed (Watts)	Adjustments PAF Lighting Control Credits 140.6(a)2 /170.2(e)1B (-)	**Total Adjusted** (Watts) *Includes Adjustments		**05 must be >= 08 140.6 /170.2(e)**
	(See Table I)	(See Table I)	(See Table J)	(See Table K)			(See Table F)	(See Table P)			
Conditioned	5,287.8				= 5,287.8	≥	5,286		= 5286		COMPLIES
Unconditioned					=	≥			=		
Controls Compliance (See Table H for Details)											COMPLIES
Rated Power Reduction Compliance (See Table Q for Details)											

D. EXCEPTIONAL CONDITIONS

This table is auto-filled with uneditable comments because of selections made or data entered in tables throughout the form.

E. ADDITIONAL REMARKS

This table includes remarks made by the permit applicant to the Authority Having Jurisdiction.

STATE OF CALIFORNIA
Indoor Lighting
CALIFORNIA ENERGY COMMISSION

CERTIFICATE OF COMPLIANCE		NRCC-LTI-E
Project Name:	WASHINGTON UNION HIGH SCHOOL - STUDENT SERVICES	Report Page: (Page 5 of 8)
	6041 SOUTH ELM AVE,_FRESNO CA 93706	Date Prepared: 2025-08-05T10:42:20-04:00

H. INDOOR LIGHTING CONTROLS (Not including PAFs)

	13
	Plan Sheet Showing Daylit Zones:
	E3.10

I. LIGHTING POWER ALLOWANCE: COMPLETE BUILDING OR AREA CATEGORY METHODS

Each area complying using the Complete Building or Area Category Methods per 140.6(b) are included in this table. Column 06 indicates if additional lighting power allowances per 140.6(c) or adjustments per 140.6(a) are being used .

Conditioned Spaces

01	02	03	04	05	06	
					Additional Allowance / Adjustment	
Area Description	Complete Building or Area Category Primary Function Area	Allowed Density (W/ft²)	Area (ft²)	Allowed Wattage (Watts)	Area Category	PAF
STUDENT SERVICES	Office	0.6	8,813	5,287.8	No	No
		TOTALS:	8,813	5,287.8	See Tables J, or P for detail	

J. ADDITIONAL ALLOWANCE: AREA CATEGORY METHOD QUALIFYING LIGHTING SYSTEM

This section does not apply to this project.

K. TAILORED METHOD GENERAL LIGHTING POWER ALLOWANCE

This section does not apply to this project.

L. ADDITIONAL LIGHTING ALLOWANCE: TAILORED WALL DISPLAY

This section does not apply to this project.

M. ADDITIONAL LIGHTING ALLOWANCE: TAILORED FLOOR AND TASK LIGHTING

This section does not apply to this project.

STATE OF CALIFORNIA
Indoor Lighting
CALIFORNIA ENERGY COMMISSION

CERTIFICATE OF COMPLIANCE		NRCC-LTI-E
Project Name:	WASHINGTON UNION HIGH SCHOOL - STUDENT SERVICES	Report Page: (Page 8 of 8)
Project Address:	6041 SOUTH ELM AVE,_FRESNO CA 93706	Date Prepared: 2025-08-05T10:42:20-04:00

DOCUMENTATION AUTHOR'S DECLARATION STATEMENT

I certify that this Certificate of Compliance documentation is accurate and complete.

Documentation Author Name: Steve Eastham	Documentation Author Signature:
Company: Rose Sing Eastham	Signature Date: 08-05-25
Address: 131 S. DUNWORTH ST	CEA/ HERS Certification Identification (if applicable):
City/State/Zip: VISALIA, CA 93292-6705	Phone: (559) 733 - 2671 EXT. 101

RESPONSIBLE PERSON'S DECLARATION STATEMENT

I certify the following under penalty of perjury, under the laws of the State of California:

1. The information provided on this Certificate of Compliance is true and correct.
2. I am eligible under Division 3 of the Business and Professions Code to accept responsibility for the building design or system design identified on this Certificate of Compliance (responsible designer)
3. The energy features and performance specifications, materials, components, and manufactured devices for the building design or system design identified on this Certificate of Compliance conform to the requirements of Title 24, Part 1 and Part 6 of the California Code of Regulations.
4. The building design features or system design features identified on this Certificate of Compliance are consistent with the information provided on other applicable compliance documents, worksheets, calculations, plans and specifications submitted to the enforcement agency for approval with this building permit application.
5. I will ensure that a completed signed copy of this Certificate of Compliance shall be made available with the building permit(s) issued for the building, and made available to the enforcement agency for all applicable inspections. I understand that a completed signed copy of this Certificate of Compliance is required to be included with the documentation the builder provides to the building owner at occupancy.

Responsible Designer Name: Steve Eastham	Responsible Designer Signature:
Company: Rose Sing Eastham	Date Signed: 08-05-25
Address: 131 S. DUNWORTH ST	License: E18786
City/State/Zip: VISALIA, CA 93292-6705	Phone: (559) 733 - 2671 EXT. 101

STATE OF CALIFORNIA
Indoor Lighting
CALIFORNIA ENERGY COMMISSION

CERTIFICATE OF COMPLIANCE		NRCC-LTI-E
Project Name:	WASHINGTON UNION HIGH SCHOOL - STUDENT SERVICES	Report Page: (Page 3 of 8)
	6041 SOUTH ELM AVE,_FRESNO CA 93706	Date Prepared: 2025-08-05T10:42:20-04:00

F. INDOOR LIGHTING FIXTURE SCHEDULE

This table includes all planned permanent and portable lighting other than dwelling unit/ hotel/ motel room lighting. Multifamily dwelling unit and hotel/motel room lighting is documented in Table T. If using Table T to document lighting in multifamily common use areas providing shared provisions for living, eating, cooking or sanitation, those luminaires are not included here.

Designed Wattage: Conditioned Spaces

01	02	03	04	05	06	07	08	09	10	
									Field Inspector	
Name or Item Tag	Complete Luminaire Description	Modular (Track) Fixture	Small Aperture & Color Change [1]	Watts per luminaire[2]	How is Wattage determined	Total Number of Luminaires	Excluded per 140.6(a)3 / 170.2(e)2C	Design Watts	Pass	Fail
A, AE	RECESSED LED LUMINAIRE	No	NA	50	Mfr. Spec	15	No	750	☐	☐
B, BE	RECESSED LED LUMINAIRE	No	NA	38	Mfr. Spec	36	No	1,368	☐	☐
C, CE	RECESSED LED LUMINAIRE	No	NA	45	Mfr. Spec	29	No	1,305	☐	☐
D, DE	6" LED DOWNLIGHT	No	NA	15	Mfr. Spec	8	No	120	☐	☐
F, FE	6" LED DOWNLIGHT	No	NA	20	Mfr. Spec	14	No	280	☐	☐
G, GE	SURFACE LED VOLUMETRIC	No	NA	35	Mfr. Spec	9	No	315	☐	☐
H, HE	SURFACE LED VOLUMETRIC	No	NA	45	Mfr. Spec	3	No	135	☐	☐
J	SUSPENDED LINEAR LUMINARE	No	NA	53	Mfr. Spec	4	No	212	☐	☐
K7	COVE LIGHTING	No	NA	11	Mfr. Spec	16	No	176	☐	☐
K10	COVE LIGHTING	No	NA	15	Mfr. Spec	2	No	30	☐	☐
K16	COVE LIGHTING	No	NA	24	Mfr. Spec	2	No	48	☐	☐
K18	COVE LIGHTING	No	NA	27	Mfr. Spec	2	No	54	☐	☐
K24	COVE LIGHTING	No	NA	36	Mfr. Spec	2	No	72	☐	☐
L	PENDANT	No	NA	45	Mfr. Spec	4	No	180	☐	☐
M14	12" RECESSED WALL	No	NA	9	Mfr. Spec	9	No	81	☐	☐
M18	18" RECESSED WALL	No	NA	13	Mfr. Spec	4	No	52	☐	☐
M24	24" RECESSED WALL	No	NA	17	Mfr. Spec	3	No	51	☐	☐
X	EXIT	No	NA	2	Mfr. Spec	18	No	36	☐	☐
N1	6" LED DOWNLIGHT	No	NA	7	Mfr. Spec	2	No	14	☐	☐

STATE OF CALIFORNIA
Indoor Lighting
CALIFORNIA ENERGY COMMISSION

CERTIFICATE OF COMPLIANCE		NRCC-LTI-E
Project Name:	WASHINGTON UNION HIGH SCHOOL - STUDENT SERVICES	Report Page: (Page 6 of 8)
	6041 SOUTH ELM AVE,_FRESNO CA 93706	Date Prepared: 2025-08-05T10:42:20-04:00

N. ADDITIONAL LIGHTING ALLOWANCE: TAILORED DECORATIVE /SPECIAL EFFECTS

This section does not apply to this project.

O. ADDITIONAL LIGHTING ALLOWANCE: TAILORED VERY VALUABLE MERCHANDISE

This section does not apply to this project.

P. POWER ADJUSTMENT: LIGHTING CONTROL CREDIT (POWER ADJUSTMENT FACTOR (PAF))

This section does not apply to this project.

Q. RATED POWER REDUCTION COMPLIANCE FOR ONE-FOR-ONE ALTERATIONS

This section does not apply to this project.

R. 80% LIGHTING POWER FOR ALL ALTERATIONS - CONTROLS EXCEPTIONS

This section does not apply to this project.

S. DAYLIGHT DESIGN POWER ADJUSTMENT FACTOR (PAF)

This section does not apply to this project.

T. DWELLING UNIT LIGHTING

This section does not apply to this project.

IDENTIFICATION STAMP
DIV. OF THE STATE ARCHITECT
APP: 02-123307 INC:
REVIEWED FOR
SS ☑ FLS ☑ ACS ☑
DATE: 10/15/2025

Owner:
WASHINGTON UNIFIED SCHOOL DISTRICT

WASHINGTON UNIFIED SCHOOL DISTRICT
6041 SOUTH ELM AVE.
FRESNO, CA 93706

Project Name:
STUDENT SERVICES

Project Address:
WASHINGTON UNION HIGH SCHOOL
6041 SOUTH ELM AVE,
Fresno, CA 93706

integrated designs
by SOMAM, Inc.

ARCHITECTURE
ENGINEERING
INTERIOR DESIGN

6011 N. FRESNO STREET, SUITE 130
FRESNO CALIFORNIA 93710
P:(559) 436-0881 F:(559) 436-0887
E: design@somam.com
integrateddesigns.com

Ownership of Documents
This document, the ideas and designs incorporated herein, as an instrument of Professional Service is the property of Integrated Designs by SOMAM Inc. and is not to be used, in whole or in part for any other project without written authorization.
© COPYRIGHT 2020

Stamp:

Sheet Title:
INDOOR LIGHTING COMPLIANCE

Job No.: **5613**

Sheet No.: **E0.02**

Release: DSA Issue Date: 04-23-25

Rose Sing Eastham & Associates
Electrical Consultants
131 S. Dunworth – (559)733-2671
Visalia, California 93292-6705

REGISTERED PROFESSIONAL ENGINEER
DEREK KIRK HOLLIS
No. E-18786
Exp. 6/30/27
ELECTRICAL
STATE OF CALIFORNIA

Z:\Drafting\Jobs\PDFCSCKTDS\Projects\Washington High School\5613 Washington Union HS - Student Services Bldg\01\02.dwg [DATE: 5/4/23, 08/05/25] Str: Name: DATE: PLOTTED: 08/19/25 JOB # 25-08-5E
1/4" = 1'-0" 1/8" = 1'-0" 1" = 20'-0" 1" = 30'-0" 1" = 40'-0" 1" = 50'-0"

STATE OF CALIFORNIA
Outdoor Lighting
CALIFORNIA ENERGY COMMISSION

CERTIFICATE OF COMPLIANCE	NRCC-LTO-E
This document is used to demonstrate compliance with requirements in 110.9, 130.0, 130.2, 140.7, and 141.0(b)2L for outdoor lighting scopes using the prescriptive path for nonresidential and hotel/motel occupancies. It is also used to document compliance with requirements in 160.5, 170.2(e)6, 180.1(a) and 180.2(b)4Bv for outdoor lighting scopes using the prescriptive path for multifamily and mixed-use occupancies. Multifamily includes dormitory and senior living facilities.	
Project Name: WASHINGTON UNION HIGH SCHOOL - STUDENT SERVICES	**Report Page:** (Page 1 of 7)
Project Address: 6041 SOUTH ELM AVE., FRESNO CA 93706	**Date Prepared:** 2025-08-07T14:37:13-04:00

A. GENERAL INFORMATION

01	Project Location (city)	FRESNO	04	Total Illuminated Hardscape Area (ft²)	10800
02	Climate Zone	13			
03	Outdoor Lighting Zone per Title 24 Part 1 10.114 or as designated by Authority Having Jurisdiction (AHJ):				
☐	LZ-0: Very Low - Undeveloped Parkland	☒ LZ-2: Moderate - Urban Clusters	☐ LZ-4: High - Must be reviewed by CA Energy Commission for Approval		
☐	LZ-1: Low - Rural Areas	☐ LZ-3: Moderately High - Urban Areas			
05	Occupancy Types within Project				
● School or Classroom					

B. PROJECT SCOPE

This table includes outdoor lighting systems that are within the scope of the permit application and are demonstrating compliance using the prescriptive path outlined in 140.7 / 170.2(e)6 or 141.0(b)2L / 180.2(b)4Bv for alterations.

My Project Consists of:

01	02		
☒ New Lighting System	Must Comply with Allowances from 140.7 / 170.2(e)6		
☐ Altered Lighting System	Is your alteration increasing the connected lighting load (Watts)?	○ Yes	○ No
03	04	05	
% of Existing Luminaires Being Altered[1]	Sum Total of Luminaires Being Added or Altered	Calculation Method	
☐ < 10% ☐ >= 10% and < 50% ☐ >= 50%			

Please proceed to Table F. Outdoor Lighting Fixture Schedule to define the project's luminaires.

[1] *FOOTNOTES: % of Existing Luminaires Being Altered = (Sum Total of Luminaires Being Added or Altered / Existing Luminaires within the Scope of the Permit Application) x 100.*

STATE OF CALIFORNIA
Outdoor Lighting
CALIFORNIA ENERGY COMMISSION

CERTIFICATE OF COMPLIANCE	NRCC-LTO-E
Project Name: WASHINGTON UNION HIGH SCHOOL - STUDENT SERVICES	**Report Page:** (Page 2 of 7)
6041 SOUTH ELM AVE., FRESNO CA 93706	**Date Prepared:** 2025-08-07T14:37:13-04:00

C. COMPLIANCE RESULTS

Results in this table are automatically calculated from data input and calculations in Tables F through N. Note: If any cell on this table says "COMPLIES with Exceptional Conditions" refer to Table D. Exceptional Conditions for guidance or see applicable Table referenced below.

Calculations of Total Allowed Lighting Power (Watts) 140.7 / 170.2(e)6 or 141.0(b)2L / 180.2(b)4Bv												Compliance Results		
01		02		03		04		05		06		07		08	09
General Hardscape Allowance 140.7(d)1 / 170.2(e)6 (See Table I)	+	Per Application 140.7(d)2 / 170.2(e)6 (See Table J)	+	Sales Frontage 140.7(d)2 (See Table K)	+	Ornamental 140.7(d)2 / 170.2(e)6 (See Table L)	+	Per Specific Area 140.7(d)2 / 170.2(e)6 (See Table M)	OR	Existing Power Allowance 141.0(b)2L / 180.2(b)4Bv (See Table N)	=	**Total Allowed** (Watts)	≥	**Total Actual** (Watts)	**07 must be >= 08**
486.35	+	---	+	---	+	---	+	---	OR	---	=	486.35	≥	485	COMPLIES
Shielding Compliance (See Table G for Details)															N/A
Controls Compliance (See Table H for Details)															COMPLIES

D. EXCEPTIONAL CONDITIONS

This table is auto-filled with uneditable comments because of selections made or data entered in tables throughout the form.

E. ADDITIONAL REMARKS

This table includes remarks made by the permit applicant to the Authority Having Jurisdiction.

CA Building Energy Efficiency Standards - 2022 Nonresidential Compliance
Generated Date/Time:
Report Version: 2022.0.000
Schema Version: rev 20220101
Documentation Software: Energy Code Ace
Compliance ID: 276385-0825-0014
Report Generated: 2025-08-07 11:37:16

STATE OF CALIFORNIA
Outdoor Lighting
CALIFORNIA ENERGY COMMISSION

CERTIFICATE OF COMPLIANCE	NRCC-LTO-E
Project Name: WASHINGTON UNION HIGH SCHOOL - STUDENT SERVICES	**Report Page:** (Page 3 of 7)
6041 SOUTH ELM AVE., FRESNO CA 93706	**Date Prepared:** 2025-08-07T14:37:13-04:00

F. OUTDOOR LIGHTING FIXTURE SCHEDULE

For new or altered lighting systems demonstrating compliance with 140.7 / 170.2(e)6 all new luminaires being installed and any existing luminaires remaining or being moved within the spaces covered by the permit application are included in the Table below. For altered lighting systems using the Existing Power method per 141.0(b)2L only new luminaires being installed and replacement luminaires being installed as part of the project scope are included (ie, existing luminaires remaining or existing luminaires being moved are not included). Outdoor lighting attached to multifamily buildings and controlled from the inside of a dwelling unit are included in Table H. and are not included here. All other multifamily outdoor lighting is included here.

Designed Wattage:

01	02		03	04	05	06	07	08	09	10	
Name or Item Tag	Complete Luminaire Description		Watts per luminaire[1, 2]	How is Wattage determined	Total Number Luminaires [2]	Luminaire Status[3]	Excluded per 140.7(a) / 170.2(e)6A	Design Watts	Cutoff Req. > 6,200 initial lumen output 130.2(b) /160.5(c)1 [4]	Field Inspector	
										Pass	Fail
P	RECESSED	☐ Linear	15	Mfr. Spec	3	New	☐	45	NA: < 6200 lumens	☐	☐
Q,QE	RECESSED	☐ Linear	10	Mfr. Spec	34	New	☐	340	NA: < 6200 lumens	☐	☐
WL	LED WALL SCONE	☐ Linear	25	Mfr. Spec	4	New	☐	100	NA: < 6200 lumens	☐	☐
							Total Design Watts:	485			

* NOTES: Selections with a * require a note in the space below explaining how compliance is achieved.
EX: Luminaire is lighting a statue; EXCEPTION 2 to 130.2(b)

[1] *FOOTNOTES: Authority Having Jurisdiction may ask for Luminaire cut sheets to confirm wattage used for compliance per 130.0(c) / 160.5(b)*
[2] *For linear luminaires, wattage should be indicated as W/lf instead of Watts/luminaire. Total linear feet should be indicated in column 05 instead of number of luminaires.*
[3] *Select "New" for new luminaires in a new outdoor lighting project, or for added luminaires in an alteration. Select "Altered" for replacement luminaires in an alteration. Select "Existing to Remain" for existing luminaires within the project scope that are not being altered and are remaining. Select "Existing Reinstalled" for existing luminaires which are being removed and reinstalled as part of the project scope.*
[4] *Compliance with mandatory shielding requirements is required for luminaires with initial lumen output >= 6,200 unless exempted by 130.2(b)/ 160.5(c)*

G. SHIELDING REQUIREMENTS (BUG)

This section does not apply to this project.

CA Building Energy Efficiency Standards - 2022 Nonresidential Compliance
Generated Date/Time:
Report Version: 2022.0.000
Schema Version: rev 20220101
Documentation Software: Energy Code Ace
Compliance ID: 276385-0825-0014
Report Generated: 2025-08-07 11:37:16

STATE OF CALIFORNIA
Outdoor Lighting
CALIFORNIA ENERGY COMMISSION

CERTIFICATE OF COMPLIANCE	NRCC-LTO-E
Project Name: WASHINGTON UNION HIGH SCHOOL - STUDENT SERVICES	**Report Page:** (Page 4 of 7)
6041 SOUTH ELM AVE., FRESNO CA 93706	**Date Prepared:** 2025-08-07T14:37:13-04:00

H. OUTDOOR LIGHTING CONTROLS

This table demonstrates compliance with controls requirements for all new or altered luminaires installed as part of the permit application. For alteration projects, luminaires which are existing to remain (ie untouched) and luminaires which are removed and reinstalled (wiring only) do not need to be included in this table even if they are within the spaces covered by the permit application.
Outdoor lighting for nonresidential buildings, parking garages and common service areas in multifamily buildings must be documented separately from outdoor lighting attached to multifamily buildings and controlled from the inside of a dwelling unit

Mandatory Controls for Nonresidential Occupancies, Parking Garages & Common Areas in Multifamily Buildings

01	02	03	04	05	
Area Description	Shut-Off 130.2(c)1 / 160.5(c)	Auto-Schedule 130.2(c)2 / 160.5(c)	Motion Sensor 130.2(c)3 / 160.5(c)	Field Inspector	
				Pass	Fail
GENERAL HARDSCAPE: "P"	Astronomical Timer	Provided	NA: Each Luminaire <= 40 Watts	☐	☐
GENERAL HARDSCAPE: Q,QE"	Astronomical Timer	Provided	NA: Each Luminaire <= 40 Watts	☐	☐

[1] *FOOTNOTE: Text has been abbreviated, please refer to Table 160.5-A to confirm compliance with the specific light source technologies listed.*
[2] *Authority having jurisdiction may ask for cutsheets or other documentation to confirm compliance of light source.*
[3] *Recessed luminaires marked for use in fire-rated installations, and recessed luminaires installed in non-insulated ceilings are excepted from ii and iii.*

CA Building Energy Efficiency Standards - 2022 Nonresidential Compliance
Generated Date/Time:
Report Version: 2022.0.000
Schema Version: rev 20220101
Documentation Software: Energy Code Ace
Compliance ID: 276385-0825-0014
Report Generated: 2025-08-07 11:37:16

STATE OF CALIFORNIA
Outdoor Lighting
CALIFORNIA ENERGY COMMISSION

CERTIFICATE OF COMPLIANCE	NRCC-LTO-E
Project Name: WASHINGTON UNION HIGH SCHOOL - STUDENT SERVICES	**Report Page:** (Page 5 of 7)
6041 SOUTH ELM AVE., FRESNO CA 93706	**Date Prepared:** 2025-08-07T14:37:13-04:00

I. LIGHTING POWER ALLOWANCE (per 140.7 /170.2(e))

This table includes areas using allowance calculations per 140.7 /170.2(e). General Hardscape Allowance is per Table 140.7-A/Table 170.2-R while "Use it or lose it" Allowances are per Table 140.7-B /Table 170.2-S. Indicate which allowances are being used to expand sections for user input. Luminaires that qualify for one of the "Use it or lose it" allowances shall not qualify for another "Use it or lose it" allowance.
Outdoor lighting attached to multifamily buildings and controlled from the inside of a dwelling unit are included in Table H. and are not included here. All other multifamily outdoor lighting is included here.

	01				
	☒ General Hardscape Allowance Table I (below)	"Use it or lose it" Allowance (select all that apply) (select all that apply)			
		☐ Per Application Table J	☐ Sales Frontage Table K	☐ Ornamental Table L	☐ Per Specific Area Table M

Calculated General Hardscape Lighting Power Allowance per Table 140.7-A for Nonresidential & Hotel/Motel

02	03	04	05	06	07	08	09
Area Description	Area Wattage Allowance (AWA)			Linear Wattage Allowance (LWA)			Total General AWA + LWA (Watts)
	Illuminated Area (ft²)	Allowed Density (W/ft²)	Area Allowance (Watts)	Perimeter Length (lf)	Allowed Density (W/lf)	Linear Allowance (Watts)	
GENERAL HARDSCAPE	10800	0.019	205.2	541	0.15	81.15	286.35
				Initial Wattage Allowance for Entire Site [Watts]:			200
				Instances of Initial Wattage Allowance (LZ 0 only)[1]			
				Total General Hardscape Allowance [Watts]:			486.35

J. LIGHTING ALLOWANCE: PER APPLICATION

This section does not apply to this project.

K. LIGHTING ALLOWANCE: SALES FRONTAGE

This section does not apply to this project.

L. LIGHTING ALLOWANCE: ORNAMENTAL

This section does not apply to this project.

CA Building Energy Efficiency Standards - 2022 Nonresidential Compliance
Generated Date/Time:
Report Version: 2022.0.000
Schema Version: rev 20220101
Documentation Software: Energy Code Ace
Compliance ID: 276385-0825-0014
Report Generated: 2025-08-07 11:37:16

STATE OF CALIFORNIA
Outdoor Lighting
CALIFORNIA ENERGY COMMISSION

CERTIFICATE OF COMPLIANCE	NRCC-LTO-E
Project Name: WASHINGTON UNION HIGH SCHOOL - STUDENT SERVICES	**Report Page:** (Page 6 of 7)
6041 SOUTH ELM AVE., FRESNO CA 93706	**Date Prepared:** 2025-08-07T14:37:13-04:00

M. LIGHTING ALLOWANCE: PER SPECIFIC AREA

This section does not apply to this project.

N. EXISTING CONDITIONS POWER ALLOWANCE (alterations only)

This section does not apply to this project.

O. DECLARATION OF REQUIRED CERTIFICATES OF INSTALLATION

Selections have been made based on information provided in this document. If any selection has been changed by permit applicant, an explanation should be included in Table E. Additional Remarks. These documents must be provided to the building inspector during construction and can be found online

Form/Title
NRCI-LTO-E - Must be submitted for all buildings

P. DECLARATION OF REQUIRED CERTIFICATES OF ACCEPTANCE

Selections have been made based on information provided in this document. If any selection has been changed by permit applicant, an explanation should be included in Table E. Additional Remarks. These documents must be provided to the building inspector during construction and must be completed through an Acceptance Test Technician Certification Provider (ATTCP). For more information visit: http://www.energy.ca.gov/title24/attcp/providers.html

Form/Title	Systems/Spaces To Be Field Verified
NRCA-LTO-02-A - Must be submitted for all outdoor lighting controls except for alterations where controls are added to <= 20 luminaires.	GENERAL HARDSCAPE: "P"; GENERAL HARDSCAPE: "Q,QE"

CA Building Energy Efficiency Standards - 2022 Nonresidential Compliance
Generated Date/Time:
Report Version: 2022.0.000
Schema Version: rev 20220101
Documentation Software: Energy Code Ace
Compliance ID: 276385-0825-0014
Report Generated: 2025-08-07 11:37:16

STATE OF CALIFORNIA
Outdoor Lighting
CALIFORNIA ENERGY COMMISSION

CERTIFICATE OF COMPLIANCE	NRCC-LTO-E
Project Name: WASHINGTON UNION HIGH SCHOOL - STUDENT SERVICES	**Report Page:** (Page 7 of 7)
6041 SOUTH ELM AVE., FRESNO CA 93706	**Date Prepared:** 2025-08-07T14:37:13-04:00

DOCUMENTATION AUTHOR'S DECLARATION STATEMENT

I certify that this Certificate of Compliance documentation is accurate and complete.

Documentation Author Name: Steve Eastham	Documentation Author Signature:
Company: Rose Sing Eastham	Signature Date: 08-07-25
Address: 131 S. DUNWORTH ST	CEA/ HERS Certification Identification (if applicable):
City/State/Zip: VISALIA, CA 93292-6705	Phone: (559) 733 - 2671 EXT. 101

RESPONSIBLE PERSON'S DECLARATION STATEMENT

I certify the following under penalty of perjury, under the laws of the State of California:

1. The information provided on this Certificate of Compliance is true and correct.
2. I am eligible under Division 3 of the Business and Professions Code to accept responsibility for the building design or system design identified on this Certificate of Compliance (responsible designer)
3. The energy features and performance specifications, materials, components, and manufactured devices for the building design or system design identified on this Certificate of Compliance conform to the requirements of Title 24, Part 1 and Part 6 of the California Code of Regulations.
4. The building design features or system design features identified on this Certificate of Compliance are consistent with the information provided on other applicable compliance documents, worksheets, calculations, plans and specifications submitted to the enforcement agency for approval with this building permit application.
5. I will ensure that a completed signed copy of this Certificate of Compliance shall be made available with the building permit(s) issued for the building, and made available to the enforcement agency for all applicable inspections. I understand that a completed signed copy of this Certificate of Compliance is required to be included with the documentation the builder provides the building owner at occupancy.

Responsible Designer Name: Steve Eastham	Responsible Designer Signature:
Company: Rose Sing Eastham	Date Signed: 08-07-25
Address: 131 S. DUNWORTH ST	License: E18786
City/State/Zip: VISALIA, CA 93292-6705	Phone: (559) 733 - 2671 EXT. 101

CA Building Energy Efficiency Standards - 2022 Nonresidential Compliance
Generated Date/Time:
Report Version: 2022.0.000
Schema Version: rev 20220101
Documentation Software: Energy Code Ace
Compliance ID: 276385-0825-0014
Report Generated: 2025-08-07 11:37:16

IDENTIFICATION STAMP
DIV. OF THE STATE ARCHITECT
APP: 02-123307 INC:
REVIEWED FOR
SS ☑ FLS ☑ ACS ☑
DATE: 10/15/2025

Owner:
WASHINGTON UNIFIED SCHOOL DISTRICT

WASHINGTON UNIFIED SCHOOL DISTRICT
6041 SOUTH ELM AVE.
FRESNO, CA 93706

Project Name:
STUDENT SERVICES

Project Address:
WASHINGTON UNION HIGH SCHOOL
6041 SOUTH ELM AVE,
Fresno, CA 93706

integrated designs
by SOMAM, Inc.

ARCHITECTURE ENGINEERING INTERIOR DESIGN

6011 N. FRESNO STREET, SUITE 130
FRESNO CALIFORNIA 93710
P:(559) 436-0881 F:(559) 436-0887
E: design@somam.com
integrateddesigns.com

Ownership of Documents
This document, the ideas and designs incorporated herein, as an instrument of Professional Service is the property of Integrated Designs by SOMAM Inc. and is not to be used, in whole or in part for any other project without written authorization.
© COPYRIGHT 2020

Stamp:

Sheet Title:
OUTDOOR LIGHTING COMPLIANCE

Job No.: **5613**

Sheet No.: **E0.03**

Release: DSA
Issue Date: 04-23-25

Rose Sing Eastham & Associates
Electrical Consultants
131 S. Dunworth – (559)733–2671
Visalia, California 93292–6705

REGISTERED PROFESSIONAL ENGINEER
ROSE SING EASTHAM KIRK
No. E-18786
Exp. 6/30/27
ELECTRICAL
STATE OF CALIFORNIA

1" = 50'–0" 1" = 40'–0" 1" = 30'–0" 1" = 20'–0" 1/8" = 1'–0" 1/4" = 1'–0"
Z:\Drafting\Jobs\KCES\SCHOOLS\Fresno\Washington High School\5613 Washington Union HS - Student Services Bldg\DJ10.dwg DATE, SHEET: 08/07/25 BY: Kevin DATE PLOTTED: 08/19/25 JOB #: 25-108-SE

STATE OF CALIFORNIA
Electrical Power Distribution
CALIFORNIA ENERGY COMMISSION

CERTIFICATE OF COMPLIANCE — **NRCC-ELC-E**

This document is used to demonstrate compliance with mandatory requirements in 130.5, for electrical systems in newly constructed nonresidential and hotel/motel occupancies and 160.6 and 160.9 for electrical systems in newly constructed multifamily occupancies. Additions and alterations to electrical service systems in nonresidential and hotel/motel occupancies will also use this document to demonstrate compliance per 141.0(a) or 141.0(b)2P for alterations. For multifamily addition or alterations compliance will be documented per 180.1(a) or 180.2 (b)4bvii

Project Name:	WASHINGTON UNION HIGH SCHOOL - STUDENT SERVICES	**Report Page:**	**(Page 1 of 6)**
Project Address:	6041 SOUTH ELM AVE., FRENSO, CA 93706	**Date Prepared:**	2025-03-20T19:25:00-04:00

A. GENERAL INFORMATION

01	Project Location (city)	FRESNO	02	Climate Zone	13
			03	Occupancy Types Within Project:	School or Classroom

B. PROJECT SCOPE

This table includes electrical systems that are within the scope of the permit application.

01	02	03	04	05	06	07
Electrical Service Designat:on/ Description	Scope of Work[1]	Rating[2] (kVA)	Utility Provided Metering System Exception to 130.5(a)/ 160.6(a)[3]	System subject to CA Elec Code Article 517 Exception to 130.5(a)and (b)	Demand Response Controls	Provides power to dwelling units/common living areas only in multifamily occupancy
E1.12, E1.13	Complete replacement service equipment and meter	1330	☒	☐	Where required, demand response controls must be specified which are capable of receiving and automatically responding to at least one standards based messaging protocol which enables demand response after receiving a demand response signal. Sections 120.2/ 160.3, 130.1/ 160.5, and 130.3/ 160.5, and mechanical, indoor lighting, and sign lighting Certificate of Compliance documents will indicate when demand response controls are required.	☐

[1] *FOOTNOTES: Adding only new feeders and branch circuits triggers Voltage Drop 130.5(c)/160.6(c), no other requirements from 130.5/160.6 are required.*
[2] *If common use areas in a multifamily are submetered, rating is for submeter size serving common use areas.*
[3] *Applicable if the utility company is providing a metering system that indicates instantaneous KW demand and kWh for a utility-defined period.*

STATE OF CALIFORNIA
Electrical Power Distribution
CALIFORNIA ENERGY COMMISSION

CERTIFICATE OF COMPLIANCE — **NRCC-ELC-E**

Project Name:	WASHINGTON UNION HIGH SCHOOL - STUDENT SERVICES	**Report Page:**	**(Page 2 of 6)**
	6041 SOUTH ELM AVE., FRENSO, CA 93706	**Date Prepared:**	2025-03-20T19:25:00-04:00

C. COMPLIANCE RESULTS

Results in this table are automatically calculated from data input and calculations in Tables F through J. Note: If any cell on this table says "COMPLIES with Exceptional Conditions" refer to Table D. Exceptional Conditions for guidance or see applicable Table referenced below.

01		02		03		04	05	06
Service Electrical Metering 130.5(a)/ 160.6(a) (See Table F)	AND	Separation for Monitoring 130.5(b)/ 160.6(b) (See Table G)	AND	Voltage Drop 130.5(c)/ 160.6(c) (See Table H)	AND	Controlled Receptacles 130.5(d)/ 160.6(d) (See Table I)	Electric Ready 160.9 (See Table J)	**Compliance Results**
	AND	Yes	AND	Yes	AND	Yes		COMPLIES with Exceptional Conditions

D. EXCEPTIONAL CONDITIONS

This table is auto-filled with uneditable comments because of selections made or data entered in tables throughout the form.

Table B indicates the project is exempt from 130.5(a) Service Electrical Metering requirements because the utility company has provided the project a metering system that indicates instantaneous kW demand and kWh for a utility-defined period.

E. ADDITIONAL REMARKS

This table includes remarks made by the permit applicant to the Authority Having Jurisdiction.

STATE OF CALIFORNIA
Electrical Power Distribution
CALIFORNIA ENERGY COMMISSION

CERTIFICATE OF COMPLIANCE — **NRCC-ELC-E**

Project Name:	WASHINGTON UNION HIGH SCHOOL - STUDENT SERVICES	**Report Page:**	**(Page 3 of 6)**
	6041 SOUTH ELM AVE., FRENSO, CA 93706	**Date Prepared:**	2025-03-20T19:25:00-04:00

G. SEPARATION OF ELECTRICAL CIRCUITS FOR ENERGY MONITORING

This table includes entirely new or complete replacement electrical power distribution systems to demonstrate compliance with 130.5(b)/ 160.6(b). Any load types that are not included in the service do not need to be shown. For multifamily occupancies, submetered systems that provide power to dwelling units do not need to meet these separation requirements and therefore load types on those submetered systems also do not need to be shown.

01	02	03	04	05	
Load Type per Table 130.5-B[1]	Minimum Required Separation of Load per Table 130.5-B	Compliance Method[2]	Location of Requirements in Construction Documents	Field Inspector	
				Pass	Fail
E1.12, E1.13					
HVAC systems and components	All HVAC in aggregate and each HVAC load rated at least 50 kVA	Method 3: Branch circuits serve load types individually & provisions for adding future branch curcuit monitoring	E6.01, E6.02	☐	☐
Lighting including exit, egress and exterior	All lighting disaggregated by floor, type or area	Method 3: Branch circuits serve load types individually & provisions for adding future branch curcuit monitoring	E6.01, E6.02	☐	☐
Plug Loads and appliances less than 25kVA	All plug loads separated by floor, type or area Groups of plug loads exceeding 25 kVA connected load in an area less than 5000 sf	Method 3: Branch circuits serve load types individually & provisions for adding future branch curcuit monitoring	E6.01, E6.02	☐	☐
Renewable power sources (net or total)	Each group	Method 4: Complete metering system measures and reports loads by type	E2.21, E6.01, E6.02	☐	☐

STATE OF CALIFORNIA
Electrical Power Distribution
CALIFORNIA ENERGY COMMISSION

CERTIFICATE OF COMPLIANCE — **NRCC-ELC-E**

Project Name:	WASHINGTON UNION HIGH SCHOOL - STUDENT SERVICES	**Report Page:**	**(Page 4 of 6)**
	6041 SOUTH ELM AVE., FRENSO, CA 93706	**Date Prepared:**	2025-03-20T19:25:00-04:00

G. SEPARATION OF ELECTRICAL CIRCUITS FOR ENERGY MONITORING

This table includes entirely new or complete replacement electrical power distribution systems to demonstrate compliance with 130.5(b)/ 160.6(b). Any load types that are not included in the service do not need to be shown. For multifamily occupancies, submetered systems that provide power to dwelling units do not need to meet these separation requirements and therefore load types on those submetered systems also do not need to be shown.

01	02	03	04	05	
Load Type per Table 130.5-B[1]	Minimum Required Separation of Load per Table 130.5-B	Compliance Method[2]	Location of Requirements in Construction Documents	Field Inspector	
				Pass	Fail

* *NOTES: If "Other*" is selected under Compliance Method above, please indicate how compliance has been achieved in the space provided below.*

[1] *FOOTNOTES: For each separate load type, up to 10% of the connected load may be of any type.*
[2] *Method 1: Switchboards/ motor control centers/ panelboard loads disaggregated for each load type.*
Method 2: Switchboards/ motor control centers/ panelboard supply other distribution equipment with loads disaggregated for each load type.
Method 3: Branch circuits serve load types individually and provisions for adding future branch circuit monitoring.
Method 4: Complete metering system measures and reports loads by type.
See Chapter 8 of the Nonresidential Compliance Manual for more detail on Compliance Methods.

H. VOLTAGE DROP

This table includes entirely new or complete replacement electrical power distribution systems, or alterations that add, modify or replace both feeders and branch circuits to demonstrate compliance with 130.5(c)/ 160.6(c). For alterations, only the altered circuits must demonstrate compliance per 141.0(b)2Pii/ 180.2(b)4Bviic.

01	02			03	04	05	
Electrical Service Designation/Description	Combined Voltage Drop on Installed Feeder/Branch Circuit Conductors Compliance Method			Location of Voltage Drop Calculations[1]	Sheet Number for Voltage Drop Calculations in Construction Documents	Field Inspector	
						Pass	Fail
E1.12, E1.13	☒	Voltage drop less than 5%	☐ Permitted by CA Elec Code (Exception to 130.5(c))*	In construction documents	E6.01, E6.02	☐	☐

* *NOTES: If "Permitted by CA Elec Code *" is selected under Compliance Method above, please indicate where the exception applies in the space provided below.*

[1] *FOOTNOTES: Voltage drop calculations may be attached to the permit application outside the construction documents if allowed by the Authority Having Jurisdiction. Select "attached" if applicable. If calculations will be the responsibility of the installing contractor, select "Contractor Responsible".*

I. CIRCUIT CONTROLS FOR 120-VOLT RECEPTACLES AND CONTROLLED RECEPTACLES

This table includes entirely new or complete replacement electrical power distribution systems to demonstrate compliance with 130.5(d)/ 160.6(d).. Both controlled and uncontrolled receptacles must be provided in office areas, lobbies, conference rooms, kitchen areas in office spaces, copy rooms and hotel/motel guest rooms.

STATE OF CALIFORNIA
Electrical Power Distribution
CALIFORNIA ENERGY COMMISSION

CERTIFICATE OF COMPLIANCE — **NRCC-ELC-E**

Project Name:	WASHINGTON UNION HIGH SCHOOL - STUDENT SERVICES	**Report Page:**	**(Page 5 of 6)**
	6041 SOUTH ELM AVE., FRENSO, CA 93706	**Date Prepared:**	2025-03-20T19:25:00-04:00

I. CIRCUIT CONTROLS FOR 120-VOLT RECEPTACLES AND CONTROLLED RECEPTACLES

01	02	03	04	05	06	07	
Room name or Description	Location/ Type of Controlled Receptacles[1]	Shut-Off Controls	Demand Responsive Controls	Permanent Durable Marking Will be Used	Location of Requirements in Construction Documents	Field Inspector	
						Pass	Fail
LOBBY, RECEPTION, ADMIN	Within 6ft of uncontrolled receptacle	Occupancy Sensor	NA: Building does not require demand responsive lighting controls per 110.12(c)	☒	E2.10	☐	☐
OFFICE	Within 6ft of uncontrolled receptacle	Occupancy Sensor	NA: Building does not require demand responsive lighting controls per 110.12(c)	☒	E2.10	☐	☐
CONFERENCE	Within 6ft of uncontrolled receptacle	Occupancy Sensor	NA: Building does not require demand responsive lighting controls per 110.12(c)	☒	E2.10	☐	☐

* *NOTES: If "Other*" is selected under Shut-Off Controls above, please indicate how compliance has been achieved in the space provided below.*

[1] *FOOTNOTES: Receptacles dedicated to refrigerators and water dispensers in kitchens, located a minimum of 6ft above the floor specifically for clocks, network copiers, fax machines, A/V and data equipment other than personal computers in copy rooms, circuits rated more than 20 Amps, or connected to a UPS that are intended to be in continuous use and are marked to differentiate them from other receptacles or circuits are excepted from the requirements. .*

K. DECLARATION OF REQUIRED CERTIFICATES OF INSTALLATION

Selections have been made based on information provided in this document. If any selection have been changed by permit applicant, an explanation should be included in Table E. Additional Remarks. These documents must be provided to the building inspector during construction and can be found online

Form/Title
NRCI-ELC-E - Must be submitted for all buildings

L. DECLARATION OF REQUIRED CERTIFICATES OF ACCEPTANCE

There are no NRCA forms required for this project.

STATE OF CALIFORNIA
Electrical Power Distribution
CALIFORNIA ENERGY COMMISSION

CERTIFICATE OF COMPLIANCE — **NRCC-ELC-E**

Project Name:	WASHINGTON UNION HIGH SCHOOL - STUDENT SERVICES	**Report Page:**	**(Page 6 of 6)**
Project Address:	6041 SOUTH ELM AVE., FRENSO, CA 93706	**Date Prepared:**	2025-03-20T19:25:00-04:00

DOCUMENTATION AUTHOR'S DECLARATION STATEMENT

I certify that this Certificate of Compliance documentation is accurate and complete.

Documentation Author Name: Steve Eastham	Documentation Author Signature:
Company: Rose Sing Eastham	Signature Date: 03-21-25
Address: 131 S. DUNWORTH ST	CEA/ HERS Certification Identification (if applicable):
City/State/Zip: VISALIA, CA 93292-6705	Phone: (559) 733 - 2671 EXT. 101

RESPONSIBLE PERSON'S DECLARATION STATEMENT

I certify the following under penalty of perjury, under the laws of the State of California:

1. The information provided on this Certificate of Compliance is true and correct.
2. I am eligible under Division 3 of the Business and Professions Code to accept responsibility for the building design or system design identified on this Certificate of Compliance (responsible designer)
3. The energy features and performance specifications, materials, components, and manufactured devices for the building design or system design identified on this Certificate of Compliance conform to the requirements of Title 24, Part 1 and Part 6 of the California Code of Regulations.
4. The building design features or system design features identified on this Certificate of Compliance are consistent with the information provided on other applicable compliance documents, worksheets, calculations, plans and specifications submitted to the enforcement agency for approval with this building permit application.
5. I will ensure that a completed signed copy of this Certificate of Compliance shall be made available with the building permit(s) issued for the building, and made available to the enforcement agency for all applicable inspections. I understand that a completed signed copy of this Certificate of Compliance is required to be included with the documentation the builder provides to the building owner at occupancy.

Responsible Designer Name: Steve Eastham	Responsible Designer Signature:
Company: Rose Sing Eastham	Date Signed: 03-21-25
Address: 131 S. DUNWORTH ST	license: E18786
City/State/Zip: VISALIA, CA 93292-6705	Phone: (559) 733 - 2671 EXT. 101

Rose Sing Eastham & Associates
Electrical Consultants
131 S. Dunworth – (559)733–2671
Visalia, California 93292–6705

REGISTERED PROFESSIONAL ENGINEER — STEVEN KIRK EASTHAM — No. E-18786 Exp. 6/30/27 — ELECTRICAL — STATE OF CALIFORNIA

IDENTIFICATION STAMP
DIV. OF THE STATE ARCHITECT
APP: 02-123307 INC:
REVIEWED FOR
SS ☑ FLS ☑ ACS ☑
DATE: 10/15/2025

Owner:
WASHINGTON UNIFIED SCHOOL DISTRICT

WASHINGTON UNIFIED SCHOOL DISTRICT
6041 SOUTH ELM AVE.
FRESNO, CA 93706

Project Name:
STUDENT SERVICES

Project Address:
WASHINGTON UNION HIGH SCHOOL
6041 SOUTH ELM AVE,
Fresno, CA 93706

integrated designs
by SOMAM, Inc.

ARCHITECTURE
ENGINEERING
INTERIOR DESIGN

6011 N. FRESNO STREET, SUITE 130
FRESNO CALIFORNIA 93710
P:(559) 436-0881 F:(559) 436-0887
E: design@somam.com
integrateddesigns.com

Ownership of Documents

This document, the ideas and designs incorporated herein, as an instrument of Professional Service is the property of Integrated Designs by SOMAM Inc. and is not to be used, in whole or in part for any other project without written authorization.
© COPYRIGHT 2020

Stamp:

Sheet Title:
POWER COMPLIANCE

Job No.:
5613

Sheet No.:
E0.04

Release: DSA — Issue Date: 04-23-25

1" = 50'-0" 1" = 40'-0" 1" = 30'-0" 1" = 20'-0" 1/4" = 1'-0" 1/8" = 1'-0"

Z:\Drafting\Jobs\RSES\5XXX\5613 Washington High School\5613 Washington Union HS - Student Services Bldg\01\dt.dwg DATE: 5/4/23 03/27/25 Blt: Karen DATE PLOTTED: 10/15/25 4:00 # 25-0dB-5E

STATE OF CALIFORNIA
Solar And Battery
CALIFORNIA ENERGY COMMISSION

CERTIFICATE OF COMPLIANCE **NRCC-SAB-E**

This document is used to demonstrate compliance with prescriptive PV and battery requirements in 140.10/ 170.2 for nonresidential, multifamily and mixed-use buildings and prescriptive solar thermal requirements in 170.2(d)3C for multifamily and hotel/ motel occupancies. When PV/battery/solar thermal requirements don't apply or are traded using the performance approach, this document demonstrates compliance with mandatory solar readiness requirements in 110.10/ 160.8 for newly constructed buildings which are either multifamily ten stories or fewer, hotel/motel ten stories or fewer or all other nonresidential buildings three stories or fewer. It is also used to demonstrate compliance with solar readiness in 110.10/ 160.8 for additions to nonresidential, multifamily or hotel/motel building types which add more than 2,000 ft² of roof area. Alterations, or additions of less than 2,000 ft² of roof area, are not required to comply with solar readiness, solar PV and battery requirements and do not need to complete this document.

Project Name:	WASHINGTON UNION HIGH SCHOOL - STUDENT SERVICES	**Report Page:**	**(Page 1 of 6)**
Project Address:	6041 SOUTH ELM AVE, FRESNO, CA 93706	**Date Prepared:**	2025-03-20T18:58:15-04:00

A. GENERAL INFORMATION

01	Project Location (city)	FRESNO	04	Building Occupancies	OfficeSchool or Classroom
02	Climate Zone	13	05	Construction Type	New construction
03	Conditioned Floor Area (ft²)	8920	06	Number of Stories	Bldg <= 3 stories

B. PROJECT SCOPE

The compliance path the project is using to comply per 110.10(b)1B/ 140.10/ 170.2(g and h) is indicated below.

Compliance with Solar Photovoltaic (PV) and Battery Requirements in 140.10/ 170.2(g and h)

01		
☒	Provided PV system and battery storage sized per 140.10/ 170.2 (g and h)	The project has included an installed PV system and battery storage system per requirements in 140.10/ 170.2(g and h) as documented in Table J.
☐	Exception to PV and Battery: Not enough Solar Access Roof Area	The total of all available Solar Access Roof Area(s) of the project site is less than three percent of the conditioned floor area as documented in Table J.
☐	Exception to PV and Battery: Required PV < 4kW	The required PV system size is less than 4 kW dc as documented in Table J..
☐	Exception to PV and Battery: No contiguous Solar Access Roof Area	The Solar Access Roof Area(s) of the project site contains less than 80 contiguous square feet as documented in Table J.
☐	Exception to PV and Battery: Can't meet snow load	The project has a roof design where the enforcement authority has verified it is not possible for the PV system, including panels, modules, components, supports, and attachments to the roof structure, to meet ASCE 7-16 Chapter 7, Snow Loads.
☐	Exception to PV and Battery: Multi-tenant without VNEM or Community Solar	The project is a multi-tenant building in an area where a load serving entity does not provide either a Virtual Net Metering (VNEM) or community solar program.
☐	The prescriptive PV/battery requirement has been traded off using the performance compliance approach as documented on the PRF Certificate of Compliance form.	

STATE OF CALIFORNIA
Solar And Battery
CALIFORNIA ENERGY COMMISSION

CERTIFICATE OF COMPLIANCE **NRCC-SAB-E**

Project Name:	WASHINGTON UNION HIGH SCHOOL - STUDENT SERVICES	**Report Page:**	**(Page 4 of 6)**
	6041 SOUTH ELM AVE, FRESNO, CA 93706	**Date Prepared:**	2025-03-20T18:58:15-04:00

J. PHOTOVOLTAIC (PV) AND BATTERY SYSTEMS

This table documents compliance with prescriptive photovoltaic and battery system requirements in 140.10/ 170.2(g and h). Unless the project meets one of the listed exceptions, or trades-off PV in an energy model using performance path, 140.10/ 170.2(g and h) requires installed photovoltaic and battery systems for newly constructed buildings. The installed PV systems must meet the minimum requirements in Joint Appendix 11.

Photovoltaic (PV) System

01	02	03	04	05	06	07	08
Occupancy	Conditioned Floor Area (ft²)	Area of New Roof[1] (ft²)	Roof Area < 70% Solar Access[2] (ft²)	Plansheet or Document showing Solar Access Calculations	Occupied Roof Area[3] (ft²)	Solar Access Roof Area (SARA) (ft²)	Min Size of PV System Required (kWdc)
School or Classroom	8,920	7,717	0	E2.21	2,966	4,751	14.54
					Total Min Size PV System Required for all Spaces (kWdc):		14.54
					Total Size PV System in Design (kWdc):		14.94

[1]*FOOTNOTES: Includes the area of the building's roof space capable of structurally supporting a PV system and the area of all roof space on covered parking areas, carports, and all other newly constructed structures on the site that are compatible with supporting a PV system per Title 24, Part 2 Section 1511.2.*
[2]*Solar access must be determined using CEC approved solar access calculation tools found at https://www.energy.ca.gov/programs-and-topics/programs/building-energy-efficiency-standards/solar-assessment-tools.*
[3]*As specified by CBC Section 503.1.4.*

Battery Storage System

01	02	03	04	05
Space Type	Min Size of PV Applicable To Battery Sizing (kWdc)	Rated Single Charge-Discharge AC Efficiency of Battery System[1]	Min Battery Rated Energy Capacity Required (kWh)	Min Power Capacity of Battery Required (kWdc)
School or Classroom	14.54	0.97	27.6	6.68
		Total Min Energy (kWh) and Power (kW) Capacity Required	27.61	6.69
		Total Energy (kWh) and Power (kW) Capacity in Design	28.6	12

[1]*FOOTNOTE: Rated single charge-discharge cycle AC to AC (round trip) efficiency of the battery storage system*

STATE OF CALIFORNIA
Solar And Battery
CALIFORNIA ENERGY COMMISSION

CERTIFICATE OF COMPLIANCE **NRCC-SAB-E**

Project Name:	WASHINGTON UNION HIGH SCHOOL - STUDENT SERVICES	**Report Page:**	**(Page 2 of 6)**
	6041 SOUTH ELM AVE, FRESNO, CA 93706	**Date Prepared:**	2025-03-20T18:58:15-04:00

Compliance with Solar Thermal Water Heating Requirements in 170.2(d)3C (Multifamily and hotel/ motel occupancies only)

01	
☐	The project includes a hotel/motel or multifamily occupancy with a gas or propane central water-heating system (serves 2+ dwelling units) and includes a permanently installed domestic solar water-heating system to comply with 170.2(d)3C and Reference Residential Appendix RA4, as documented in Table H.
	Compliance meets Exception 2 to solar ready requirements in 110.10(b).

C. COMPLIANCE RESULTS

Results in this table are automatically calculated from data input and calculations in Tables F through I. Note: If any cell on this table says "DOES NOT COMPLY" or "COMPLIES with Exceptional Conditions" refer to Table D. for guidance or see the applicable Table referenced below.

Allocated Solar Zone				Installed PV System				Installed SWH System				Smart Tstat and Alternative EE Measure		Compliance Results
01		02		03		04		05		06		07	08	
Required Minimum Area (ft²)	<=	Designated Area (ft²)	OR	Required Minimum DC Power Rating (Watts)	<=	Designed DC Power Rating (Watts)	OR	Required Minimum Solar Savings Fraction	<=	Designed/Rated Solar Savings Fraction	OR	JA5 Compliant Thermostat Specified?	Alternative Energy Efficiency Measure	
(See Table F)				(See Tables G or J)				(See Table H)				(See Table I)		
	<=		OR	14,540	<=	14,940	OR		<=		OR			
Location in construction documents showing the location for inverters and metering equipment and a pathway for the routing of conduit/ plumbing to the electrical service/ water heating system per §110.10(c).														
Battery storage system design meets the minimum requirements in Joint Appendix JA12 and the minimum energy (kWh)/ power (kW) capacity per Table J.														COMPLIES

D. EXCEPTIONAL CONDITIONS

This table is auto-filled with uneditable comments because of selections made or data entered in tables throughout the form.

E. ADDITIONAL REMARKS

This table is includes remarks made by the permit applicant to the Authority Having Jurisdiction.

STATE OF CALIFORNIA
Solar And Battery
CALIFORNIA ENERGY COMMISSION

CERTIFICATE OF COMPLIANCE **NRCC-SAB-E**

Project Name:	WASHINGTON UNION HIGH SCHOOL - STUDENT SERVICES	**Report Page:**	**(Page 3 of 6)**
	6041 SOUTH ELM AVE, FRESNO, CA 93706	**Date Prepared:**	2025-03-20T18:58:15-04:00

F. ALLOCATED SOLAR ZONE

This section does not apply to this project.

G. PERMANENTLY INSTALLED SOLAR PV FOR SOLAR READY EXCEPTION

This section does not apply to this project.

H. PERMANENTLY INSTALLED SOLAR HOT WATER SYSTEMS

This section does not apply to this project.

I. SMART THERMOSTATS AND ALTERNATIVE EFFICIENCY MEASURE FOR SOLAR READY EXCEPTION

This section does not apply to this project.

STATE OF CALIFORNIA
Solar And Battery
CALIFORNIA ENERGY COMMISSION

CERTIFICATE OF COMPLIANCE **NRCC-SAB-E**

Project Name:	WASHINGTON UNION HIGH SCHOOL - STUDENT SERVICES	**Report Page:**	**(Page 5 of 6)**
	6041 SOUTH ELM AVE, FRESNO, CA 93706	**Date Prepared:**	2025-03-20T18:58:15-04:00

K. DECLARATION OF REQUIRED CERTIFICATES OF INSTALLATION

Selections have been made based on information provided in this document. If any selections have been changed by the permit applicant, an explanation should be included Table E. Additional Remarks and ExceptionalConditionMessageCCSABE += UserChangedSelectionInCl. These documents must be provided to the building inspector during construction and can be found online

Form/Title
NRCI-SAB-01-E - Must be submitted for all buildings that must comply with solar readiness or PV/Battery requirements.

L. DECLARATION OF REQUIRED CERTIFICATES OF ACCEPTANCE

There are no forms required for this project.

STATE OF CALIFORNIA
Solar And Battery
CALIFORNIA ENERGY COMMISSION

CERTIFICATE OF COMPLIANCE **NRCC-SAB-E**

Project Name:	WASHINGTON UNION HIGH SCHOOL - STUDENT SERVICES	**Report Page:**	**(Page 6 of 6)**
Project Address:	6041 SOUTH ELM AVE, FRESNO, CA 93706	**Date Prepared:**	2025-03-20T18:58:15-04:00

DOCUMENTATION AUTHOR'S DECLARATION STATEMENT

I certify that this Certificate of Compliance documentation is accurate and complete.

Documentation Author Name: Steve Eastham	Documentation Author Signature:
Company: Rose Sing Eastham	Signature Date: 03-21-25
Address: 131 S. DUNWORTH ST	CEA/ HERS Certification Identification (if applicable):
City/State/Zip: VISALIA, CA 93292-6705	Phone: (559) 733 - 2671 EXT. 101

RESPONSIBLE PERSON'S DECLARATION STATEMENT

I certify the following under penalty of perjury, under the laws of the State of California:

1. The information provided on this Certificate of Compliance is true and correct.
2. I am eligible under Division 3 of the Business and Professions Code to accept responsibility for the building design or system design identified on this Certificate of Compliance (responsible designer)
3. The energy features and performance specifications, materials, components, and manufactured devices for the building design or system design identified on this Certificate of Compliance conform to the requirements of Title 24, Part 1 and Part 6 of the California Code of Regulations.
4. The building design features or system design features identified on this Certificate of Compliance are consistent with the information provided on other applicable compliance documents, worksheets, calculations, plans and specifications submitted to the enforcement agency for approval with this building permit application.
5. I will ensure that a completed signed copy of this Certificate of Compliance shall be made available with the building permit(s) issued for the building, and made available to the enforcement agency for all applicable inspections. I understand that a completed signed copy of this Certificate of Compliance is required to be included with the documentation the builder provides to the building owner at occupancy.

Responsible Designer Name: Steve Eastham	Responsible Designer Signature:
Company: Rose Sing Eastham	Date Signed: 03-21-25
Address: 131 S. DUNWORTH ST	License: E18786
City/State/Zip: VISALIA, CA 93292-6705	Phone: (559) 733 - 2671 EXT. 101

Rose Sing Eastham & Associates
Electrical Consultants
131 S. Dunworth – (559)733-2671
Visalia, California 93292-6705

REGISTERED PROFESSIONAL ENGINEER
No. E-18786
Exp. 6/30/27
ELECTRICAL
STATE OF CALIFORNIA

IDENTIFICATION STAMP
DIV. OF THE STATE ARCHITECT
APP: 02-123307 INC:
REVIEWED FOR
SS ☑ FLS ☑ ACS ☑
DATE: 10/15/2025

Owner:
WASHINGTON UNIFIED SCHOOL DISTRICT

WASHINGTON UNIFIED SCHOOL DISTRICT
6041 SOUTH ELM AVE.
FRESNO, CA 93706

Project Name:
STUDENT SERVICES

Project Address:
WASHINGTON UNION HIGH SCHOOL
6041 SOUTH ELM AVE,
Fresno, CA 93706

integrated designs
by SOMAM, Inc.

ARCHITECTURE
ENGINEERING
INTERIOR DESIGN

6011 N. FRESNO STREET, SUITE 130
FRESNO CALIFORNIA 93710
P:(559) 436-0881 F:(559) 436-0887
E: design@somam.com
integrateddesigns.com

Ownership of Documents
This document, the ideas and designs incorporated herein, as an instrument of Professional Service is the property of Integrated Designs by SOMAM Inc. and is not to be used, in whole or in part for any other project without written authorization.
© COPYRIGHT 2020

Stamp:

Sheet Title:
SOLAR AND BATTERY COMPLIANCE

Job No.: **5613**

Sheet No.: **E0.05**

Release: DSA Issue Date: 04-23-25

1" = 50'-0" 1" = 40'-0" 1" = 30'-0" 1" = 20'-0" 1/8" = 1'-0" 1/4" = 1'-0"

Z:\Drafting\Jobs\KES\SCHOOLS\Fresno\Washington High School\5613 Washington Union HS - Student Services Bldg\E0.05.dwg DATE: 3/27/25 BY: Kevin DATE PLOTTED: 04/9/25 .486 P. 25-.408-SE

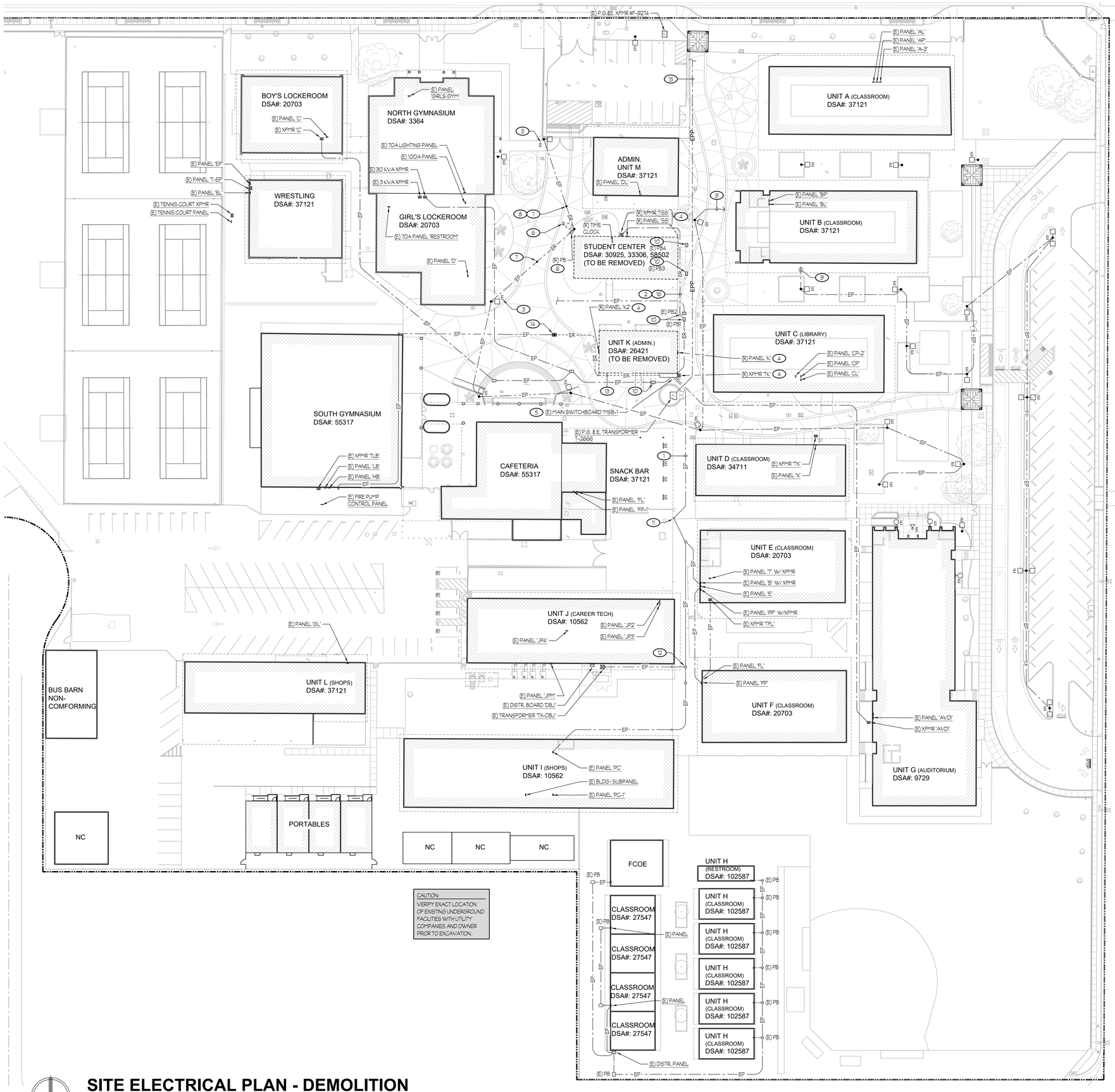

NOTES (THIS SHEET ONLY):

1. — – – EP — – – DENOTES THE APPROXIMATE LOCATION OF EXISTING 'POWER' FEEDERS AND/OR 'SPARE' CONDUITS. VERIFY EXACT LOCATION AT SITE.
2. ——— – ER – – ——— DISCONNECT AND REMOVE EXISTING CONDUIT / CABLES TO CLEAR WAY FOR NEW CONSTRUCTION. VERIFY EXACT LOCATION AT SITE.
3. TYPICAL OF EXISTING ELECTRICAL DEVICES, KEYNOTED WITH SUBSCRIPT 'E', U.O.N.. EXISTING DEVICE TO REMAIN. RECONNECT TO EXISTING CIRCUIT AS REQUIRED FOR ANY UPSTREAM DEVICES REMOVED.
4. TYPICAL OF ELECTRICAL DEVICES, KEYNOTED WITH SUBSCRIPT 'R': DISCONNECT AND REMOVE EXISTING DEVICE INCLUDING CIRCUIT WIRING AND CONDUIT TO SOURCE OF SUPPLY OR REMAINING FEEDING DEVICE, U.O.N..
5. EXISTING MAIN SWITCHBOARD TO REMAIN IN SERVICE DURING DEMOLITION OF EXISTING BUILDING AND CONSTRUCTION OF NEW STUDENT SERVICES BLDG. PROTECT IN PLACE DURING CONSTRUCTION.
6. EXISTING POLE LIGHT AND ADJACENT PULL BOX TO BE REMOVED. CABLING TO BE REROUTED PER KEYNOTE #7.
7. FIELD VERIFY EXACT LOCATION OF EXISTING UNDERGROUND POLE LIGHT CONDUIT. PROVIDE NEW PULL AND LOCATE OUTSIDE OF NEW STUDENT SERVICES BUILDING. INTERCEPT AND EXTEND EXISTING CONDUIT TO NEW PULL BOX. PULL BACK EXISTING CABLING TO NEW PULL BOX AND REMOVE IDLE CONDUIT TO CLEAR WAY FOR NEW CONSTRUCTION.
8. SEE PARTIAL SITE ELECTRICAL PLAN, SHEET #E1.13, FOR LOCATION OF NEW PULL BOX.
9. EXISTING LIGHT POLE CIRCUITS FED FROM PANEL 'BL', CIRCUITS #10 & 12. FIELD VERIFY THE SPECIFIC CIRCUIT OF THE LIGHT POLE TO BE REMOVED.
10. EXISTING PULL BOX TO REMAIN. PROTECT IN PLACE DURING CONSTRUCTION.
11. EXISTING 2"C. RISER TO ROOF. TYPICAL, U.O.N..
12. EXISTING PULL CANS ON ROOF. TYPICAL, U.O.N..
13. EXISTING SURFACE MOUNTED CONDUIT ALONG EXTERIOR OF BUILDING 'UNIT K'. PROVIDE TEMPORARY CONNECTION FROM MAIN SWITCHBOARD 'MSB-1' TO PULLBOX DURING DEMOLITION PHASE OF PROJECT FOR FEEDS TO REMAIN ENERGIZED DURING CONSTRUCTION. FIELD VERIFY CONDUIT AND CONDUCTORS, EXPECTED TO BE (2) 3"C – 4 #250 KCMIL + 1 #1 GND. EACH.
14. INTERCEPT EXISTING CONDUIT WITH INGROUND PULLBOX (24" x 36") FOR TEMPORARY CONNECTION DURING DEMOLITION PHASE.
15. ——— ESP ——— DENOTES THE APPROXIMATE LOCATION OF EXISTING P.G.&E. 'SECONDARY' CONDUIT AND CONDUCTORS. VERIFY EXACT LOCATION AT SITE.
16. VERIFY FEEDER CONTENTS PRIOR TO DEMOLITION.

GENERAL NOTE:

1. REFER TO CIVIL SHEET #C2, FOR TOPOGRAPHIC SURVEY.

SITE ELECTRICAL PLAN - DEMOLITION

STUDENT SERVICES

SCALE: 1" = 30'-0"

Rose Sing Eastham & Associates
Electrical Consultants
131 S. Dunworth – (559)733-2671
Visalia, California 93292-6705

REGISTERED PROFESSIONAL ENGINEER — ROBERT KIRK EASTHAM — No. E-18786 Exp. 6/30/27 — ELECTRICAL — STATE OF CALIFORNIA

IDENTIFICATION STAMP
DIV. OF THE STATE ARCHITECT
APP: 02-123307 INC:
REVIEWED FOR
SS ☑ FLS ☑ ACS ☑
DATE: 10/15/2025

Owner:
WASHINGTON UNIFIED SCHOOL DISTRICT

WASHINGTON UNIFIED SCHOOL DISTRICT
6041 SOUTH ELM AVE.
FRESNO, CA 93706

Project Name:
STUDENT SERVICES

Project Address:
WASHINGTON UNION HIGH SCHOOL
6041 SOUTH ELM AVE,
Fresno, CA 93706

integrated designs
by SOMAM, Inc.

ARCHITECTURE
ENGINEERING
INTERIOR DESIGN

6011 N. FRESNO STREET, SUITE 130
FRESNO CALIFORNIA 93710
P:(559) 436-0881 F:(559) 436-0887
E: design@somam.com
integrateddesigns.com

Ownership of Documents
This document, the ideas and designs incorporated herein, as an instrument of Professional Service is the property of Integrated Designs by SOMAM Inc. and is not to be used, in whole or in part for any other project without written authorization.
© COPYRIGHT 2020

Stamp:

Sheet Title:
SITE ELECTRICAL PLAN - DEMOLITION

Job No.: **5613**

Sheet No.: **E1.10**

Release: DSA Issue Date: 04-23-25

Z:\Drafting\Jobs\KDS\SCHOOLS\Fresno\Washington High School\5613 Washington Union HS - Student Services Bldg\E1.10.dwg DATE: 5/4/2025 09:19:05 BY: Kevin PLOTTED: 09/19/25 JOB #: 25-008-SE

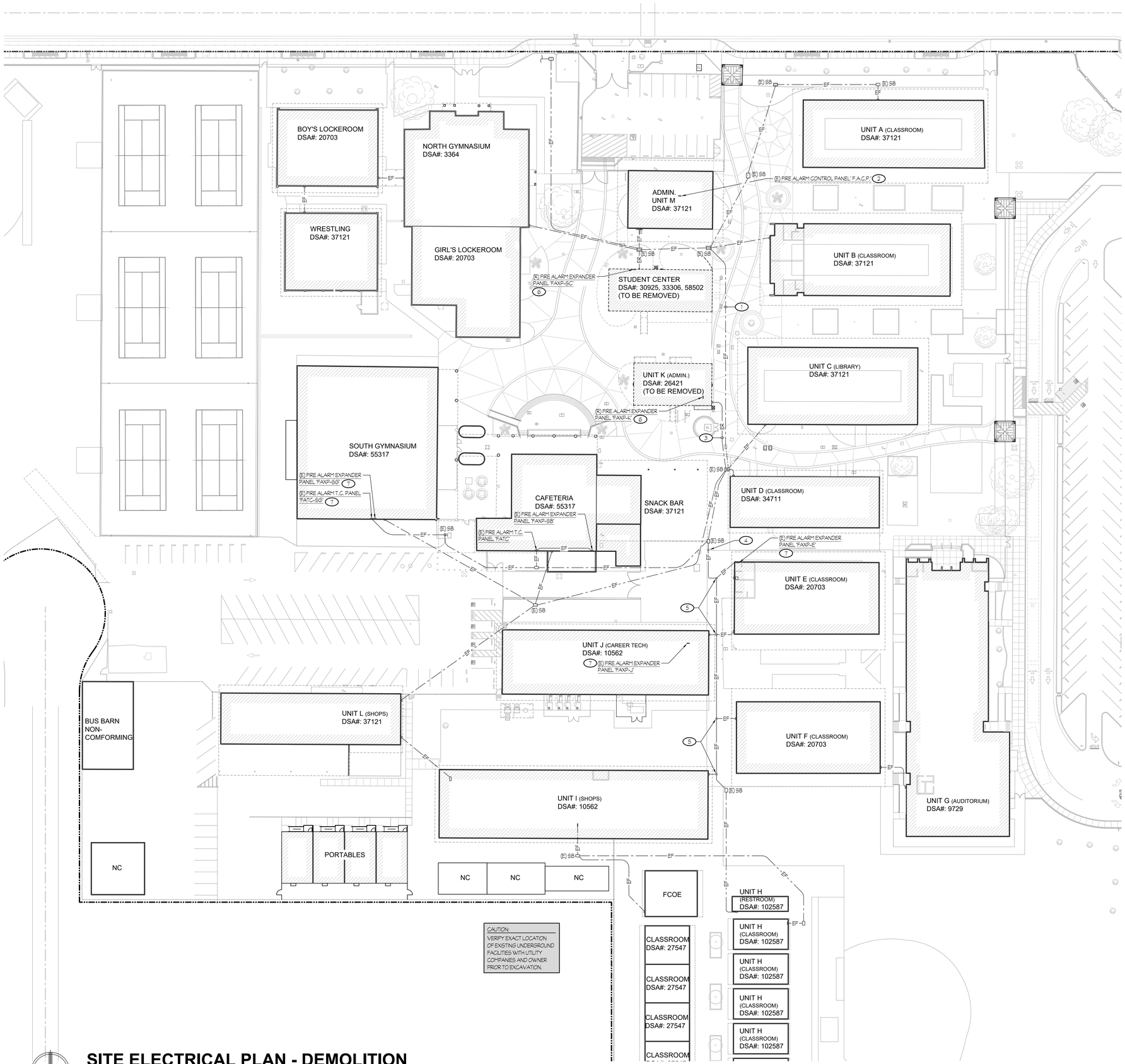

NOTES (THIS SHEET ONLY):

1. — – – EF — – – DENOTES THE APPROXIMATE LOCATION OF EXISTING 'FIRE ALARM' FEEDERS AND/OR 'SPARE' CONDUITS. VERIFY EXACT LOCATION AT SITE.
2. EXISTING FACP INCLUDES VOICE EVACUATION MICROPHONE AND IS LOCATED IN CONSTANTLY ATTENDED LOCATION. FED FROM PANEL 'DP', CIRCUIT #23. INSTALLED UNDER DSA APPLICATION #02-112370, AND APPROVED ON JUNE 8, 2012.
3. ——— – – ER – – ——— DISCONNECT AND REMOVE EXISTING CONDUIT / CABLES BETWEEN TO CLEAR WAY FOR NEW CONSTRUCTION. VERIFY EXACT LOCATION AT SITE.
4. EXISTING 2"C. RISER TO ROOF.
5. EXISTING PULL CANS ON ROOF.
6. TYPICAL OF ELECTRICAL DEVICES, KEYNOTED WITH SUBSCRIPT 'R': DISCONNECT AND REMOVE EXISTING DEVICE INCLUDING CIRCUIT WIRING AND CONDUIT TO SOURCE OF SUPPLY OR REMAINING FEEDING DEVICE, U.O.N..
7. TYPICAL OF EXISTING ELECTRICAL DEVICES, KEYNOTED WITH SUBSCRIPT 'E', U.O.N.. EXISTING DEVICE TO REMAIN. RECONNECT TO EXISTING CIRCUIT AS REQUIRED FOR ANY UPSTREAM DEVICES REMOVED.

SITE ELECTRICAL PLAN - DEMOLITION

STUDENT SERVICES

SCALE: 1" = 30'-0"

IDENTIFICATION STAMP
DIV. OF THE STATE ARCHITECT
APP: 02-123307 INC:
REVIEWED FOR
SS ☑ FLS ☑ ACS ☑
DATE: 10/15/2025

Owner:

WASHINGTON UNIFIED SCHOOL DISTRICT
6041 SOUTH ELM AVE.
FRESNO, CA 93706

Project Name:

STUDENT SERVICES

Project Address:

WASHINGTON UNION HIGH SCHOOL
6041 SOUTH ELM AVE,
Fresno, CA 93706

integrated designs
by SOMAM, Inc.

**ARCHITECTURE
ENGINEERING
INTERIOR DESIGN**

6011 N. FRESNO STREET, SUITE 130
FRESNO CALIFORNIA 93710
P:(559) 436-0881 F:(559) 436-0887
E: design@somam.com
integrateddesigns.com

Ownership of Documents
This document, the ideas and designs incorporated herein, as an instrument of Professional Service is the property of Integrated Designs by SOMAM Inc. and is not to be used, in whole or in part for any other project without written authorization.
© COPYRIGHT 2020

Stamp:

Sheet Title:

SITE ELECTRICAL PLAN - DEMOLITION

Job No.: **5613**

Sheet No.: **E1.11**

Release: DSA Issue Date: 04-23-25

Rose Sing Eastham & Associates
Electrical Consultants
131 S. Dunworth – (559)733-2671
Visalia, California 93292-6705

REGISTERED PROFESSIONAL ENGINEER
ROBERT KIRK EASTHAM
No. E-18786
Exp. 6/30/27
ELECTRICAL
STATE OF CALIFORNIA

Z:\Drafting\Jobs\KES\SCHOOLS\Fresno\Washington High School\5613 Washington Union HS - Student Services Bldg\E1.11.dwg DATE, PLOTTED: 10/15/25 BY: Kevin JOB # 25-008-SE

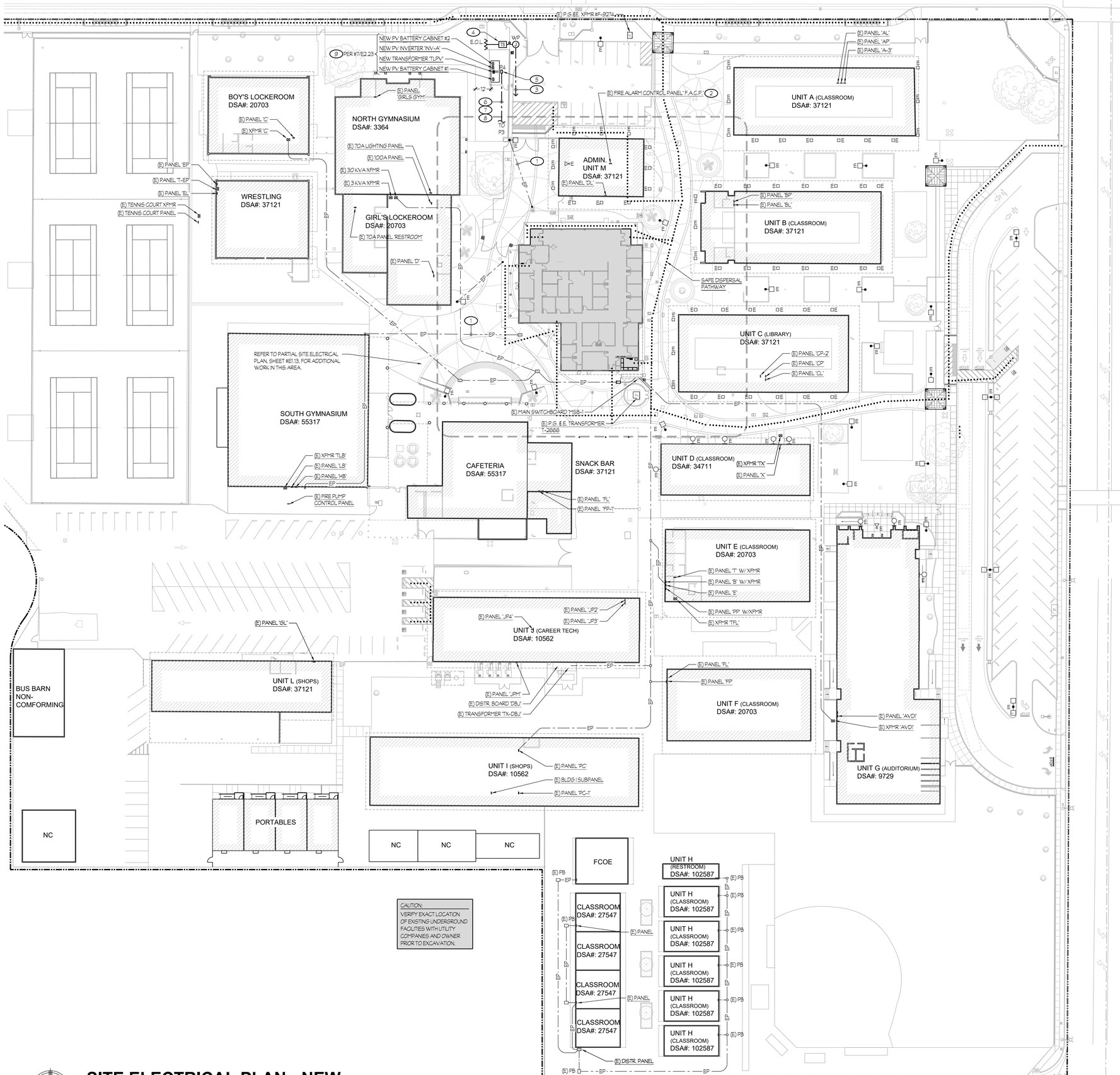

NOTES (THIS SHEET ONLY):

1. — — —EP— — — DENOTES THE APPROXIMATE LOCATION OF EXISTING 'POWER' FEEDERS AND/OR 'SPARE' CONDUITS. VERIFY EXACT LOCATION AT SITE.
2. EXISTING FIRE ALARM CONTROL PANEL. PROVIDE NEW COMPONENTS AND PROGRAMMING PER FIRE ALARM PLANS AS REQUIRED.
3. RUN 3/4"c - 2 #14 TO DUAL MONITOR MODULES 'I1-Ox', SEE SHEET #E4.10.
4. CONNECT TAMPER SWITCH AT THE POST INDICATOR VALVE 'P.I.V.'. RUN 1/2" LIQUIDTIGHT FLEXIBLE METALLIC CONDUIT WITH 2 #14 INSIDE TO TAMPER SITCH AND PROVIDE AND END-OF-LINE RESISTOR 'E.O.L.'. SECURE CONDUIT TO PIPING WITH 1/2" WIDE STAINLESS STEEL STRAPPING. PROVIDE A TWO-DEVICE DIECAST WEATHERPROOF JUNCTION BOX WITH A BLANK GASKETED COVER AND MOUNT AT +6' A.F.G.. PROVIDE AN ADDITIONAL GALVANIZED RIGID STEEL CONDUIT, MINIMUM OF 24" LONG,WRAPPED WITH PVC TAPE TO SUPPORT WEATHERPROOF JUNCTION BOX. COORDINATE EXACT LOCATION WITH FIRE SPRINKLER CONTRACTOR PRIOR TO ROUGH-IN.
5. REFER TO DETAIL #1/E7.03 FOR PULL BOX REQUIREMENTS. TYPICAL, U.O.N., WHERE FEEDER OR BRANCH CIRCUIT CONDUCTORS ARE ROUTING THROUGH THE PULL BOX, PROVIDE GROUNDING AND BONDING OF THE STEEL CHECKER-PLATE COVER PER DETAIL #2/E7.03.
6. REFER TO DETAIL #3/E7.03 FOR TRENCHING REQUIREMENTS.
7. REFER TO ONE LINE DIAGRAM SHEET #E6.02 FOR CONDUIT AND CONDUCTOR REQUIREMENTS.
8. SAWCUT AND PATCH EXISTING CONCRETE OR ASPHALT AS REQUIRED.
9. CONTRACTOR TO PROVIDE SHADE TO INVERTER SUCH THAT THE LCD SCREEN IS PROTECTED FROM DIRECT SUNLIGHT. ACCEPTABLE TO PROVIDE FIELD-MANUFACTURED COVER MOUNTED ABOVE INVERTER OR PRE-MANUFACTURED SOLAR INVERTER COVER THAT MAINTAINS A MIN 1.25" OVERHANG AND ALLOWS FOR VENTILATION AT SIDES AND TOP.

SITE ELECTRICAL PLAN - NEW

STUDENT SERVICES

SCALE: 1" = 30'-0"

IDENTIFICATION STAMP
DIV. OF THE STATE ARCHITECT
APP: 02-123307 INC:
REVIEWED FOR
SS ☑ FLS ☑ ACS ☑
DATE: 10/15/2025

Owner:

WASHINGTON UNIFIED SCHOOL DISTRICT

WASHINGTON UNIFIED SCHOOL DISTRICT
6041 SOUTH ELM AVE.
FRESNO, CA 93706

Project Name:

STUDENT SERVICES

Project Address:

WASHINGTON UNION HIGH SCHOOL
6041 SOUTH ELM AVE,
Fresno, CA 93706

integrated designs
by SOMAM, Inc.

ARCHITECTURE
ENGINEERING
INTERIOR DESIGN

6011 N. FRESNO STREET, SUITE 130
FRESNO CALIFORNIA 93710
P:(559) 436-0881 F:(559) 436-0887
E: design@somam.com
integrateddesigns.com

Ownership of Documents
This document, the ideas and designs incorporated herein, as an instrument of Professional Service is the property of Integrated Designs by SOMAM Inc. and is not to be used, in whole or in part for any other project without written authorization.
© COPYRIGHT 2020

Stamp:

Sheet Title:

SITE ELECTRICAL PLAN - NEW

Job No.: **5613**

Sheet No.: **E1.12**

Release: DSA Issue Date: 04-23-25

Rose Sing Eastham & Associates
Electrical Consultants
131 S. Dunworth – (559)733-2671
Visalia, California 93292-6705

REGISTERED PROFESSIONAL ENGINEER
CHRISTOPHER K. KIRK
No. E-18786
Exp. 6/30/27
ELECTRICAL
STATE OF CALIFORNIA

Z:\Drafting\Jobs\RSES\5613\DWG\5613 Washington High School\5613 Washington Union HS - Student Services Bldg\E1.12.dwg DATE: 04/23, 09/19/25 BY: Kevin DATE PLOTTED: 09/19/25 JOB # 25-088-SE

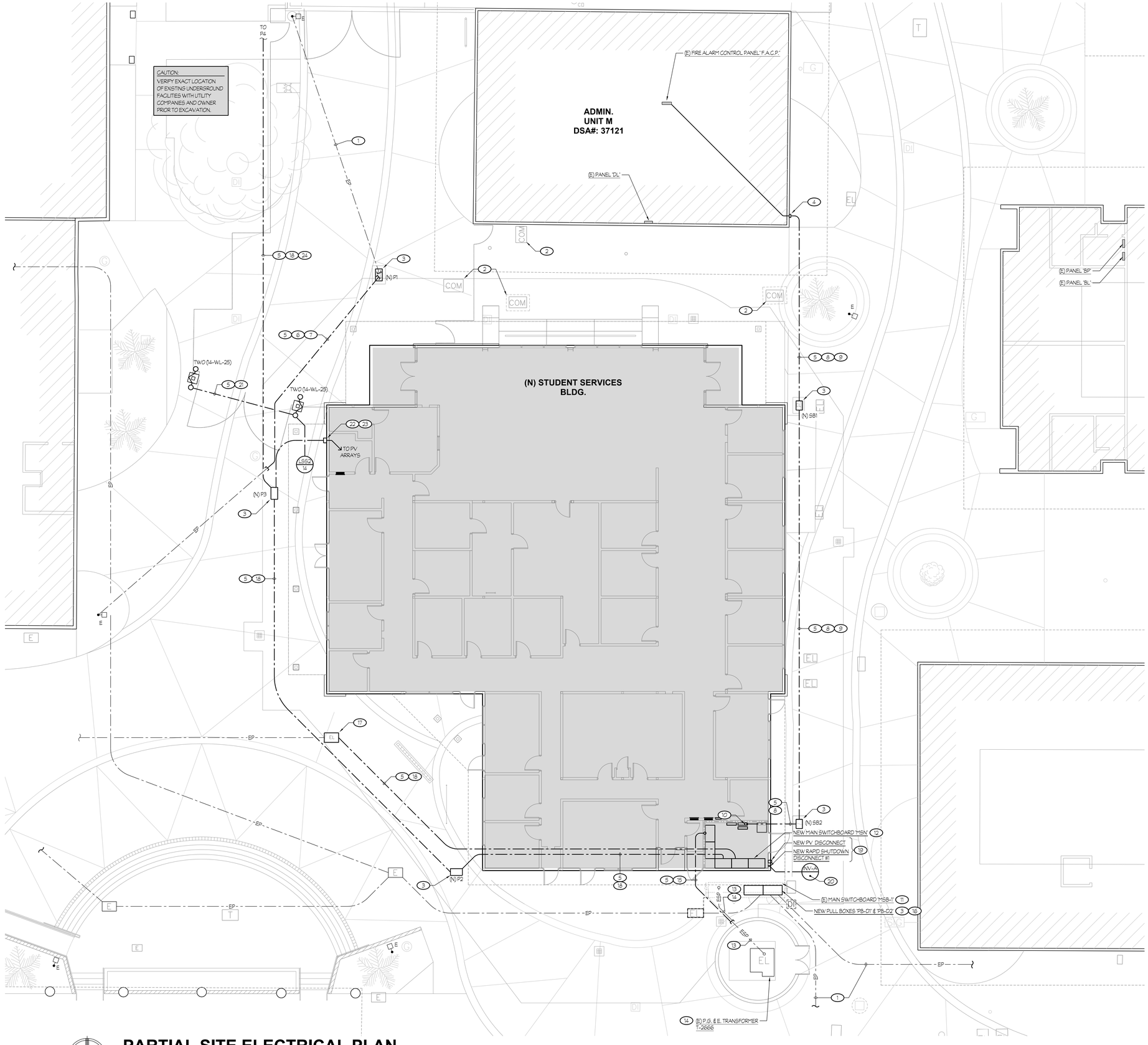

PARTIAL SITE ELECTRICAL PLAN

STUDENT SERVICES

SCALE: 1/8" = 1'-0"

NOTES (THIS SHEET ONLY):

1. — - - EP — - - DENOTES THE APPROXIMATE LOCATION OF EXISTING 'POWER' FEEDERS AND/OR 'SPARE' CONDUITS. VERIFY EXACT LOCATION AT SITE.
2. EXISTING COMMUNICATION PULL BOX. PROTECT IN PLACE DURING CONSTRUCTION. REFER TO SHEET #T1.10 FOR ADDITIONAL INFORMATION.
3. REFER TO DETAIL #1/E7.03 FOR PULL BOX REQUIREMENTS. TYPICAL, U.O.N., WHERE FEEDER OR BRANCH CIRCUIT CONDUCTORS ARE ROUTING THROUGH THE PULL BOX, PROVIDE GROUNDING AND BONDING OF THE STEEL CHECKER-PLATE COVER PER DETAIL #2/E7.03.
4. PROVIDE WEATHERPROOF BOX (MIN 12" x 12" x 6") FOR ROUTING OF FIRE ALARM CABLES. REFER TO DETAIL #6/E5.03 FOR MOUNTING REQUIREMENTS.
5. REFER TO DETAIL #3/E7.03 FOR TRENCHING REQUIREMENTS.
6. NEW 3/4" CONDUIT. EXTEND / PROVIDE NEW CONDUCTORS AS REQUIRED.
7. EXISTING LIGHT POLE CIRCUITS FED FROM PANEL 'BL', CIRCUITS #10 & 12. FIELD VERIFY THE SPECIFIC LIGHT POLE CIRCUIT. REMAINING POLE LIGHTS ARE TO BE RECONNECTED AND PROGRAMMED AS REQUIRED.
8. NEW 1 1/2" CONDUIT. NEW CABLES PER FIRE ALARM RISER DIAGRAM, SHEET #E5.02.
9. 2" SPARE CONDUIT.
10. CONDUIT RISER FROM UNDERSLAB. VERIFY EXACT CONNECTION POINT WITH GENERAL CONTRACTOR PRIOR TO ROUGH-IN.
11. EXISTING MAIN SWITCHBOARD 'MSB-1' TO REMAIN IN SERVICE DURING CONSTRUCTION OF NEW STUDENT SERVICES BLDG. PROTECT IN PLACE DURING CONSTRUCTION. CONNECT NEW STUDENT SERVICES BLDG PANELS TO THE EXISTING SWITCHBOARD UNTIL SERVICE IS READY TO TRANSFER TO NEW MAIN SWITCHBOARD 'MSN'.
12. NEW MAIN SERVICE SWITCHBOARD PER DETAIL #1/E7.02 AND ONE LINE DIAGRAM SHEET #E6.02.
13. — - - ESP — - - DENOTES THE APPROXIMATE LOCATION OF EXISTING P.G.&E. 'SECONDARY CONDUIT AND CONDUCTORS. VERIFY EXACT LOCATION AT SITE.
14. WHEN SERVICE IS READY TO BE TRANSFERRED TO NEW EQUIPMENT, COORDINATE WITH P.G.&E. TO REMOVE SECONDARY CONDUCTORS.
15. P.G.&E. SECONDARY CONDUITS PER APPROVED UTILITY PLANS.
16. PROVIDE NEW PULL BOX TO PICK-UP ANY EXISTING FEEDERS DISCONNECTED FROM EXISTING SWITCHBOARD 'MSB-1' THAT ARE TO REMAIN IN-USE. EXTEND EXISTING FEEDER CONDUCTORS TO NEW MATCHING CIRCUIT BREAKERS IN NEW MAIN SWITCHBOARD 'MSN'. COORDINATE EXACT LOCATION WITH ELECTRICAL CONTRACTOR PRIOR TO ROUGH-IN.
17. NEW 24" x 36" PULL BOX INSTALLED DURING DEMOLITION PHASE OF PROJECT.
18. REFER TO ONE LINE DIAGRAM SHEET #E6.02 FOR CONDUIT AND CONDUCTOR REQUIREMENTS.
19. MOUNT PV DISCONNECT AND RAPID SHUTDOWN SWITCH ADJACENT TO EACH OTHER AND IN LOCKABLE WEATHERPROOF ENCLOSURES. REFER TO ONE LINE DIAGRAM DETAIL #2/E6.02 FOR ADDITIONAL INFORMATION.
20. 1 1/2"C - 2C#8 (TO BE VERIFIED WITH MANUFACTURE).
21. 3/4"C - 2 #10 + 1 #10 GND.
22. PROVDE WEATHERPROOF PULL CAN (MIN 12" x 12" x 6") FOR ROUTING OF PV CIRCUITS TO EQUIPMENT LOCATIONS. PAINT PULL CAN AND EXPOSED CONDUIT TO MATCH EXTERIOR FINISH.
23. REFER TO ROOF SOLAR PLANS, SHEET E2.20 FOR CONDUIT AND CONDUCTOR REQUIREMENTS.
24. SAWCUT AND PATCH EXISTING CONCRETE OR ASPHALT AS REQUIRED.

IDENTIFICATION STAMP
DIV. OF THE STATE ARCHITECT
APP: 02-123307 INC:
REVIEWED FOR
SS ☑ FLS ☑ ACS ☑
DATE: 10/15/2025

Owner:

WASHINGTON UNIFIED SCHOOL DISTRICT

6041 SOUTH ELM AVE.
FRESNO, CA 93706

Project Name:

STUDENT SERVICES

Project Address:

WASHINGTON UNION HIGH SCHOOL
6041 SOUTH ELM AVE,
Fresno, CA 93706

integrated designs
by SOMAM, Inc.

ARCHITECTURE
ENGINEERING
INTERIOR DESIGN

6011 N. FRESNO STREET, SUITE 130
FRESNO CALIFORNIA 93710
P:(559) 436-0881 F:(559) 436-0887
E: design@somam.com
integrateddesigns.com

Ownership of Documents

This document, the ideas and designs incorporated herein, as an instrument of Professional Service is the property of Integrated Designs by SOMAM Inc. and is not to be used, in whole or in part for any other project without written authorization.

© COPYRIGHT 2020

Stamp:

Sheet Title:

PARTIAL SITE ELECTRICAL PLAN

Job No.: **5613**

Sheet No.: **E1.13**

Release: DSA Issue Date: 04-23-25

Rose Sing Eastham & Associates
Electrical Consultants
131 S. Dunworth – (559)733-2671
Visalia, California 93292-6705

REGISTERED PROFESSIONAL ENGINEER
JOSEPH KIRK EASTHAM
No. E-18786
Exp. 6/30/27
ELECTRICAL
STATE OF CALIFORNIA

Z:\Drafting\Jobs\PDF\5XXX\5613\Revit\Washington High School\5613 Washington Union HS - Student Services Bldg\E1.13.dwg [DATE: 5/4/23, 09/19/25 Sh: Xrefs DATE PLOTTED: 09/19/25 JOB # 25-088-SE

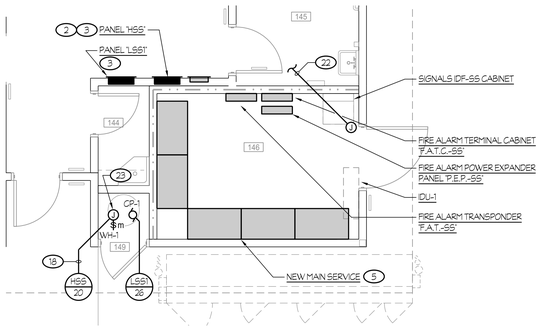

1 ENLARGED PARTIAL POWER PLAN
STUDENT SERVICES

SCALE: 1/4" = 1'-0"

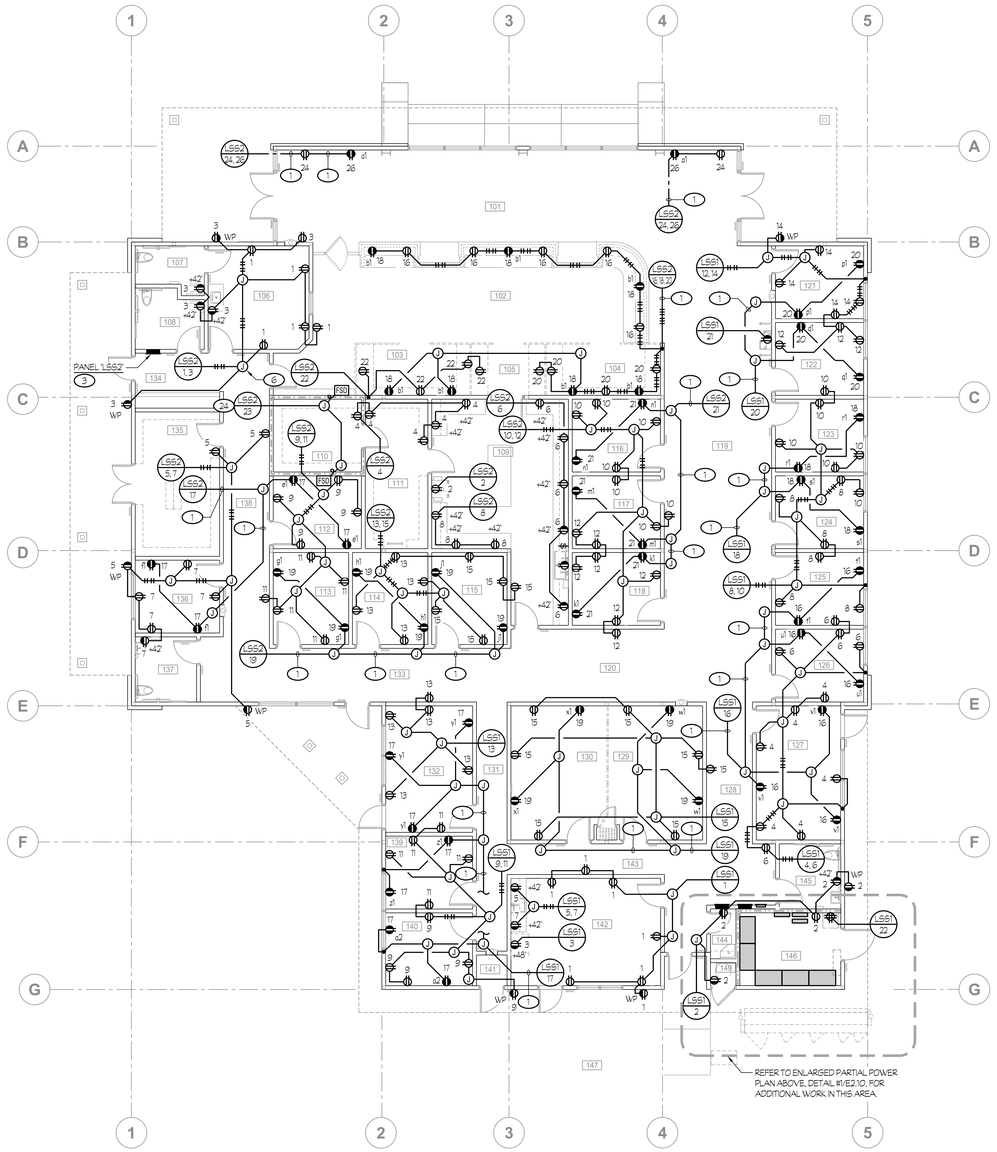

2 POWER PLAN
STUDENT SERVICES

SCALE: 1/8" = 1'-0"

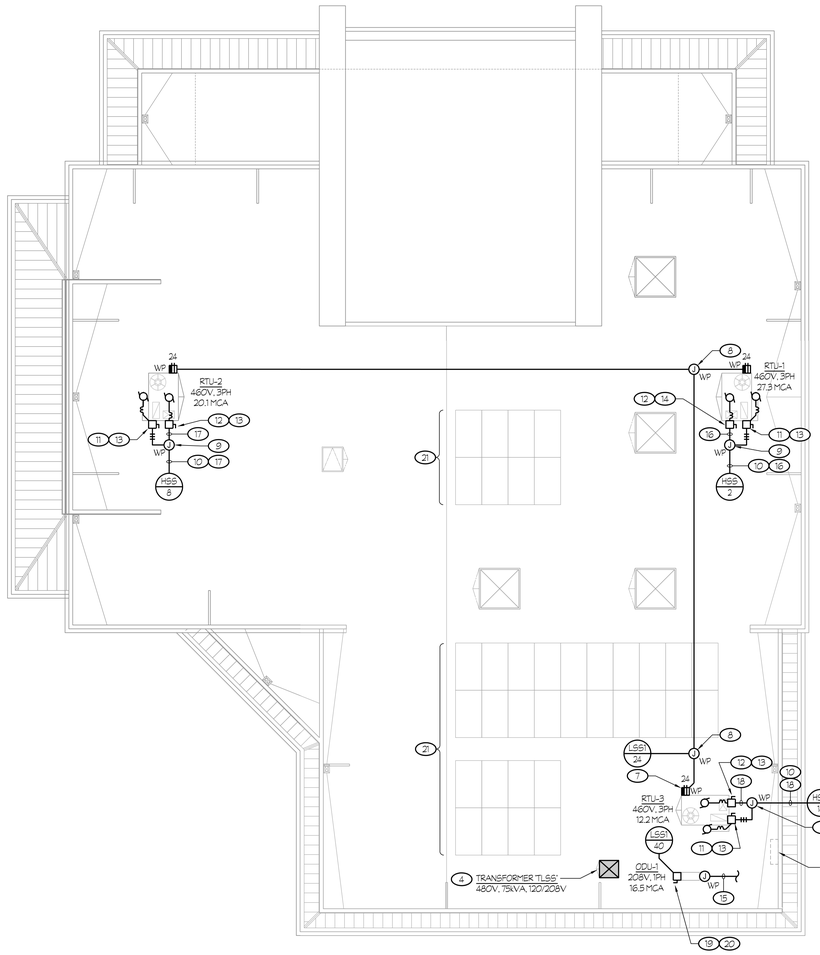

3 ROOF ELECTRICAL PLAN
STUDENT SERVICES

SCALE: 1/8" = 1'-0"

ROOM LEGEND					
#	ROOM NAME	#	ROOM NAME	#	ROOM NAME
101	LOBBY	118	OFFICE	135	BOOK STORAGE
102	RECEPTION	119	WAITING AREA	136	CAMPUS POLICE
103	ADMIN.	120	WAITING AREA	137	TOILET ROOM
104	ADMIN.	121	OFFICE	138	HALL
105	HALL	122	OFFICE	139	OFFICE
106	NURSE	123	OFFICE	140	OFFICE
107	TOILET ROOM	124	OFFICE	141	FIRE SPRINKLER RISER
108	TOILET ROOM	125	OFFICE	142	STAFF LOUNGE
109	WORKING ROOM	126	OFFICE	143	HALL
110	ARCHIVE STORAGE	127	DIRECTOR	144	JANITOR
111	PAPER STORAGE	128	HALL	145	TOILET ROOM
112	OFFICE	129	CONFERENCE	146	ELECTRICAL ROOM
113	OFFICE	130	CONFERENCE	147	
114	OFFICE	131	HALL	148	
115	OFFICE	132	DIRECTOR	149	WATER HEATER STORAGE
116	OFFICE	133	HALL		
117	OFFICE	134	MAIL PICK-UP		

NOTES (THIS SHEET ONLY):

1. ROUTE CIRCUIT THROUGH RECEPTACLE RELAY PACK. SEE SHEET #E3.10 FOR POWER RELAY PACK LOCATION.
2. REFER TO DETAIL #3/E7.01, FOR MOUNTING IN FIRE RATED WALL.
3. REFER TO DETAIL #10/E7.01, FOR FLUSH MOUNTING REQUIREMENTS.
4. REFER TO DETAIL #11/E7.01, FOR TRANSFORMER MOUNTING REQUIREMENTS.
5. REFER TO DETAIL #1/E7.02, FOR MAIN SWITCHBOARD 'MSB' MOUNTING REQUIREMENTS.
6. MOUNT JUNCTION BOX IN ACCESSIBLE ATTIC SPACE ABOVE T-BAR CEILING. TYPICAL.
7. PROVIDE G.F.C.I. DUPLEX RECEPTACLE INSIDE A WEATHERPROOF OUTLET BOX WITH LOCKABLE WEATHERPROOF 'WHILE-IN-USE' COVER (RED-DOT #CKSUV, OR EQUAL) AND MOUNT ONTO H.V.A.C. UNIT. COORDINATE EXACT LOCATION WITH MECHANICAL CONTRACTOR PRIOR TO ROUGH-IN. TYPICAL OF 4.
8. MOUNT JUNCTION BOX IN ACCESSIBLE ATTIC SPACE BELOW. TYPICAL, U.O.N..
9. PROVIDE A NEW N3R SCREW COVER CAN (8'SQ. x 4'DP.) AND LOCATE WHERE THE BRANCH CIRCUIT ROUTE UP THRU THE ROOF.
10. TYPICAL AT ALL H.V.A.C. EQUIPMENT:
    ROUTE BRANCH CIRCUITING UP THRU OPENING OF ROOF CURB AND THEN THRU UNIT TO DISCONNECT SWITCH. PROVIDE LIQUID TIGHT FLEXIBLE METALLIC CONDUIT INSIDE UNIT FOR ROUTING OF CONDUCTORS.
11. PROVIDE ENGRAVED NAMEPLATE: 'ECONOMIZER DISCONNECT.'
12. PROVIDE ENGRAVED NAMEPLATE: 'RTU DISCONNECT'.
13. PROVIDE A 30A, 480V, 3-POLE, HEAVY RATED FUSED DISCONNECT SWITCH AND MOUNT ONTO H.V.A.C. UNIT. PROVIDE FUSES PER MANUFACTURE RECOMMENDATIONS. COORDINATE EXACT LOCATION WITH MECHANICAL CONTRACTOR PRIOR TO ROUGH-IN.
14. PROVIDE A 60A, 480V, 3-POLE, HEAVY RATED FUSED DISCONNECT SWITCH AND MOUNT ONTO H.V.A.C. UNIT. PROVIDE FUSES PER MANUFACTURE RECOMMENDATIONS. COORDINATE EXACT LOCATION WITH MECHANICAL CONTRACTOR PRIOR TO ROUGH-IN.
15. 3/4"C TO ELECTRICAL ROOM INDOOR UNIT, IDU-1. CABLES PROVIDED BY MECHANICAL CONTRACTOR. REFER TO ENLARGED PARTIAL POWER PLAN, DETAIL #1/E2.10, FOR INDOOR UNIT LOCATION AND KEYNOTE #22 FOR CONTINUATION OF CONDUIT.
16. 1"C - 3 #8 + 1 #10 GND.
17. 3/4"C - 3 #10 + 1 #10 GND.
18. 3/4"C - 3 #12 + 1 #12 GND.
19. PROVIDE ENGRAVED NAMEPLATE 'ODU DISCONNECT'.
20. PROVIDE A 30A, 240V, 2-POLE, HEAVY RATED FUSED DISCONNECT SWITCH AND MOUNT ONTO H.V.A.C. UNIT. PROVIDE FUSES PER MANUFACTURE RECOMMENDATIONS. COORDINATE EXACT LOCATION WITH MECHANICAL CONTRACTOR PRIOR TO ROUGH-IN.
21. REFER TO SHEET #E2.20 FOR SOLAR PV REQUIREMENTS.
22. 3/4"C TO ROOF TOP OUTDOOR UNIT, ODU-1. CABLES PROVIDED BY MECHANICAL CONTRACTOR. REFER TO ROOF ELECTRICAL PLAN, DETAIL #3/E2.10, FOR OUTDOOR UNIT LOCATION AND KEYNOTE #15 FOR CONTINUATION OF CONDUIT.
23. PROVIDE A MOTOR RATED NON-FUSED DISCONNECT SWITCH AND CONNECT TO MECHANICAL EQUIPMENT AS REQUIRED.
24. ROUTE 120V POWER THROUGH FIRE ALARM RELAY MODULE FOR CONTROL OF FIRE SMOKE / DAMPERS.

GENERAL NOTE:

1. REFER TO DETAIL #12/E7.01 FOR CONDUIT SUPPORT DETAILS.
2. VERIFY EXACT LOCATION AND REQUIREMENTS OF ALL HVAC EQUIMENT WITH MECHANICAL CONTRACTOR PRIOR TO ROUGH-IN. CONDUIT AND WIRING FOR CONTROLS, BOTH LINE AND LOW VOLTAGE, SHALL BE BY MECHANICAL CONTRACTOR.
3. REFER TO DETAIL #13/E7.01, FOR RECEPTACLES MOUNTED IN 1-HR RATED WALLS. TYPICAL, U.O.N..
4. SEAL CONDUITS THROUGH FIRE RATED WALLS WITH FIREPROOF MATERIAL. REFER TO DETAIL #10/E7.03 FOR REQUIREMENTS.

WALL LEGEND

- 8 INCH CMU WALL
- 6 INCH 1 HOUR RATING FIRE WALL
- 6 INCH 2 HOUR RATING FIRE WALL
- 6 INCH WOOD STUDS WALL

Rose Sing Eastham & Associates
Electrical Consultants
131 S. Dunworth – (559)733-2671
Visalia, California 93292-6705

REGISTERED PROFESSIONAL ENGINEER — ERIC K. KIRK — No. E-18786 Exp. 6/30/27 — ELECTRICAL — STATE OF CALIFORNIA

IDENTIFICATION STAMP
DIV. OF THE STATE ARCHITECT
APP: 02-123307 INC:
REVIEWED FOR
SS ☑ FLS ☑ ACS ☑
DATE: 10/15/2025

Owner:
WASHINGTON UNIFIED SCHOOL DISTRICT

WASHINGTON UNIFIED SCHOOL DISTRICT
6041 SOUTH ELM AVE.
FRESNO, CA 93706

Project Name:
STUDENT SERVICES

Project Address:
WASHINGTON UNION HIGH SCHOOL
6041 SOUTH ELM AVE,
Fresno, CA 93706

integrated designs
by SOMAM, Inc.

ARCHITECTURE
ENGINEERING
INTERIOR DESIGN

6011 N. FRESNO STREET, SUITE 130
FRESNO CALIFORNIA 93710
P:(559) 436-0881 F:(559) 436-0887
E: design@somam.com
integrateddesigns.com

Ownership of Documents
This document, the ideas and designs incorporated herein, as an instrument of Professional Service is the property of Integrated Designs by SOMAM Inc. and is not to be used, in whole or in part for any other project without written authorization.
© COPYRIGHT 2020

Stamp:

Sheet Title:
POWER PLAN AND ROOF ELECT. PLAN

Job No.: **5613**

Sheet No.: **E2.10**

Release: DSA — Issue Date: 04-23-25

Z:\Drafting\Jobs\RSES\5XXX\5613\Revit\Washington High School 5613 Washington Union HS - Student Services Bldg\23.10.rvt PRINTED: 09/19/25 BY: Kevin DATE PLOTTED: 09/19/25 JOB # 25-088-SE

DC SCHEDULE AND CALCULATIONS

DESIGN TEMPERATURE BASED OFF OF -5°C LOW SITE TEMPERATURE, Voc (%/°C) = -0.27

	CIRCUIT ID	# OF MODULES IN STRING	Voc	Vmp	Isc	Imp	kW @ STC	MIN FUSE SIZE	WIRE QTY & SIZE	WIRE AMPACITY AFTER DERATE	WIRE MATERIAL	WIRE INSULATION	MAX ONE-WAY DISTANCE
	PV MODULE	N/A	51.0	38.37	11.36	10.82	0.415	N/A	MFR. DATASHEET	N/A	MFR. DATASHEET	MFR. DATASHEET	N/A
ARRAY #1	STR-1	8	408.0	307.0	11.36	10.82	3.32	20	2 #10 + 1 #10 GND.	32	CU	PV WIRE	100
ARRAY #3	STR-2	8	408.0	307.0	11.36	10.82	3.32	20	2 #10 + 1 #10 GND.	32	CU	PV WIRE	100
ARRAY #2	STR-3	10	510.0	383.7	11.36	10.82	4.15	20	2 #10 + 1 #10 GND.	28	CU	PV WIRE	100
	STR-4	10	510.0	383.7	11.36	10.82	4.15	20	2 #10 + 1 #10 GND.	28	CU	PV WIRE	100

INVERTER CONFIGURATION

INVERTER ID	INVERTER ARRAYS	INVERTER MAKE & MODEL	INVERTER OCP	INVERTER kW	INVERTER kVA	STRINGS	MODULES PER INVERTER	kW DC PER INVERTER
INV-A	#1 & #2	EG4 18kPV HYBRID INVERTER	50/3P	10.4	10.4	STR-1 TO STR-4	36	14.94

CA ENERGY CODE MINIMUMS (SECTION 140.10)

PER BUILDING ENERGY EFFICIENCY STANDARDS
EQUATION 140.10-A: kW(PVdc) = (CFA x A)/1000
EQUATION 140.10-B: kWh(batt) = kW (PVdc) x B / (D ^ 0.5)
EQUATION 140.10-C: kW(batt) = kW(PVdc) x C

A = 1.63 (PER TABLE 140.10-A)
B = 1.87, C = 0.46 (PER TABLE 140.10-B)
D = 0.969 (CEC EFFICIENCY)

ENERGY CODE REQUIREMENTS

	ENERGY CODE MINIMUMS	DESIGN
PV SIZE	14.5 kW	14.94 kW
BATTERY ENERGY CAPACITY	27.6 kWh	28.6 kWh
BATTERY POWER CAPACITY	6.7 kW	12 kW

SYSTEM SUMMARY

PROJECT LOCATION	6041 SOUTH ELM AVE., FRESNO, CA 93706
MIN DESIGN TEMPERATURE	-5°C
MAX DESIGN TEMPERATURE	65°C
PV MODULE & COUNT	(36) Q CELLS Q. PEAK DUO ML-G10+
PV MODULE WATTAGE @ STC	415 W
PV DC SYSTEM SIZE	14.94 kW
PV INVERTER TYPE & COUNT	(1) EG4 18kPV HYBRID INVERTER
BESS TYPE & COUNT	(2) EG4 POWERPRO WALLMOUNT ALL WEATHER BATTERIES (PP-16.28OAI-1BKI-AWLL)

PV SYSTEM - TEMPERATURE CORRECTION CALCS

PANEL
ISC = 11.26A PER PANEL
VOC = 45.16V PER PANEL

LOWEST AMBIENT TEMP = -5°C
CORRECTED VOC = 51.0 V
MAX VOC W/ 11 PER STRING @ -5°C = 561 VDC
CORRECTED ISC @ 65°C = 11.36 A (PER STRING)
MAX ISC (MPPT1) = 1.25 *ISC * 2 STRINGS = 28.4A (@DC VOLTAGE)
MAX ISC (MPPT2) = 1.25 *ISC * 1 STRING = 14.2A (@DC VOLTAGE)
MAX ISC (INV) = ISC* 4 INPUTS = 56.8A

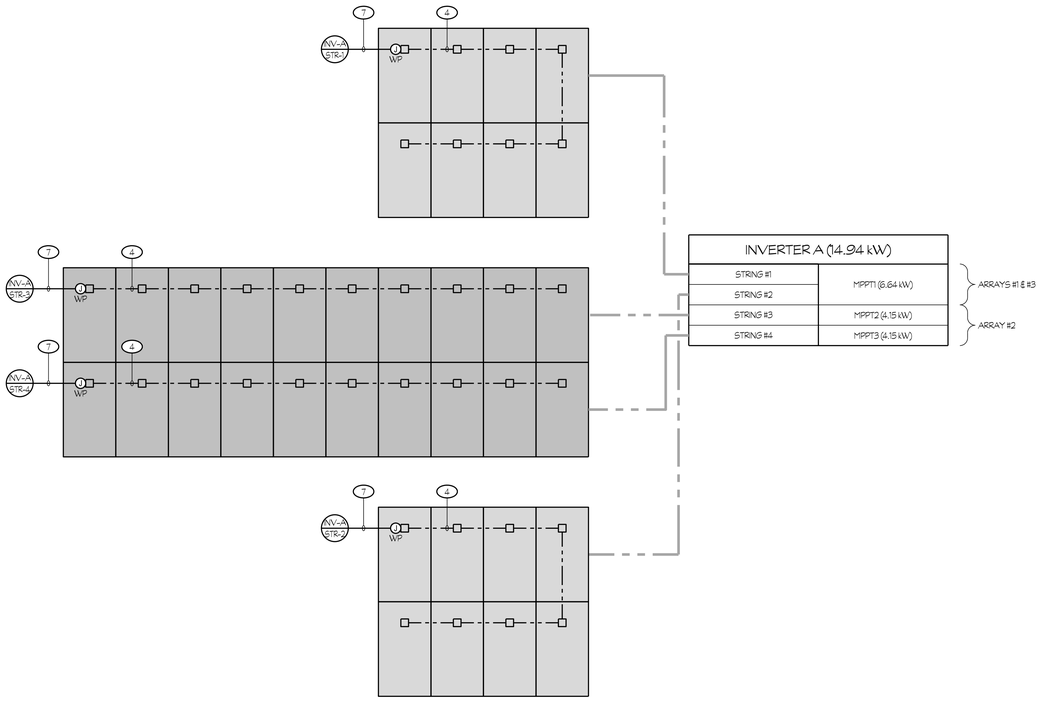

1 PV ELECTRICAL PLAN

NTS

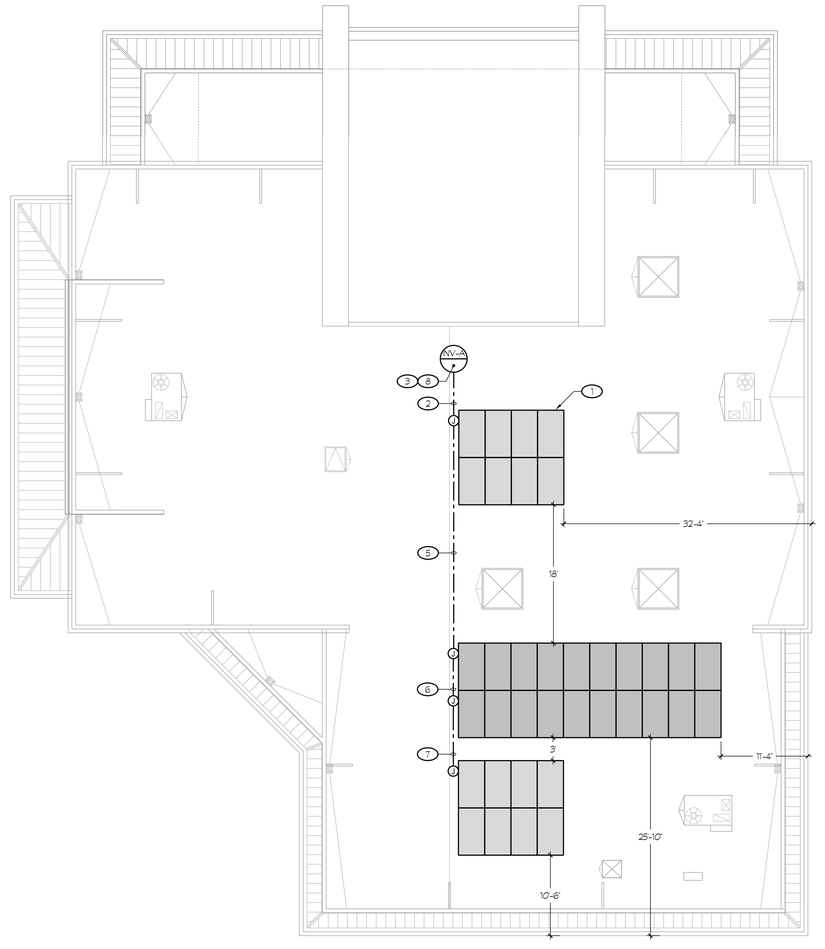

ROOF SOLAR PLAN

STUDENT SERVICES

SCALE: 1/8" = 1'-0"

GENERAL NOTE:

1. MAINTAIN, AT MINIMUM, A 4-FT WIDE CLEAR PERIMETER AROUND THE EDGES OF THE ROOF.
2. MAINTAIN, AT MINIMUM, A 4-FT WIDE CLEAR PATHWAY IN A STRAIGHT LINE TO ROOF STAND PIPES OR VENTILATION HATCHES.
3. MAINTAIN, AT MINIMUM, A 4-FT WIDE CLEAR PATHWAY AROUND ROOF ACCESS HATCHES, WITH AT LEAST ONE PATHWAY TO A PARAPET OR ROOF EDGE

NOTES (THIS SHEET ONLY):

1. 415W SOLAR PV MODULE. TYPICAL OF 36. REFER TO NEW ONE LINE DIAGRAM ON SHEET #E6.02 AND DETAIL #1/E2.23, FOR ADDITIONAL REQUIREMENTS.
2. 1'C - 8 #10 + 1 #10 EG + 1 #8 CU BARE, ROUTED IN CEILING SPACE BELOW ROOF.
3. PROVIDE DC CIRCUITS TO INVERTER "INV-A". SEE PARTIAL SITE ELECTRICAL PLAN, SHEET E1.13, FOR SOLAR EQUIPMENT LOCATIONS.
4. PV CABLE WITH MC4 CONNECTOR MOUNTED TO UNDERSIDE OF PV MODULE. TYPICAL FOR PV MODULE INTERCONNECTIONS.
5. 3/4"C - 6 #10 + 1 #10 EG + 1 #8 CU BARE, ROUTED IN CEILING SPACE BELOW ROOF.
6. 3/4"C - 4 #10 + 1 #10 EG + 1 #8 CU BARE, ROUTED IN CEILING SPACE BELOW ROOF.
7. 3/4"C - 2 #10 + 1 #10 EG + 1 #8 CU BARE, ROUTED IN CEILING SPACE BELOW ROOF.
8. ROUTE STRINGS THROUGH RSS TRANSMITTER. SEE ONE LINE DIAGRAM DETAIL #2/E6.02 FOR ADDITIONAL INFORMATION.

Rose Sing Eastham & Associates
Electrical Consultants
131 S. Dunworth – (559)733-2671
Visalia, California 93292-6705

DAVID KIRK STEVENS — No. E-18786 Exp. 6/30/27 — ELECTRICAL — STATE OF CALIFORNIA — PROFESSIONAL ENGINEER

IDENTIFICATION STAMP
DIV. OF THE STATE ARCHITECT
APP: 02-123307 INC:
REVIEWED FOR
SS ☑ FLS ☑ ACS ☑
DATE: 10/15/2025

Owner:
WASHINGTON UNIFIED SCHOOL DISTRICT

WASHINGTON UNIFIED SCHOOL DISTRICT
6041 SOUTH ELM AVE.
FRESNO, CA 93706

Project Name:
STUDENT SERVICES

Project Address:
WASHINGTON UNION HIGH SCHOOL
6041 SOUTH ELM AVE,
Fresno, CA 93706

integrated designs
by SOMAM, Inc.

ARCHITECTURE
ENGINEERING
INTERIOR DESIGN

6011 N. FRESNO STREET, SUITE 130
FRESNO CALIFORNIA 93710
P:(559) 436-0881 F:(559) 436-0887
E: design@somam.com
integrateddesigns.com

Ownership of Documents
This document, the ideas and designs incorporated herein, as an instrument of Professional Service is the property of Integrated Designs by SOMAM Inc. and is not to be used, in whole or in part for any other project without written authorization.
© COPYRIGHT 2020

Stamp:

Sheet Title:
ROOF SOLAR PLANS

Job No.: **5613**

Sheet No.: E2.20

Release: DSA Issue Date: 04-23-25

Z:\Drafting\Jobs\PDF\5XXX\5613\Plans\Washington High School\5613 Washington Union HS - Student Services Bldg\E2.20.dwg [DATE: 5/4/23, 09/19/25 Bh: Private [DATE: PLOTTED: 09/19/25 ASB #: 25-108-SE

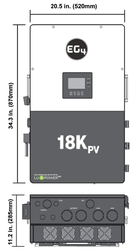

EG4® 18kPV HYBRID INVERTER

The EG4 18kPV is a 48V split-phase, hybrid inverter/charger capable of utilizing 18kW of PV and efficiently outputting 12kW of power while charging the battery bank. Parallel up to 10 units for 120kWs of AC power. Control multiple stations and units using the new EG4 monitoring software.

AC COUPLING CAPABILITY | REMOTE ADJUSTMENT VIA EG4 SOFTWARE | 10-YEAR WARRANTY

ALL-IN-ONE HYBRID INVERTER
Capable of running entirely off the grid, using grid assist, or selling power back to the grid.

UP TO 600VDC INPUT
The extra high voltage enables lower cable sizing for the 3 MPPTs with a recommended maximum PV input of 21kW, eliminating the need for a combiner box.

MOUNTABLE WI-FI DEVICE
Enables wireless connection between our new monitoring platform and the 18kPV through the EG4 app or EG4 Monitor system.

CLOSED-LOOP COMMUNICATIONS
Able to communicate with EG4 48V batteries and other battery brands. A battery firmware update is required for closed-loop communications with LifePower4 batteries.

HIGH FREQUENCY, SPLIT-PHASE OUTPUT
Allows for 120/240V single unit or 120/208 service operation.

©2024 EG4 ELECTRONICS, LLC. ALL RIGHTS RESERVED.
VERSION 1.3.5 | INFORMATION SUBJECT TO CHANGE WITHOUT NOTICE.
MODEL #: 18KPV-12LV

EG4 ELECTRONICS

TECHNICAL SPECIFICATIONS

AC INPUT DATA	
NOMINAL AC VOLTAGE	120/240VAC; 120/208VAC (L1/L2/N required)
FREQUENCY	50/60Hz
MAX. AC CURRENT	50A @ 240VAC
MAX. AC INPUT POWER	12000W
MAX. AC BYPASS	200A
AC GRID OUTPUT DATA	
MAX. OUTPUT CURRENT	50A
OUTPUT VOLTAGE	120/240VAC; 120/208VAC (L1/L2/N required)
OPERATING VOLTAGE RANGE	180-270VAC
NOMINAL POWER OUTPUT	@240V 12000W | @208V 10400W
FREQUENCY	50/60Hz
POWER FACTOR	0.99 @ Full Load
REACTIVE POWER ADJUST RANGE	(-0.8) ~ (+0.8) Leading Adjustable
MAX CONT. LINE WATTAGE	6000W
PEAK POWER (SURGE CAPACITY)	w/ PV: 14700W (10 min), 15500W (5 min) W/O PV: 13500W (10 min)
THD @FULL LOAD	<5%
TRANSFER TIME	20ms (Default), 10ms (Configurable) | Parallel – 20ms
BACKUP/UPS AC OUTPUT DATA	
RATED OUTPUT CURRENT (240/208VAC)	50A
AC BYPASS (GENERATOR)	90A
NOMINAL OUTPUT VOLTAGE	240 | 120/240 | 120/208VAC
RATED OUTPUT POWER	@240VAC 12000W | @208VAC 10400W
MAX. CONTINOUS LINE WATTAGE	8000W per 120V
PEAK POWER	w/ PV: 14700W (10 min), 15500W (5 min) w/o PV: 13500W (10 min)
THDV (TOTAL HARMONIC DISTORTION VOLTAGE)	<5%
SWITCHING TIME	10ms
PV INPUT DATA	
NUMBER OF MPPTS	3
INPUTS PER MPPT	2 (MPPT 1) | 1 (MPPT 2) | 1 (MPPT 3)
MAX. USABLE INPUT CURRENT	25A (MPPT 1) | 15A (MPPT 2) | 15A (MPPT 3)
MAX. SHORT CIRCUIT INPUT CURRENT	31A (MPPT 1) | 19A (MPPT 2) | 19A (MPPT 3)
DC INPUT VOLTAGE RANGE	100-600 VDC
UNIT STARTUP VOLTAGE	100 VDC
MPPT OPERATING VOLTAGE RANGE	140-500 VDC
NOMINAL MPPT VOLTAGE	360 VDC
MAXIMUM UTILIZED SOLAR POWER	18000W
RECOMMENDED MAXIMUM SOLAR INPUT	21000W

EG4 ELECTRONICS

EFFICIENCY	
CEC	96.9%
MAXIMUM EFFICIENCY (PV TO GRID)	97.5%
MAXIMUM EFFICIENCY (BATTERY TO GRID)	94%
MAXIMUM EFFICIENCY (PV TO BATTERY)	99.9%
IDLE CONSUMPTION (NORMAL | STANDBY MODE)	~70W | ~18W
BATTERY DATA	
COMPATIBLE BATTERY TYPES	Lead-acid/Lithium
MAX. CHARGE/DISCHARGE CURRENT	250A
NOMINAL VOLTAGE	48 VDC
VOLTAGE RANGE	40-60 VDC (Lithium); 40-60 VDC (Lead-acid)
RECOMMENDED BATTERY CAPACITY PER INVERTER	>200Ah
GENERAL DATA	
MAX. UNITS IN PARALLEL	10
PRODUCT DIMENSIONS (H×W×D)	34.3×20.5×11.2 in (870×520×285mm)
UNIT WEIGHT	121 lbs. (55kg)
DESIGN TOPOLOGY	High Frequency - Transformerless
RELATIVE HUMIDITY	0-100%
OPERATING ALTITUDE	<2000m (<6561ft)
OPERATING AMBIENT TEMPERATURE RANGE	-13°F – 140°F (-25°C – 60°C)
STORAGE AMBIENT TEMPERATURE RANGE	-13°F – 140°F (-25°C – 60°C)
NOISE EMISSION (TYPICAL)	68dB @ 3ft
COMMUNICATION INTERFACE	RS485/Wi-Fi/CAN
STANDARD WARRANTY*	10-year standard warranty
OUTDOOR RATING	NEMA 4X
SAFETY FEATURES	PV Arc Fault Protection, PV Ground Fault Protection, PV Reverse Polarity Protection, Pole Sensitive Leakage Current Monitoring Unit, Surge Protection Device, Integrated PV Disconnect
STANDARDS AND CERTIFICATIONS	
UL1741, SA, SB	
RAPID SHUT DOWN (RSD) NEC 2020:690.12	
ARC-FAULT CIRCUIT INTERRUPTER (AFCI) NEC 2020:690.11 / UL1699B	
GROUND FAULT MONITORING (GFDI) NEC 2020:690.41(B)	
CSA 22.2.107.1	
CSA 22.2.330	
IEEE 1547.1:2020; IEEE 1547:2018	
HAWAII RULE 14H	
CALIFORNIA RULE 21 PHASE I, II, III	
FCC PART 15, CLASS B	

See EG4 Warranty Registration for terms and conditions

1 PHOTOVOLTAIC INVERTERS

NTS



WALLMOUNT ALL WEATHER LITHIUM BATTERY

The EG4® WallMount All Weather 280Ah batteries are ideal for low-voltage residential outdoor energy storage system (ESS) applications. The batteries use lithium iron phosphate cells with the highest safety performance and an intelligent Battery Management System (BMS) that can monitor and record the voltage of each cell along with the current, voltage, and temperature of the module in real-time. The BMS also contains a passive balance function and an advanced battery control method, both of which improve the performance and longevity of the battery pack.

BUILT-IN 200A BMS | INTEGRATED 600A BUSBARS | 82.6MWh LIFETIME PRODUCTION* | *10 YEAR WARRANTY >8000 CYCLES @ 80% DOD

ON-BOARD LCD TOUCH SCREEN
Easy to see BMS monitoring, and selectable closed-loop communications with EG4, Schneider, Sol-Ark, Victron, Growatt, Megarevo, Luxpower, and Deye inverters.

DUAL ON-BOARD FIRE ARRESTORS
Offer fail-safe protection against thermal runaway.

WEATHER-TIGHT QUICK CONNECTS
Included battery cables with outdoor rated connectors allowing for fast, safe, and reliable battery connections.

INTEGRATED SELF-HEATING FEATURE
Heats the battery when the ambient temperature is low. A key feature for outdoor Lithium battery cell operations.

INTEGRATED BUSBARS
The battery design comes manufactured with 600A internal busbars with multiple terminals (4 positive & 4 negative) eliminating the need for external busbars when paralleling batteries and/or multiple inverters.

INNOVATIVE EMERGENCY STOP FUNCTION
The optional ESS disconnect can shut down all batteries and inverters (if equipped with rapid shut down capability) with the press of a button.

THE PERFECT PARTNER TO THE EG4 18KPV
The optional conduit box mates up directly to the connection ports of the inverter allowing a sleek and efficient installation. For other inverters or stand-alone battery installation, the conduit box plugs should be installed.

©2025, EG4® ELECTRONICS, LLC. ALL RIGHTS RESERVED.
VER. 1.1.6 | INFORMATION SUBJECT TO CHANGE WITHOUT NOTICE.
MODEL #: WP-16/280-1AWLL | WP-16/280-1-AWLL

*For information regarding warranty registration on EG4® Electronics products, please navigate to https://eg4electronics.com/warranty/ and select the corresponding product to begin the registration process.

EG4 ELECTRONICS

SPECIFICATION SHEET

MODULE OPERATING PARAMETERS		
Parameter	**BMS**	**Recommended Charger Settings**
Total Energy Capacity	14.3kWh @25C, 100% SOC	-
Voltage	51.2V	-
Capacity	280Ah ±2%	@25°C ±2°C @ 0.5C
Charging Voltage (Bulk/Absorb)	56.0V (±0.8V)	56.2V (±0.2V)
Float	-	54V (±0.2V)
SOC Cutoff	-	20%*
Charge Current	200A Max. Continuous	60 - 140A
Discharge Current	200A Max. Continuous	160A

BMS PARAMETERS			
Charge	**Spec**	**Delay**	**Recovery**
Cell Voltage Protection	3.8V	1 sec	3.45V
Module Voltage Protection	60V	1 sec	55.2V
Charge Over-Current 1	>205A	10 sec	-
Charge Over-Current 2	>225A	3 sec	-
Temperature Protection	<23°F or >158°F <-5°C or >70°C	1 sec	>32°F or <140°F >0°C or <60°C
Discharge	**Spec**	**Delay**	**Recovery**
Cell Voltage Protection	2.3V	1 sec	3.1V
Module Voltage Protection	44.8V	1 sec	48V
Discharge Over-Current 1	>205A	10 sec	60 sec
Discharge Over-Current 2	>300A	3 sec	60 sec
Short Circuit	2000A	0.1 ms	-
Temperature Protection	<-4°F or >167°F <-20°C or >75°C	1 sec	>14°F or <149°F (>-10°C or <65°C)
PCB Temperature Protection	>230°F (>110°C)	1 sec	@ <176°F (<80°C)

GENERAL SPECIFICATIONS			
Parameter	**Spec**		**Condition**
Cell Balance	120mA	Passive Balance	Cell Voltage Difference >40mV
Temperature Accuracy	3%	Cycle Measurement	Measure Range: -40°F – >212°F (-40°C – >100°C)
Voltage Accuracy	0.5%	Cycle Measurement	Cells & Module
Current Accuracy	3%	Cycle Measurement	Measure Range: -200 – 200A
SOC	5%		Integral Calculation
Power Consumption (Standby)	<300uA		Standby/Storage
Power Consumption (Operating)	<25mA		Charging/Discharging
Communication Ports	RS485/CAN		Customizable

EG4 ELECTRONICS

BATTERY HEATER SPECIFICATIONS		
Parameter	**Spec**	**Condition**
Voltage	56V	-
Power Consumption	224W	-
Internal Battery Temperature	≤32°F (0°C) or ≥41°F (5°C)	Heat On/Heat Off
ENVIRONMENTAL PARAMETERS		
Charging Range	32°F to =113°F (0°C to =45°C)	
Discharging Range	-4°F to =122°F (-20°C to =50°C)	
Storage Range	-4°F to =122°F (-20°C to =50°C)	
Ingress Protection	IP65	
Operating Altitude	<6561.68 ft. (<2000m)	
PHYSICAL SPECIFICATIONS		
Dimensions (H × W × D)	34.6 × 22.3 × 9.1 in. (88 × 56.6 × 23.2cm)	
Weight	308.6 lbs. (140 kg)	
Design Life	>15 years	
Cycle Life	>8000 Cycles @ 0.5C 80% DOD	
Lifetime Production	82.6MWh*	
SAFETY CERTIFICATIONS		
Certifications	UL1973, UL9540A (Passed)	

*EG4 recommends this value be set no lower than 20% to maintain the recommended 80% depth of discharge.

**(51.2V×280Ah/1000×80%×8000 cycles/1000)90%=MWh

2 BATTERY ENERGY STORAGE SYSTEM

NTS



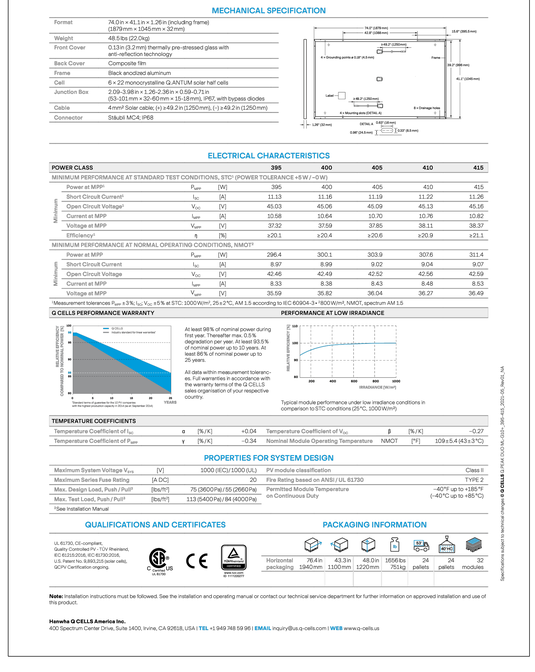

3 PHOTOVOLTAIC MODULE

NTS

Rose Sing Eastham & Associates
Electrical Consultants
131 S. Dunworth – (559)733-2671
Visalia, California 93292-6705



IDENTIFICATION STAMP
DIV. OF THE STATE ARCHITECT
APP: 02-123307 INC:
REVIEWED FOR
SS ☑ FLS ☑ ACS ☑
DATE: 10/15/2025

Owner:
WASHINGTON UNIFIED SCHOOL DISTRICT

WASHINGTON UNIFIED SCHOOL DISTRICT
6041 SOUTH ELM AVE.
FRESNO, CA 93706

Project Name:
STUDENT SERVICES

Project Address:
WASHINGTON UNION HIGH SCHOOL
6041 SOUTH ELM AVE,
Fresno, CA 93706

integrated designs
by SOMAM, Inc.

ARCHITECTURE ENGINEERING INTERIOR DESIGN

6011 N. FRESNO STREET, SUITE 130
FRESNO CALIFORNIA 93710
P:(559) 436-0881 F:(559) 436-0887
E: design@somam.com
integrateddesigns.com

Ownership of Documents
This document, the ideas and designs incorporated herein, as an instrument of Professional Service is the property of Integrated Designs by SOMAM Inc. and is not to be used, in whole or in part for any other project without written authorization.
© COPYRIGHT 2020

Stamp:

Sheet Title:
SOLAR CUTSHEETS

Job No.:
5613

Sheet No.:
E2.21

Release: DSA Issue Date: 04-23-25

1" = 30'-0" 1/4" = 1'-0" 1" = 20'-0" 1/8" = 1'-0" 1" = 40'-0" 1" = 50'-0"

Z:\Drafting\Jobs\WCUSD\03\Revit\Washington High School\5613 Washington Union HS - Student Services Bldg\22.21.dwg DATE: 5/4/23, 02/21/25 BY: Phoebe DATE PLOTTED: 09/19/25 4:08 P JOB-NBR-SE

PHOTOVOLTAIC SOLAR SYSTEMS - GENERAL NOTES

1. THESE DRAWINGS HAVE BEEN PREPARED WITH INFORMATION PROVIDED IN ORIGINAL DESIGN DOCUMENTS AND HAVE NOT BEEN VERIFIED FOR ACCURACY. NEW DESIGN AND REQUIREMENTS WERE BASED ON THE ASSUMPTION OF EXISTING INFORMATION BEING ACCURATE. ANY DISCREPANCIES OR QUESTIONABLE POINTS SHALL BE IMMEDIATELY REPORTED TO THE ENGINEER.

2. ALL ELECTRICAL MATERIALS AND EQUIPMENT SHALL BE NEW AND SHALL BE LISTED BY UNDERWRITER'S LABORATORIES (UL) AND BEAR THEIR LABEL, OR LISTED AND CERTIFIED BY A NATIONALLY RECOGNIZED TESTING AUTHORITY. ALL LIKE EQUIPMENT, MATERIAL, FIXTURES, ETC. SHALL BE OF SAME MANUFACTURER AT ALL TIMES - NO EXCEPTIONS. CUSTOM MADE EQUIPMENT SHALL HAVE COMPLETE TEST DATA SUBMITTED BY THE MANUFACTURER ATTESTING TO ITS SAFETY. IN ADDITION, THE MATERIALS, EQUIPMENT AND INSTALLATION SHALL COMPLY WITH THE REQUIREMENTS, STANDARDS, RULES, AND REGULATIONS OF THE FOLLOWING AND BE MOST SUITABLE TO THE PURPOSE INTENDED:

   AMERICAN SOCIETY OF TESTING MATERIALS (ASTM)
   INSULATED POWER CABLE MANUFACTURERS ASSOCIATION (IPCMA)
   NATIONAL ELECTRICAL MANUFACTURERS ASSOCIATION (NEMA)
   AMERICAN STANDARD ASSOCIATION (ASA)
   NATIONAL FIRE PROTECTION AGENCY (NFPA)
   AMERICAN NATIONAL STANDARD INSTITUTE (ANSI)
   CALIFORNIA ELECTRICAL CODE (CEC), 2022 EDITION
   CALIFORNIA CODE OF REGULATIONS TITLE 24 (CCR)
   INSTITUTE OF ELECTRICAL AND ELECTRONIC ENGINEERS (IEEE)
   NATIONAL ELECTRICAL CODE (NEC), 2020 EDITION
   ELECTRONIC INDUSTRY ASSOCIATION (EIA)
   TELECOMMUNICATIONS INDUSTRY ASSOCIATION (TIA)

3. ELECTRICAL DOCUMENTS ARE DIAGRAMMATIC AND INDICATE THE GENERAL LAYOUT OF THE COMPLETE CONSTRUCTION WORK. DO NOT SCALE THE ELECTRICAL DRAWINGS FOR LOCATIONS OF ANY ELECTRICAL, ARCHITECTURAL, STRUCTURAL, CIVIL, OR MECHANICAL ITEMS OR FEATURES. DUE TO STRUCTURAL CONDITIONS, MECHANICAL DUCTING, OR PIPING REASONS, ELECTRICAL CONTRACTOR MAY DESIRE TO INSTALL THE WORK IN A MANNER DIFFERENT FROM THAT SHOWN. ROUTING OF RACEWAYS SHALL BE AT THE OPTION OF THE CONTRACTOR UNLESS OTHERWISE NOTED AND SHALL BE COORDINATED WITH OTHER SECTIONS.

4. ALL WIRING AND CABLING SHALL BE IN CONDUIT. ALL EXPOSED CONDUITS SHALL BE RIGID, GALVANIZED STEEL OR INTERMEDIATE METAL CONDUITS (IMC) OR ELECTRICAL METALLIC TUBING (EMT). ALL CONDUITS SHALL BE INSTALLED PARALLEL WITH, OR AT RIGHT ANGLES TO THE BUILDING LINES, BEAMS, OR CEILING. ALL LONG CONDUIT RUNS SHALL INCLUDE PULL BOXES AT 100-FOOT INCREMENTS AND SIZED AS REQUIRED OR NOTED. IN ADDITION, ALL CONDUITS CROSSING CEILING STRUCTURE EXPANSIONS SHALL HAVE APPROVED EXPANSION FITTINGS ACCORDINGLY. FLEXIBLE CONDUIT IS PERMITTED ONLY FOR SHORT LENGTHS TO EQUIPMENT TERMINATION AS REQUIRED (NOT TO EXCEED 5' IN LENGTH).

5. ALL CONDUCTORS SHALL BE COPPER. CONDUCTORS #10-AWG AND LARGER SHALL BE STRANDED TYPE WITH "THWN/THHN" INSULATION (75 DEGREES CELSIUS, WET OR DRY). ALUMINUM CONDUCTORS ARE NOT PERMITTED.

6. ALL FINAL CONNECTIONS TO AND INSTALLATION OF FURNISHED BY OTHERS EQUIPMENT SHALL BE MADE BY THE ELECTRICAL CONTRACTOR.

7. UTILITY PENETRATIONS OF ANY KIND IN FIRE AND SMOKE PARTITIONS AND CEILING ASSEMBLIES SHALL BE FIRE STOPPED AND SEALED WITH AN APPROVED MATERIAL SECURELY INSTALLED.

8. REFER TO SHEET #EG1.1, "SEISMIC ANCHORAGE REQUIREMENTS", FOR THE SEISMIC BRACING AND ANCHORAGE OF ELECTRICAL CONDUITS.

9. SOLAR PANELS AND SUPPORT SYSTEM TO BE GROUNDED PER CEC 250 AND 690.

10. INVERTER INCLUDES INTEGRAL DC DISCONNECT UNLESS OTHERWISE NOTED.

11. SECURELY FASTEN ALL ELECTRICAL EQUIPMENT BY MEANS OF RODS, HANGERS, SUPPORTS, GUIDES, ANCHORS AND SWAY BRACES TO MAINTAIN ALIGNMENT, TO PREVENT EQUIPMENT MOVEMENT, AND TO RESIST SEISMIC FORCES. DO NOT SECURE ANY ELECTRICAL EQUIPMENT TO ACOUSTICAL CEILING SUPPORT WIRES OR NON STRUCTURAL ELEMENTS.

12. STRAIGHT FEEDER, BRANCH CIRCUIT AND CONDUIT RUNS SHALL BE PROVIDED WITH SUFFICIENT PULL BOXES TO LIMIT THE MAXIMUM LENGTH OF ANY SINGLE CABLE PULL TO 100 FEET. PULL BOXES SHALL BE SIZED PER CODE OR AS INDICATED ON DRAWINGS. LOCATIONS SHALL BE DETERMINED IN THE FIELD OR AS INDICATED ON THE DRAWINGS.

13. FEEDERS:

13.A. CONDUITS FOR SOLAR SYSTEMS SHALL BE IDENTIFIED WITH STENCIL MARKINGS AT 100 FOOT INCREMENTS, AT EACH INTERSECTION, AND AT EACH CROSSOVER FROM ONE AREA TO ANOTHER, PENETRATION OF WALLS, AND FLOORS WITH LETTERING 3/4" MINIMUM FOR 1" CONDUIT OR LESS, 1" MINIMUM FOR 2" CONDUIT OR LESS, AND 1-1/2" MINIMUM FOR 4" OR LESS IN THE COLORS AS FOLLOWS:

   208/240 VOLTS: BLACK

   1000 VOLTS: RED

14. ALL CONDUCTORS AND CABLES SHALL BE IDENTIFIED AT EACH JUNCTION BOX, OUTLET BOX, CABINET, PULL BOX, ETC., WITH VINYL SELF-ADHESIVE TAPE SHOWING PANEL AND CIRCUIT NUMBERS, CONTROL WIRE NUMBER OR OTHER APPROPRIATE INFORMATION REGARDING THE SYSTEM IT REPRESENTS.

15. DRAWINGS DO NOT SHOW ALL OFFSETS, BENDS, SPECIFIC FITTINGS, JUNCTION BOXES NOR PULL BOXES NECESSARY TO MEET JOB CONDITIONS. THESE ITEMS SHALL BE PROVIDED WHERE NECESSARY.

16. ALL EXISTING EQUIPMENT, MATERIAL, CONDUCTORS AND CABLES THAT ARE NOT TO BE REUSED IN THEIR PRESENT LOCATIONS SHALL BE CAREFULLY DISCONNECTED (CONDUCTORS AND CABLES REMOVED TO SOURCE OF SUPPLY) AND STORED IN A SAFE PLACE. IT SHALL BE MADE AVAILABLE FOR INSPECTION BY THE OWNER WHO WILL DESIGNATE WHAT IS TO BE STORED BY THE OWNER AND WHAT IS TO BE REMOVED FROM THE PREMISES BY THE ELECTRICAL CONTRACTOR.

17. THE ALTERATION OF THE EXISTING BUILDING IS WORK OF A COMPLEX NATURE WHICH WILL REQUIRE PLANNING, CAREFUL PREPARATION AND EXECUTION, ATTENTION TO DETAIL AND CLOSE SUPERVISION BY THE ELECTRICAL CONTRACTOR. ELECTRICAL CONTRACTOR WILL BE REQUIRED TO DO THIS WORK IN FULL COOPERATION WITH THE OTHER CONSTRUCTION TRADES AND, SUBJECT TO SCHEDULING, ARRANGE TO MINIMIZE DISRUPTION OF THE NORMAL ACTIVITIES OF THE FACILITY. ELECTRICAL CONTRACTOR TO COORDINATE ALL ACTIVITIES WITH OWNER.

18. IN AREAS WHERE THERE ARE NO ALTERATIONS INDICATED, THE EXISTING FACILITIES SHALL REMAIN IN SERVICE. IN CASE OF DOUBT, ASSUME THAT THE EXISTING ELECTRICAL SERVICE IS TO REMAIN IN OPERATION THROUGHOUT THE CONSTRUCTION PERIOD.

19. INSTALLATION OF ALL ELECTRICAL EQUIPMENT SHALL BE CAREFULLY COORDINATED WITH EXISTING CONDITIONS TO AVOID POSSIBLE INTERFERENCE PROBLEMS.

20. OUTDOOR ELECTRICAL EQUIPMENT SHALL BE INSTALLED IN SUITABLE ENCLOSURES AND SHALL BE PROTECTED FROM ACCIDENTAL CONTACT BY UNAUTHORIZED PERSONNEL, OR BY VEHICULAR TRAFFIC, OR BY ACCIDENTAL SPILLAGE OR LEAKAGE FROM PIPING SYSTEMS.

21. REFER TO MANUFACTURERS MOUNTING INSTALLATION REQUIREMENTS FOR PROPER SUPPORT SPACING AND ATTACHMENTS PER CALIFORNIA BUILDING CODE. INSTALL AS REQUIRED.

22. EXACT LOCATION OF SOLAR SYSTEM TO BE FIELD VERIFIED AND INSTALLED AS REQUIRED BY MANUFACTURER AND APPLICABLE CALIFORNIA BUILDING CODE.

23. SOLAR CIRCUIT BREAKERS SHALL BE INSTALLED ON OPPOSITE ENDS OF THE BUS BAR FROM OTHER SOURCE FEEDS (i.e. MAIN CIRCUIT BREAKER).

24. ACCESS AND WORKING SPACE SHALL BE PROVIDED AND MAINTAINED ABOUT ALL ELECTRICAL EQUIPMENT TO PERMIT READY AND SAFE OPERATION AND MAINTENANCE OF SUCH EQUIPMENT. THERE SHALL BE A MINIMUM CLEAR SPACE OF 36" IN FRONT OF EQUIPMENT; THE WIDTH OF CLEAR SPACE SHALL BE 32" AND A HEIGHT OF 6-1/2 FEET FROM GRADE.

25. THE DESIGN OF SUPPORT FRAME SYSTEM SHALL BE BASED ON CALCULATIONS OR ON TESTING IN COMPLIANCE WITH ICC-ES AC428 "ACCEPTANCE CRITERIA FOR MODULAR FRAMING SYSTEM USED TO SUPPORT PHOTOVOLTAIC (PV) MODULES," OR EQUAL, PER IR A-5.

26. SOLAR PANEL SYSTEM REQUIREMENTS

   a. SOLAR PANELS SHALL BE LISTED AND LABELED IN ACCORDANCE WITH UL 1703 OR BOTH UL 61730-1 AND UL 61730-2 (CBC 3111.3.1) FOR THE PANEL ORIENTATIONS SHOWN ON PLANS, AND THIS SHALL BE INDICATED ON THE DRAWINGS.

   b. SOLAR PANEL ORIENTATION (PORTRAIT AND/OR LANDSCAPE LAYOUTS), ANCHORAGE POINT LOCATION, AND INSTALLATION TOLERANCE RANGE SHALL BE SPECIFIED ON THE DRAWINGS. PANEL CONNECTION GEOMETRY SHALL BE CONSISTENT WITH UL 1703 TESTS (AND UL 2703 TEST IF UTILIZED). IF HORIZONTAL SLIP JOINTS (e.g., THERMAL EXPANSION JOINTS) IN FRAMING MEMBERS ARE PRESENT, PANELS MUST NOT SPAN ACROSS NOR BE CONNECTED ON OPPOSING SIDES OF THE SLIP JOINTS.

   c. DRAWINGS MUST SPECIFY OVERALL SOLAR PANEL DIMENSIONS AND FULLY-DIMENSIONED FRAME CONFIGURATION OF THE SPECIFIED PANEL INCLUDING HEIGHT, LENGTH, WIDTH, THICKNESS OF EACH WEB/FLANGE, AND MATERIAL GRADE.

   d. DRAWINGS MUST SPECIFY THE SOLAR PANEL LOAD RATING IN POUNDS PER SQUARE FOOT (psf) BASED ON AN EFFECTIVE AREA EQUAL TO THE AREA OF ONE PV PANEL. THE LOAD RATING SHALL BE PROVIDED AS BOTH ALLOWABLE AND STRENGTH LEVEL CAPACITIES, FOR CLARITY.

27. SHOW NOTIFICATIONS AND MARKINGS FOR DISCONNECT MEANS, PER CFC 1207.4.1 AND CEC 110.21(B) AND 706.15(C).

28. APPROVED SIGN SHALL BE PROVIDED ON OR ADJACENT TO ALL ENTRY DOORS FOR ESS ROOMS OR AREAS AND ON ENCLOSURE OF ESS CABINETS AND WALK-IN UNITS LOCATED OUTDOORS, ON ROOF TOPS OR IN OPEN PARKING GARAGES, PER CFC 1207.4.8.

CALIFORNIA STATE FIRE MARSHAL PHOTOVOLTAIC INSTALLATION GUIDELINES LABELS

PLACE ON ALL CONDUIT, LOCATED ON ROOF, INTERIOR AND EXTERIOR, EVERY 5 FEET, AT TURNS AND ABOVE AND/OR BELOW PENETRATIONS AND ALL DC COMBINER AND JUNCTION BOXES, IN ⅜" WHITE LETTERING ON RED BACKGROUND, ON FADE-RESISTANT MATERIAL.

WARNING: PHOTOVOLTAIC POWER SOURCE

PLACE THIS LABEL WITHIN MAIN SERVICE DISCONNECT (OR ON OUTSIDE IF DISCONNECT IS OPERABLE WITH COVER CLOSED)

CAUTION: SOLAR ELECTRIC SYSTEM

REFLECTIVE, WHITE LETTERING ON RED BACKGROUND, TYPICAL UNLESS OTHERWISE NOTED

CEC 690.13 (B) & 706.15 (C)
PLACE THIS LABEL ON **ALL** DISCONNECTING MEANS WHERE ENERGIZED IN AN OPEN POSITION

WARNING
ELECTRIC SHOCK HAZARD
DO NOT TOUCH TERMINALS
TERMINALS ON BOTH THE LINE AND LOAD SIDE MAY BE ENERGIZED IN THE OPEN POSITION

CEC 690.53
PLACE THIS LABEL ON **ALL** PHOTOVOLTAIC **DC** DISCONNECTING MEANS (ON INVERTER IF INTEGRATED DC DISCONNECTS ***AND*** AT SEPARATE DC DISCONNECT IF APPLICABLE)

PHOTOVOLTAIC SYSTEM DISCONNECT	
RATED MAX POWER POINT CURRENT (IMP):	10.82A
RATED MAX POWER POINT VOLTAGE (VMP):	38.37V
MAX SYSTEM VOLTAGE (VOC):	561V
SHORT CIRCUIT CURRENT (ISC):	57A

CEC 690.54
PLACE THIS LABEL AT "INTERACTIVE POINT OF INTERCONNECTION" (AT MAIN SERVICE PANEL ***AND*** SUBPANEL IF APPLICABLE)

INVERTER "INV-A"	
INTERACTIVE PHOTOVOLTAIC POWER SOURCE	
RATED AC OUTPUT CURRENT (A):	50A
NOMINAL OPERATING AC VOLTAGE (V):	208V, 3-PH

CEC 1207.4.8
PLACE THIS LABEL AT BATTERY STORAGE SYSTEM.

BATTERY STORAGE SYSTEM

CEC 705.10(D)(4)
PLACE THIS LABEL AT UTILITY METER.

WARNING
DUAL POWER SOURCES SECOND SOURCE IS PHOTOVOLTAIC SYSTEM

CEC 690.13(B)
PLACE THIS LABEL AT ALL PV DISCONNECTION POINTS.

PV SYSTEM DISCONNECT

CEC 690.56(C)(2)
PLACE THIS LABEL AT PV RAPID SHUTDOWN SWITCH.

RAPID SHUTDOWN SWITCH FOR SOLAR PV SYSTEM

CEC 705.12(B)(3)
PLACE THIS LABEL AT P.O.C. TO SERVICE DISTRIBUTION EQUIPMENT (I.E. MAIN PANEL ***AND*** SUBPANEL IF APPLICABLE)

WARNING
POWER SOURCE OUTPUT CONNECTION DO NOT RELOCATE THIS OVERCURRENT DEVICE

CEC 705.10
PLACE A PERMANENT PLAQUE DENOTING ALL ELECTRIC POWER SOURCES ON OR IN THE PREMISES AT THE SERVICE EQUIPMENT LOCATION AND AT ALL ELECTRIC POWER PRODUCTION SOURCES CAPABLE OF INTERCONNECTION

CAUTION MULTIPLE SOURCES OF POWER

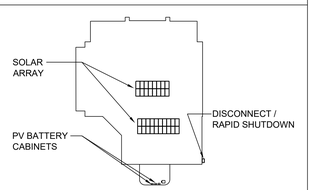

CEC 690.56(C)
PLACE THIS LABEL AT SERVICE EQUIPMENT LOCATION.

SOLAR PV SYSTEM IS EQUIPPED WITH RAPID SHUTDOWN

TURN RAPID SHUTDOWN SWITCH TO THE "OFF" POSITION TO SHUTDOWN PV SYSTEM AND REDUCE SHOCK HAZARD IN ARRAY

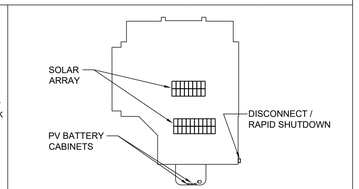

BLACK LETTERING ON YELLOW BACKGROUND

Rose Sing Eastham & Associates
Electrical Consultants
131 S. Dunworth - (559)733-2671
Visalia, California 93292-6705

REGISTERED PROFESSIONAL ENGINEER ROSE ANNE SING EASTHAM No. E-18786 Exp. 6/30/27 ELECTRICAL STATE OF CALIFORNIA

IDENTIFICATION STAMP
DIV. OF THE STATE ARCHITECT
APP: 02-123307 INC:
REVIEWED FOR
SS ☑ FLS ☑ ACS ☑
DATE: 10/15/2025

Owner:
WASHINGTON UNIFIED SCHOOL DISTRICT

WASHINGTON UNIFIED SCHOOL DISTRICT
6041 SOUTH ELM AVE.
FRESNO, CA 93706

Project Name:
STUDENT SERVICES

Project Address:
WASHINGTON UNION HIGH SCHOOL
6041 SOUTH ELM AVE,
Fresno, CA 93706

integrated designs
by SOMAM, Inc.

ARCHITECTURE ENGINEERING INTERIOR DESIGN

6011 N. FRESNO STREET, SUITE 130
FRESNO CALIFORNIA 93710
P:(559) 436-0881 F:(559) 436-0887
E: design@somam.com
integrateddesigns.com

Ownership of Documents
This document, the ideas and designs incorporated herein, as an instrument of Professional Service is the property of Integrated Designs by SOMAM Inc. and is not to be used, in whole or in part for any other project without written authorization.
© COPYRIGHT 2020

Stamp:

Sheet Title:
SOLAR NOTES

Job No.: **5613**

Sheet No.: E2.22

Release: DSA Issue Date: 04-23-25

1" = 50'-0" 1" = 40'-0" 1" = 30'-0" 1" = 20'-0" 1/4" = 1'-0" 1/8" = 1'-0"
Z:\Drafting\Jobs\PDS\5XXX\5613\Trees\Washington High School\5613 Washington Union HS - Student Services Bldg\E2.22.dwg DATE SAVED: 08/06/25 BY: Haven DATE PLOTTED: 08/19/25 JOB # 25-108-SE

UNIRAC RACKING COMPONENTS				
1	RAIL	320185M	SM RAIL 185" MILL	DETAILS #1/E2.23
2	PRO SERIES END CLAMP	302035M	ENDCLAMP PRO	DETAILS #1/E2.23
3	PRO SERIES MID CLAMP	302030M	MIDCLAMP PRO - MILL	DETAILS #1/E2.23
4	STANDOFF	304001C	L-FOOT SERRATED W/T-BOLT, CLR	DETAILS #3/E2.23
5	BONDING SPLICE BAR	303019M	BND SPLICE BAR PRO SERIES MILL	DETAILS #1/E2.23

LOADS USED FOR DESIGN	
BUILDING CODE	ASCE 7-16
BASIC WIND SPEED	100.00 mph
GROUND SNOW LOAD	0.00 psf
SEISMIC SS	0.654
ELEVATION	237 ft
RISK CATEGORY	II
WIND EXPOSURE	C
TOPOGRAPHICAL FACTOR	1.00
VELOCITY PRESSURE	18.5 psf

SOLAR PANEL DIMENSIONS	
WIDTH	41.1"
LENGTH	74.0"
THICKNESS	1.26"
WEIGHT	48.5 LBS.

PANEL LOAD RATING (psf) (1)		
	PUSH	PULL
ALLOWABLE STRENGTH LEVEL	75	55
	113	84

(1) BASED ON ONE PANEL AS THE EFFECTIVE AREA.
(2) DESIGN LOADS ARE LRFD.

LEGEND	
	SOLAR PANELS
o	STANDOFF ATTACHMENT POINT
▪	SPLICE
—	RAIL LINES
- - - - -	ROOF STRUCTRE
DISTRIBUTED DEAD LOAD	2.39 psf
AVERAGE ROOF POINT DEAD LOAD	22.75 lbs

GENERAL NOTES:

1. CANTILEVER LENGTH L2 SHALL NOT BE LONGER THAN L1/3.
2. SOLAR PANEL ATTACHMENT PER DETAIL #4/E2.23.
3. ALL COMPONANT BOLTS SHALL HAVE A TORQUE VALUE PER THE MANUFACTURER'S SPECIFICATIONS.
4. ALL CLAMPS AND RAILS SHALL BE BARE ALUMINUM.
5. SEE SOLAR PANEL CUT SHEETS ON SHEET #E2.21 FOR SOLAR PANEL DIMENSIONS.
6. ALL CLAMP BOLTS/NUTS SHALL BE 304 SS.

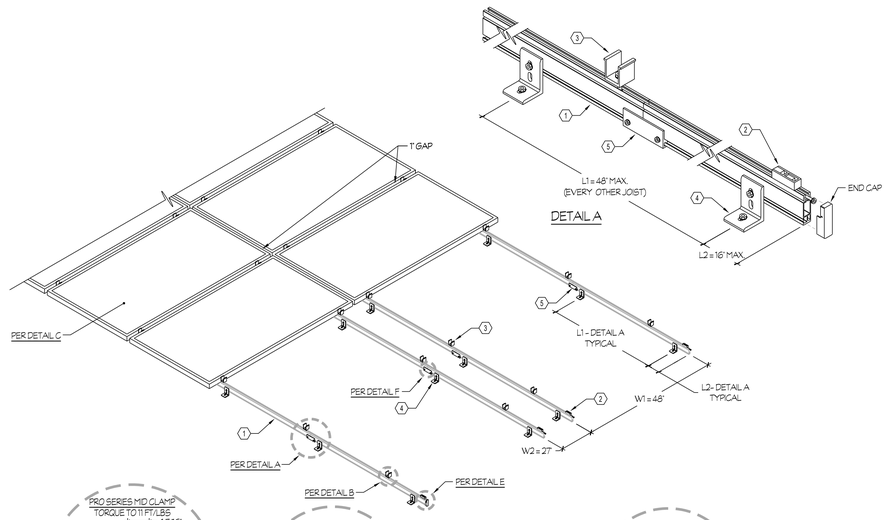

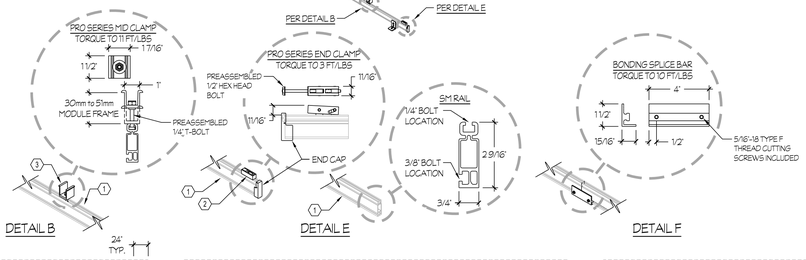

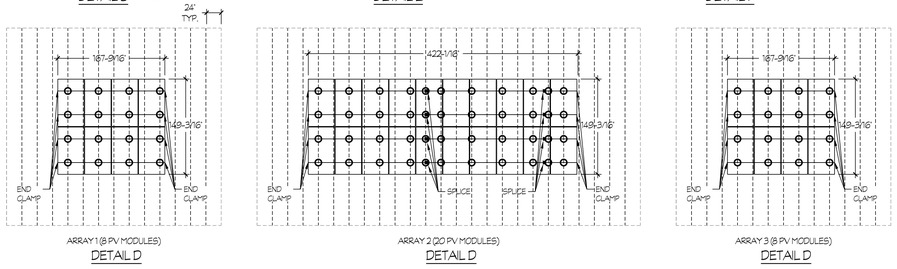



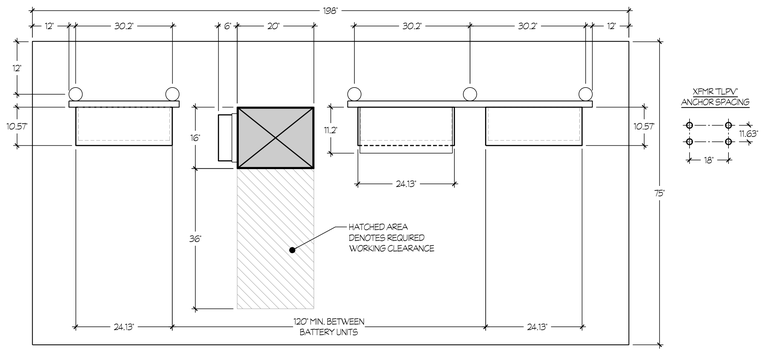

PLAN VIEW

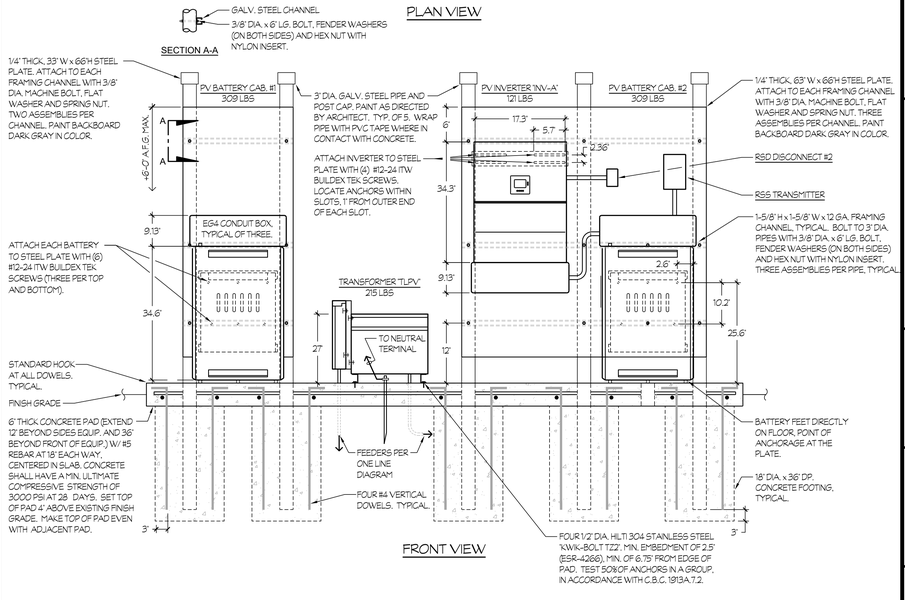

FRONT VIEW

1 ASSEMBLY ISOMETRIC VIEW

NTS

7 XFMR "TLPV", PV INVERTER AND PV BATTERY STORAGE MOUNTING

NTS

SEE 'LOADS USED FOR DESIGN' CHART ON DETAIL #1/E2.23 FOR WIND LOAD INFORMATION.

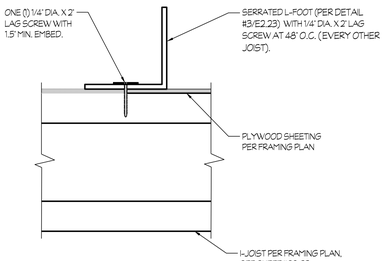

2 SOLAR ATTACHMENT - L FOOT

FOR WOOD FRAME ROOF

NTS

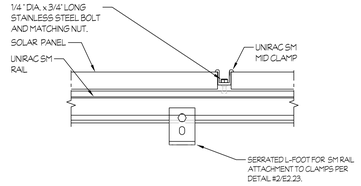

4 SOLAR PANEL MOUNT - SIDE

FOR WOOD FRAMED ROOF

NTS

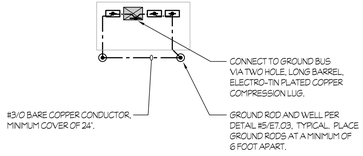

6 XFMR "TLPV" INVERTER BATTERY STORAGE - GROUNDING AND BONDING

NTS

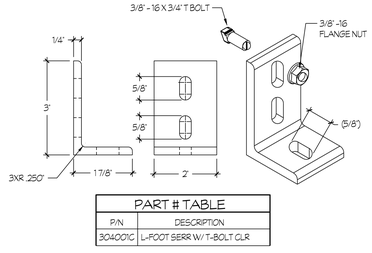

PART # TABLE	
P/N	DESCRIPTION
304001C	L-FOOT SERR W/ T-BOLT CLR

3 SERRATED L-FOOT DETAIL

NTS

IDENTIFICATION STAMP
DIV. OF THE STATE ARCHITECT
APP: 02-123307 INC:
REVIEWED FOR
SS ☑ FLS ☑ ACS ☑
DATE: 10/15/2025

Owner:
WASHINGTON UNIFIED SCHOOL DISTRICT

WASHINGTON UNIFIED SCHOOL DISTRICT
6041 SOUTH ELM AVE.
FRESNO, CA 93706

Project Name:
STUDENT SERVICES

Project Address:
WASHINGTON UNION HIGH SCHOOL
6041 SOUTH ELM AVE,
Fresno, CA 93706

integrated designs
by SOMAM, Inc.

ARCHITECTURE ENGINEERING INTERIOR DESIGN

6011 N. FRESNO STREET, SUITE 130
FRESNO CALIFORNIA 93710
P:(559) 436-0881 F:(559) 436-0887
E: design@somam.com
integrateddesigns.com

Ownership of Documents
This document, the ideas and designs incorporated herein, as an instrument of Professional Service is the property of Integrated Designs by SOMAM Inc. and is not to be used, in whole or in part for any other project without written authorization.
© COPYRIGHT 2020

Stamp:

Sheet Title:
SOLAR DETAILS

Job No.:
5613

Sheet No.:
E2.23

Release: DSA
Issue Date: 04-23-25

Rose Sing Eastham & Associates
Electrical Consultants
131 S. Dunworth – (559)733-2671
Visalia, California 93292-6705

REGISTERED PROFESSIONAL ENGINEER
KIRK J. EASTHAM
No. E-18786
Exp. 6/30/27
ELECTRICAL
STATE OF CALIFORNIA

Z:\Drafting\Jobs\#25\5613\S\Revit\Washington High School\5613 Washington Union HS - Student Services Bldg\E2.23.dwg DATE: 9:40:31, 09/19/25 BY: Kiran PLOTTED: 09/19/25 JOB # 25-108-SE

ROOM LEGEND					
#	ROOM NAME	#	ROOM NAME	#	ROOM NAME
101	LOBBY	118	OFFICE	135	BOOK STORAGE
102	RECEPTION	119	WAITING AREA	136	CAMPUS POLICE
103	ADMIN.	120	WAITING AREA	137	TOILET ROOM
104	ADMIN.	121	OFFICE	138	HALL
105	HALL	122	OFFICE	139	OFFICE
106	NURSE	123	OFFICE	140	OFFICE
107	TOILET ROOM	124	OFFICE	141	FIRE SPRINKLER RISER
108	TOILET ROOM	125	OFFICE	142	STAFF LOUNGE
109	WORKING ROOM	126	OFFICE	143	HALL
110	ARCHIVE STORAGE	127	DIRECTOR	144	JANITOR
111	PAPER STORAGE	128	HALL	145	TOILET ROOM
112	OFFICE	129	CONFERENCE	146	ELECTRICAL ROOM
113	OFFICE	130	CONFERENCE	147	
114	OFFICE	131	HALL	148	
115	OFFICE	132	DIRECTOR	149	WATER HEATER STORAGE
116	OFFICE	133	HALL		
117	OFFICE	134	MAIL PICK-UP		

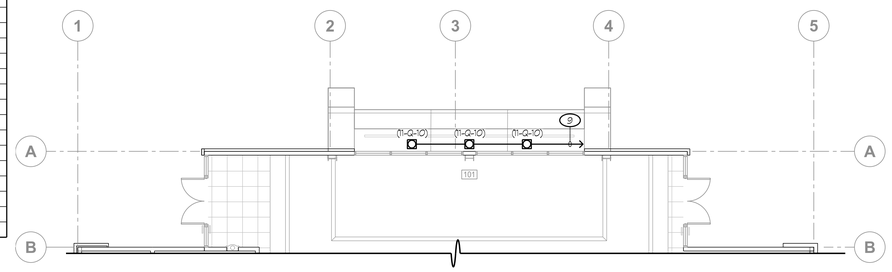

3 **LIGHTING PLAN - UPPER**
STUDENT SERVICES
SCALE: 1/8" = 1'-0"

GENERAL NOTE:

1. REFER TO DETAIL #12/E7.01 FOR CONDUIT SUPPORT DETAILS.
2. SEAL CONDUITS THROUGH FIRE RATED WALLS WITH FIREPROOF MATERIAL. REFER TO DETAIL #10/E7.03 FOR REQUIREMENTS.

NOTES (THIS SHEET ONLY):

1. SYMBOLS EM AND EM DENOTE L.E.D. LIGHT FIXTURE EQUIPPED WITH AN EMERGENCY BATTERY PACK. CONNECT PER DETAIL #6/E7.01.
2. REFER TO DETAIL #5/E7.01 FOR LOW VOLTAGE DEVICES AND LIGHTING CONTROL WIRING REQUIREMENTS, TYPICAL.
3. – – –C5– – – DENOTES CAT. 5e CABLE. ELECTRICAL CONTRACTOR MAY USE PRETERMINATED CAT. 5e CABLING OR PROVIDE CAT. 5e CABLING, MODULAR JACKS ON EACH END AND TERMINATE THE MODULAR JACKS USING THE TIA/EIA-568-B.2 PIN-PAIR SPECIFICATION. ELECTRICAL CONTRACTOR SHALL PROVIDE CONDUIT AND OUTLET BOXES IN WALLS FOR ROUTING OF CABLING. CABLE MAY BE ROUTED IN FREE-AIR, WHEN LOCATED IN ACCESSIBLE ATTIC SPACE ABOVE T-BAR CEILINGS. AT GYPBOARD CEILINGS, PROVIDE A DOUBLE-GANG LOW VOLTAGE MOUNTING PLATE BRACKET, CADDY #MPL52 OR EQUAL, AT THE RJ-45 JACKS (EMBEDDED CONTROLS) OF THE SURFACE MOUNTED LIGHT FIXTURES FOR PASSAGE OF CAT. 5e CABLING.
4. PROVIDE POWER RELAY PACK PER DETAIL #7/E7.01 MOUNT ABOVE T-BAR CEILING IN ACCESSIBLE ATTIC SPACE OR HIGH ON WALL ABOVE LIGHT SWITCH. ROUTE 120V RECEPTACLE POWER THROUGH CONTACTS. SEE KEYNOTE #1 ON SHEET #E2.10 FOR ADDITIONAL INFORMATION. TYPICAL, U.O.N..
5. DENOTES POWER RELAY PACK THAT CONTROL ROOM DEVICES. SEE CORRESPONDING NOMENCLATURE FOR ROOM POWER CIRCUIT ON POWER PLAN. TYPICAL, U.O.N..
6. TYPICAL WHERE LOW VOLTAGE POWER RELAY PACKS ARE SHOWN ADJACENT TO ONE ANOTHER. RUN ONE CAT 5e CABLE BETWEEN ADJACENT POWER RELAY PACKS.
7. PULL IN AN UNSWITCHED PHASE CONDUCTOR FROM CIRCUIT CIRCUIT #3, FOR CONNECTION OF EMERGENCY BATTERY PACKS.
8. FOR CONTROL OF EXHAUST FAN , COORDINATE WITH MECHANICAL CONTRACTOR FOR MINIMUM RUNTIME AND PROGRAM AS REQUIRED.
9. EXTEND CIRCUIT TO UPPER DOWNLIGHTS AND CONNECT AS REQUIRED.

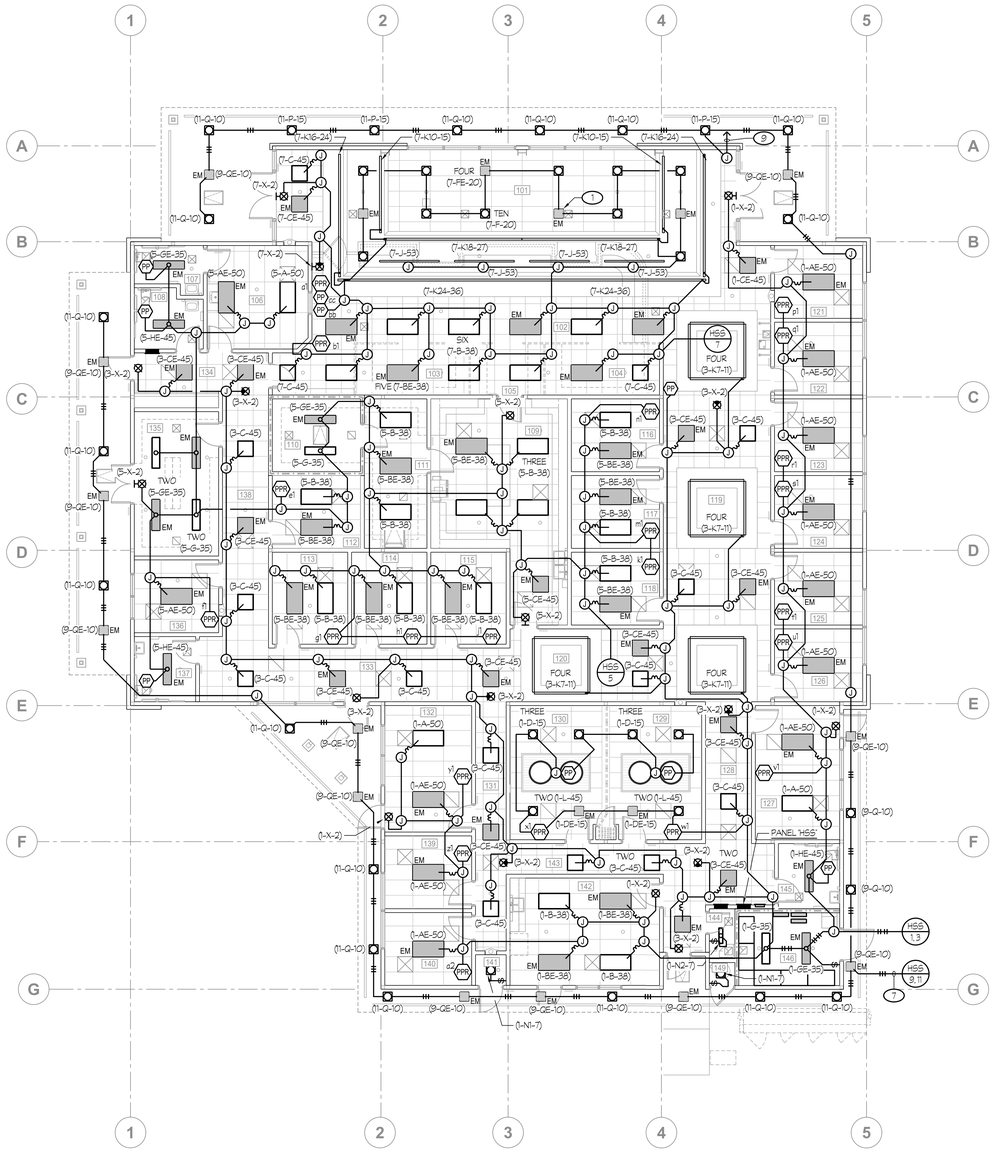

ROOM LEGEND					
#	ROOM NAME	#	ROOM NAME	#	ROOM NAME
101	LOBBY	118	OFFICE	135	BOOK STORAGE
102	RECEPTION	119	WAITING AREA	136	CAMPUS POLICE
103	ADMIN.	120	WAITING AREA	137	TOILET ROOM
104	ADMIN.	121	OFFICE	138	HALL
105	HALL	122	OFFICE	139	OFFICE
106	NURSE	123	OFFICE	140	OFFICE
107	TOILET ROOM	124	OFFICE	141	FIRE SPRINKLER RISER
108	TOILET ROOM	125	OFFICE	142	STAFF LOUNGE
109	WORKING ROOM	126	OFFICE	143	HALL
110	ARCHIVE STORAGE	127	DIRECTOR	144	JANITOR
111	PAPER STORAGE	128	HALL	145	TOILET ROOM
112	OFFICE	129	CONFERENCE	146	ELECTRICAL ROOM
113	OFFICE	130	CONFERENCE	147	
114	OFFICE	131	HALL	148	
115	OFFICE	132	DIRECTOR	149	WATER HEATER STORAGE
116	OFFICE	133	HALL		
117	OFFICE	134	MAIL PICK-UP		

NOTES (THIS SHEET ONLY):

1. — —C5— — DENOTES CAT. 5e CABLE. ELECTRICAL CONTRACTOR MAY USE PRETERMINATED CAT. 5e CABLING OR PROVIDE CAT. 5e CABLING, MODULAR JACKS ON EACH END AND TERMINATE THE MODULAR JACKS USING THE TIA/EIA-568-B.2 PIN-PAIR SPECIFICATION. ELECTRICAL CONTRACTOR SHALL PROVIDE CONDUIT AND OUTLET BOXES IN WALLS FOR ROUTING OF CABLING. CABLE MAY BE ROUTED IN FREE-AIR, WHEN LOCATED IN ACCESSIBLE ATTIC SPACE ABOVE T-BAR CEILINGS. AT GYPBOARD CEILINGS, PROVIDE A DOUBLE-GANG LOW VOLTAGE MOUNTING PLATE BRACKET, CADDY #MPLS2 OR EQUAL, AT THE RJ-45 JACKS (EMBEDDED CONTROLS) OF THE SURFACE MOUNTED LIGHT FIXTURES FOR PASSAGE OF CAT. 5e CABLING.
2. TYPICAL OF NETWORK INTERFACE BRIDGE (SYMBOL BRG): LOCATE THE NETWORK INTERFACE BRIDGE IN THE ACCESSIBLE ATTIC SPACE ABOVE THE T-BAR CEILING OR SURFACE MOUNT ON THE WALL. RUN 1/2"C - 2 #12 TO NEAREST 'UNSWITCHED' LIGHTING CIRCUIT. RUN CAT. 5e CABLE BETWEEN ADJACENT NETWORK INTERFACE BRIDGES, WHERE APPLICABLE. REFER TO DETAIL #8/E7.01 FOR ADDITIONAL INFORMATION AND REQUIREMENTS.
3. FLUSH MOUNT THE NETWORK LIGHTING CONTROLLER 'NLC' AT +42" A.F.F.. LOCATE THE GRAPHIC WALLPOD ADJACENT TO THE NETWORK CONTROLLER. RUN 1"C - ONE CAT. 5e PATCH CABLE, LENGTH AS REQUIRED, FROM THE 'NLC' TO THE EXISTING PATCH PANEL IN THE MAIN CROSS-CONNECT LOCATED IN ELECTRICAL ROOM #146. REFER TO DETAIL #4/E7.01 FOR ADDITIONAL INFORMATION AND REQUIREMENTS.

GENERAL NOTE:

1. SEAL CONDUITS THROUGH FIRE RATED WALLS WITH FIREPROOF MATERIAL. REFER TO DETAIL #10/E7.03 FOR REQUIREMENTS.

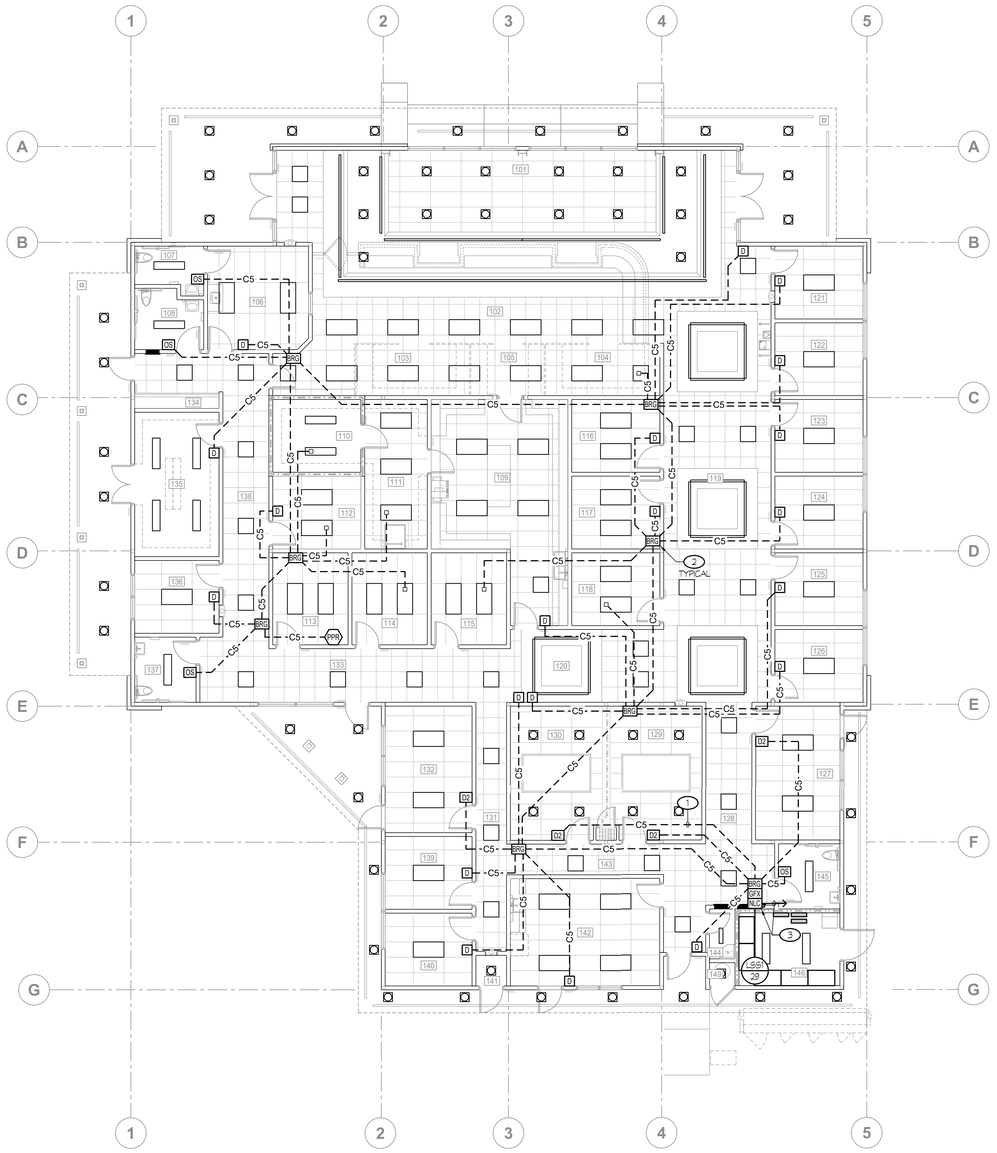

1 **LIGHTING CONTROL PLAN - AUTOMATED DEMAND RESPONSE**

STUDENT SERVICES

SCALE: 1/8" = 1'-0"

WALL LEGEND
8 INCH CMU WALL
6 INCH 1 HOUR RATING FIRE WALL
6 INCH 2 HOUR RATING FIRE WALL
6 INCH WOOD STUDS WALL

Rose Sing Eastham & Associates
Electrical Consultants
131 S. Dunworth – (559)733-2671
Visalia, California 93292-6705

REGISTERED PROFESSIONAL ENGINEER — DAVID KIRK EASTHAM — No. E-18786 Exp. 6/30/27 — ELECTRICAL — STATE OF CALIFORNIA

IDENTIFICATION STAMP
DIV. OF THE STATE ARCHITECT
APP: 02-123307 INC:
REVIEWED FOR
SS ☑ FLS ☑ ACS ☑
DATE: 10/15/2025

Owner:
WASHINGTON UNIFIED SCHOOL DISTRICT

WASHINGTON UNIFIED SCHOOL DISTRICT
6041 SOUTH ELM AVE.
FRESNO, CA 93706

Project Name:
STUDENT SERVICES

Project Address:
WASHINGTON UNION HIGH SCHOOL
6041 SOUTH ELM AVE,
Fresno, CA 93706

integrated designs
by SOMAM, Inc.

ARCHITECTURE
ENGINEERING
INTERIOR DESIGN

6011 N. FRESNO STREET, SUITE 130
FRESNO CALIFORNIA 93710
P:(559) 436-0881 F:(559) 436-0887
E: design@somam.com
integrateddesigns.com

Ownership of Documents
This document, the ideas and designs incorporated herein, as an instrument of Professional Service is the property of Integrated Designs by SOMAM Inc. and is not to be used, in whole or in part for any other project without written authorization.
© COPYRIGHT 2020

Stamp:

Sheet Title:
LIGHTING CONTROL PLAN

Job No.: **5613**

Sheet No.: **E3.11**

Release: DSA Issue Date: 04-23-25

1" = 50'-0" 1" = 40'-0" 1" = 30'-0" 1" = 20'-0" 1/8" = 1'-0" 1/4" = 1'-0"

Z:\Drafting\Jobs\RDC\GOVOUS\Fresno\Washington High School\5613 Washington Union HS - Student Services Bldg\E3.11.dwg [DATE: 3/4/25 - 09/10/25 BY: Private [DATE: FLOTTER: 09/19/25 - 09:31 P: Z5-A3B-SE

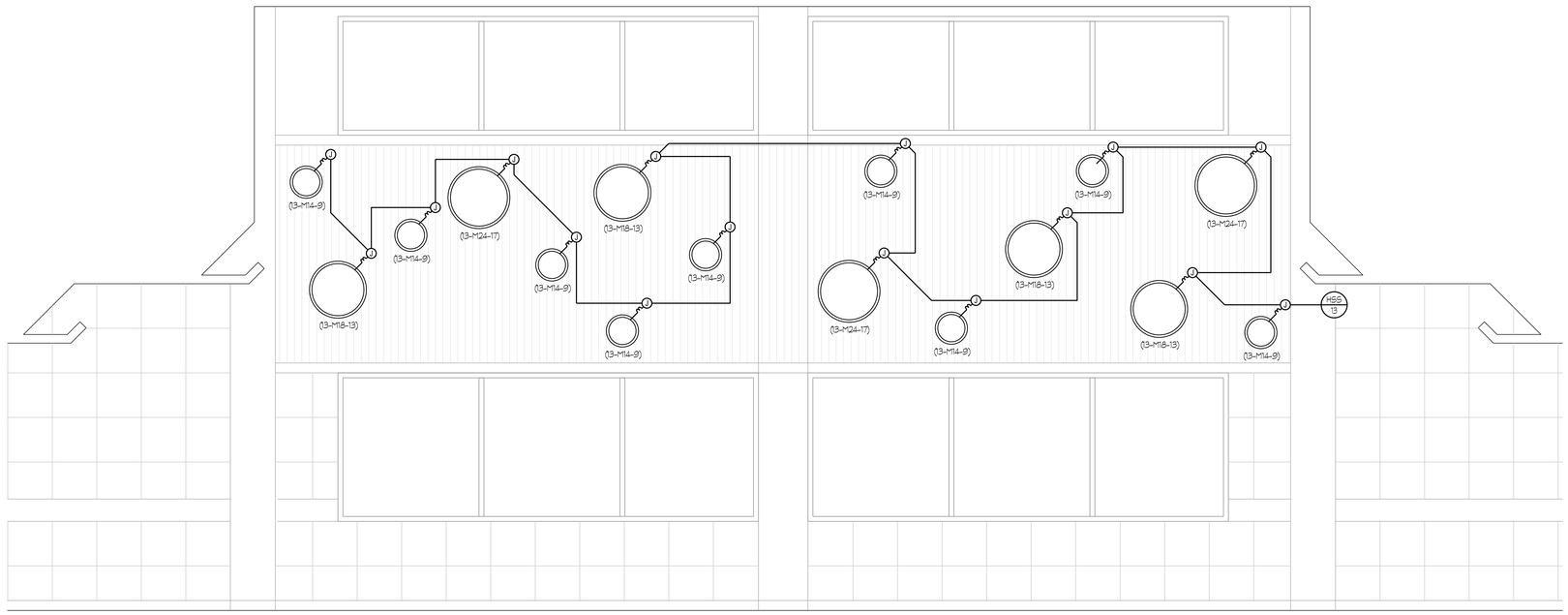

1 ENLARGED LIGHTING PLAN - LOBBY WALL ELEVATION

STUDENT SERVICES

SCALE: 1/2" = 1'-0"

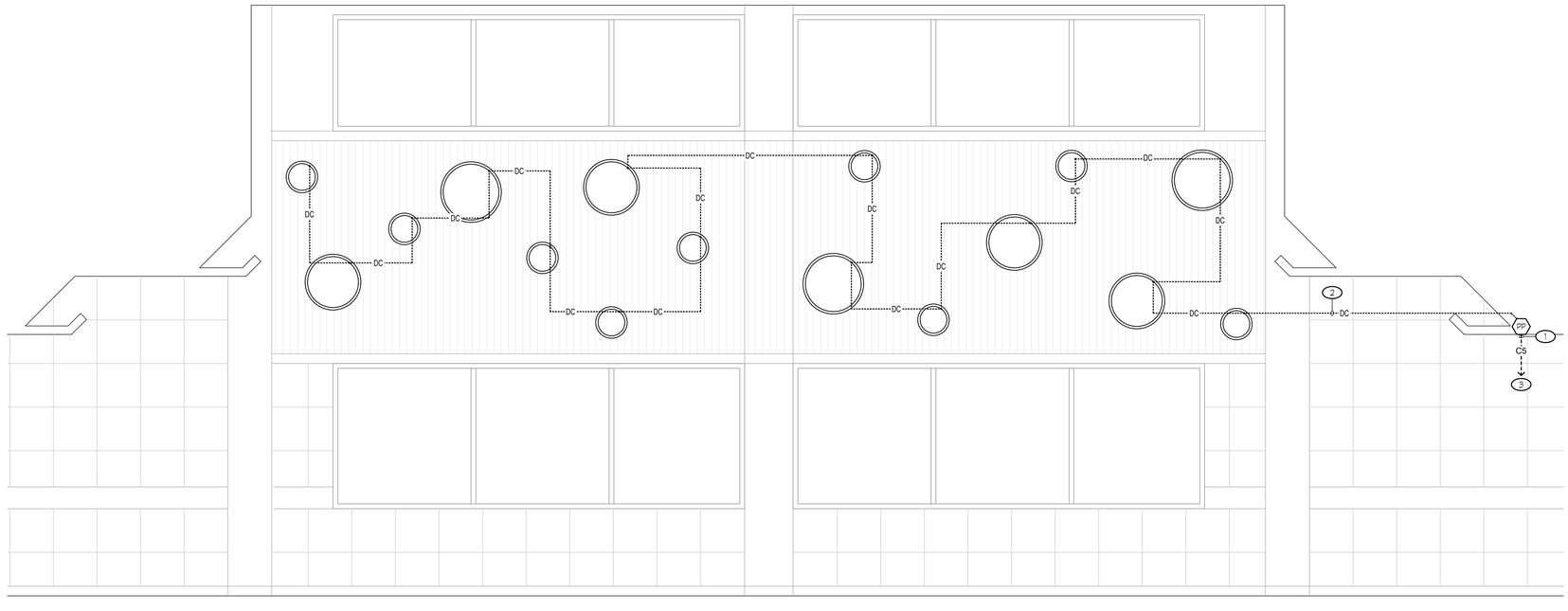

2 ENLARGED LIGHTING CONTROLS PLAN - LOBBY WALL ELEVATION

STUDENT SERVICES

SCALE: 1/2" = 1'-0"

NOTES (THIS SHEET ONLY):

1. ••••••••••C5•••••••••• DENOTES CAT. 5e CABLE. ELECTRICAL CONTRACTOR MAY USE PRETERMINATED CAT. 5e CABLING OR PROVIDE CAT. 5e CABLING, MODULAR JACKS ON EACH END AND TERMINATE THE MODULAR JACKS USING THE TIA/EIA-568-B.2 PIN-PAIR SPECIFICATION. ELECTRICAL CONTRACTOR SHALL PROVIDE CONDUIT AND OUTLET BOXES IN WALLS FOR ROUTING OF CABLING. CABLE MAY BE ROUTED IN FREE-AIR, WHEN LOCATED IN ACCESSIBLE ATTIC SPACE ABOVE T-BAR CEILINGS. AT GYPBOARD CEILINGS, PROVIDE A DOUBLE-GANG LOW VOLTAGE MOUNTING PLATE BRACKET, CADDY #MPLS2 OR EQUAL, AT THE RJ-45 JACKS (EMBEDDED CONTROLS) OF THE SURFACE MOUNTED LIGHT FIXTURES FOR PASSAGE OF CAT. 5e CABLING.
2. ——DC—— DENOTES 0-10VDC CONTROL. PROVIDE 1/2C - LIBERTY WIRE CABLE, INC. #18-2C-LVB OR EQUAL.
3. LOW VOLTAGE CONTROLS TO BE LOCATED IN ROOM 102 RECEPTION DESK. VERIGY EXACT LOCATION WITH OWNER/GENERAL CONTRACTOR PRIOR TO ROUGH-IN.

IDENTIFICATION STAMP
DIV. OF THE STATE ARCHITECT
APP: 02-123307 INC:
REVIEWED FOR
SS ☑ FLS ☑ ACS ☑
DATE: 10/15/2025

Owner:

WASHINGTON UNIFIED SCHOOL DISTRICT

6041 SOUTH ELM AVE.
FRESNO, CA 93706

Project Name:

STUDENT SERVICES

Project Address:

WASHINGTON UNION HIGH SCHOOL
6041 SOUTH ELM AVE,
Fresno, CA 93706

integrated designs
by SOMAM, Inc.

ARCHITECTURE
ENGINEERING
INTERIOR DESIGN

6011 N. FRESNO STREET, SUITE 130
FRESNO CALIFORNIA 93710
P:(559) 436-0881 F:(559) 436-0887
E: design@somam.com
integrateddesigns.com

Ownership of Documents
This document, the ideas and designs incorporated herein, as an instrument of Professional Service is the property of Integrated Designs by SOMAM Inc. and is not to be used, in whole or in part for any other project without written authorization.
© COPYRIGHT 2020

Stamp:

Sheet Title:

LIGHTING PLAN - LOBBY WALL ELEVATIONS

Job No.: 5613

Sheet No.: E3.12

Release: DSA Issue Date: 04-23-25

Rose Sing Eastham & Associates
Electrical Consultants
131 S. Dunworth – (559)733-2671
Visalia, California 93292-6705

DEREK KIRK EASTHAM No. E-18786 Exp. 6/30/27 ELECTRICAL STATE OF CALIFORNIA

Z:\Drafting\Jobs\PDC\SOMDOT\Fresno\Washington High School\5613 Washington Union HS - Student Services Bldg\E3.12.dwg [DATE: 04/23, 07:17:12am] [DATE, SHEET: 09/19/25] [DATE, PLOTTED: 09/19/25] [BY: Phoebe] [XREF, ATTACHED: 25-108-SE] [JOB #: 25-108-SE]

ROOM LEGEND					
#	ROOM NAME	#	ROOM NAME	#	ROOM NAME
101	LOBBY	118	OFFICE	135	BOOK STORAGE
102	RECEPTION	119	WAITING AREA	136	CAMPUS POLICE
103	ADMIN.	120	WAITING AREA	137	TOILET ROOM
104	ADMIN.	121	OFFICE	138	HALL
105	HALL	122	OFFICE	139	OFFICE
106	NURSE	123	OFFICE	140	OFFICE
107	TOILET ROOM	124	OFFICE	141	FIRE SPRINKLER RISER
108	TOILET ROOM	125	OFFICE	142	STAFF LOUNGE
109	WORKING ROOM	126	OFFICE	143	HALL
110	ARCHIVE STORAGE	127	DIRECTOR	144	JANITOR
111	PAPER STORAGE	128	HALL	145	TOILET ROOM
112	OFFICE	129	CONFERENCE	146	ELECTRICAL ROOM
113	OFFICE	130	CONFERENCE	147	PATIO
114	OFFICE	131	HALL	148	SWITCH GEAR ROOM
115	OFFICE	132	DIRECTOR	149	WATER HEATER STORAGE
116	OFFICE	133	HALL		
117	OFFICE	134	MAIL PICK-UP		

WALL LEGEND
8 INCH CMU WALL
6 INCH 1 HOUR RATING FIRE WALL
6 INCH 2 HOUR RATING FIRE WALL
6 INCH WOOD STUDS WALL

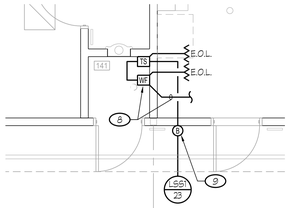

3 ENLARGED FIRE SPRINKLER RISER RM - 141

STUDENT SERVICES SCALE: 1/4" = 1'-0"

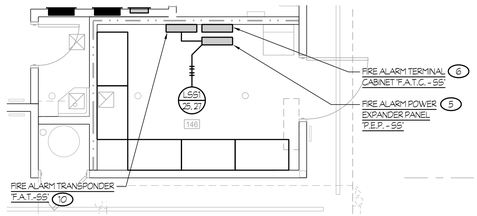

4 ENLARGED PARTIAL ELECTRICAL RM - 146

STUDENT SERVICES SCALE: 1/4" = 1'-0"

GENERAL NOTE:

1. REFER TO DETAIL #12/E7.01 FOR CONDUIT SUPPORT DETAILS.
2. SEAL CONDUITS THROUGH FIRE RATED WALLS WITH FIREPROOF MATERIAL. REFER TO DETAIL #10/E7.03 FOR REQUIREMENTS.

NOTES (THIS SHEET ONLY):

1. TYPICAL OF FIRE ALARM CIRCUITING BETWEEN NOTIFICATION APPLIANCES, U.O.N.: RUN 1/2"C - ONE "FN", ONE "FSP" CABLE BETWEEN NOTIFICATION APPLIANCES.
2. TYPICAL OF FIRE ALARM CIRCUITING BETWEEN ADDRESSABLE DEVICES (CONNECTED ONTO THE SIGNALINE LINE CIRCUIT "SLC"), U.O.N.: RUN 1/2"C - ONE "FA" CABLE BETWEEN ADDRESSABLE DEVICES.
3. MOUNT SMOKE DETECTOR ON THE SIDEWALL BETWEEN 4" AND 12" FROM THE CEILING.
4. 1/2"C - ONE "FSP" CABLE.
5. REFER TO DETAIL #3/E5.03, FOR FIRE ALARM POWER EXPANDER PANEL "P.E.P. - 55" MOUNTING REQUIREMENTS.
6. REFER TO DETAIL #4/E5.03, FOR FIRE ALARM TERMINAL CABINET "F.A.T.C. - 55" MOUNTING REQUIREMENTS.
7. 1/2"C - ONE "FN" CABLE.
8. CONNECT THE WATERFLOW SWITCH AT FIRE SPRINKLER RISER. COORDINATE EXACT LOCATION WITH FIRE SPRINKLER CONTRACTOR. RUN 1/2"C - 2 #14 FROM DUAL MONITOR MODULE TO THE WATERFLOW SWITCH. PROVIDE JUNCTION BOX AND LIQUIDTIGHT FLEXIBLE METALLIC CONDUIT AS REQUIRED.
9. CONNECT ELECTRIC BELL. ROUTE BRANCH CIRCUITING THRU THE WATERFLOW SWITCH. COORDINATE EXACT LOCATION WITH THE FIRE SPRINKLER CONTRACTOR PRIOR TO ROUGH-IN.
10. REFER TO DETAIL #5/E5.03, FOR MOUNTING REQUIREMENTS.
11. RUN 1/2"C - 2 #14 TO THE SUPERVISORY SWITCH AT THE POST INDICATOR VALVE "P.I.V.". REFER TO PARTIAL SITE ELECTRICAL PLAN, SHEET #E1.12, FOR CONTINUATION.
12. RUN 1/2"C - 2 #14 FROM MONITOR MODULE TO 120V DUCT SMOKE DETECTOR (PROVIDED BY MECH.) AND CONNECT TO AUXILIARY CONTACTS. IF SPARE AUXILIARY CONTACTS DO NOT EXIST, PROVIDE REMOTE CONTACTS CONNECTED IN SERIES WITH THE DUCT SMOKE DETECTOR. VERIFY WITH MECHANICAL CONTRACTOR PRIOR TO ROUGH-IN.

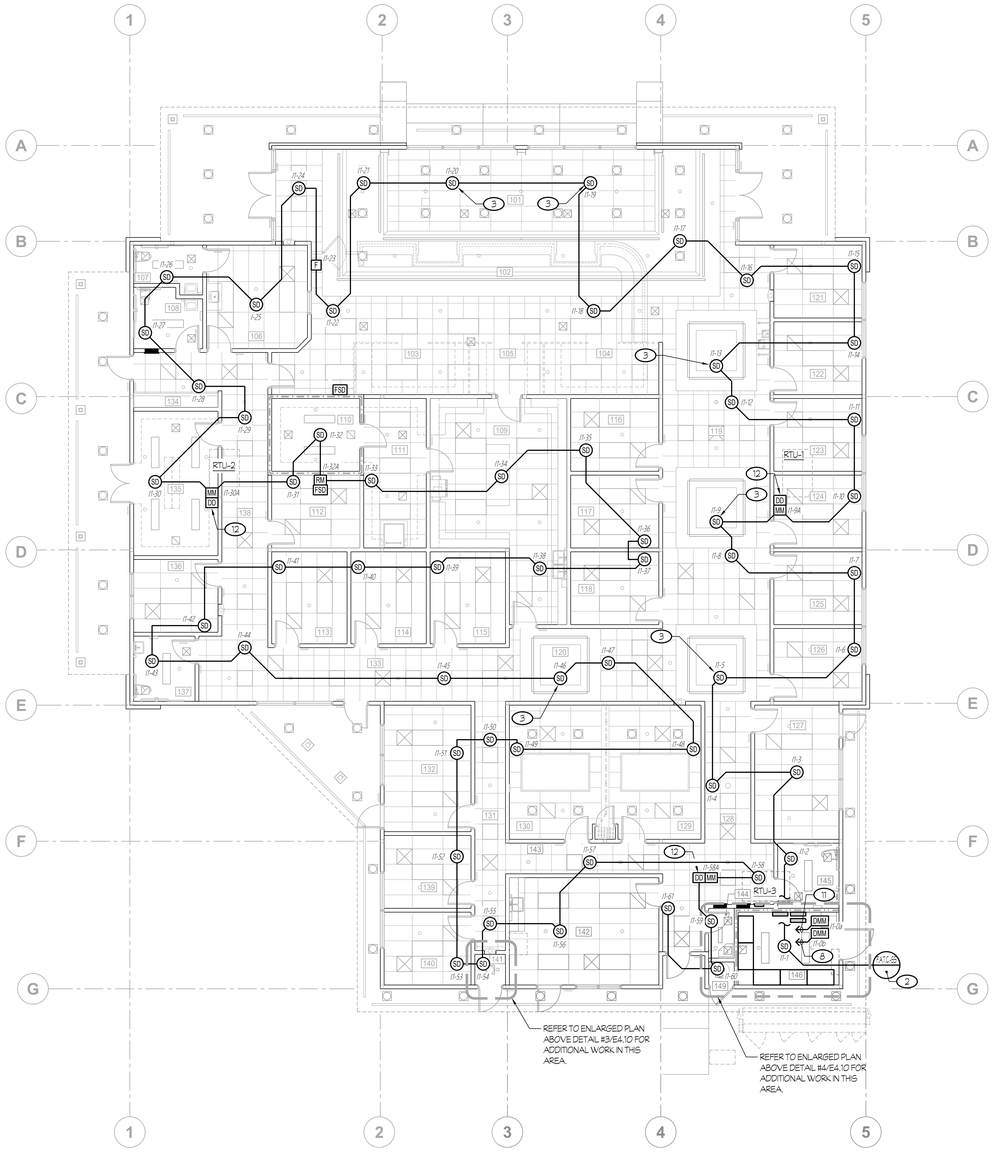

1 FIRE ALARM PLAN - INITIATION

STUDENT SERVICES SCALE: 1/8" = 1'-0"

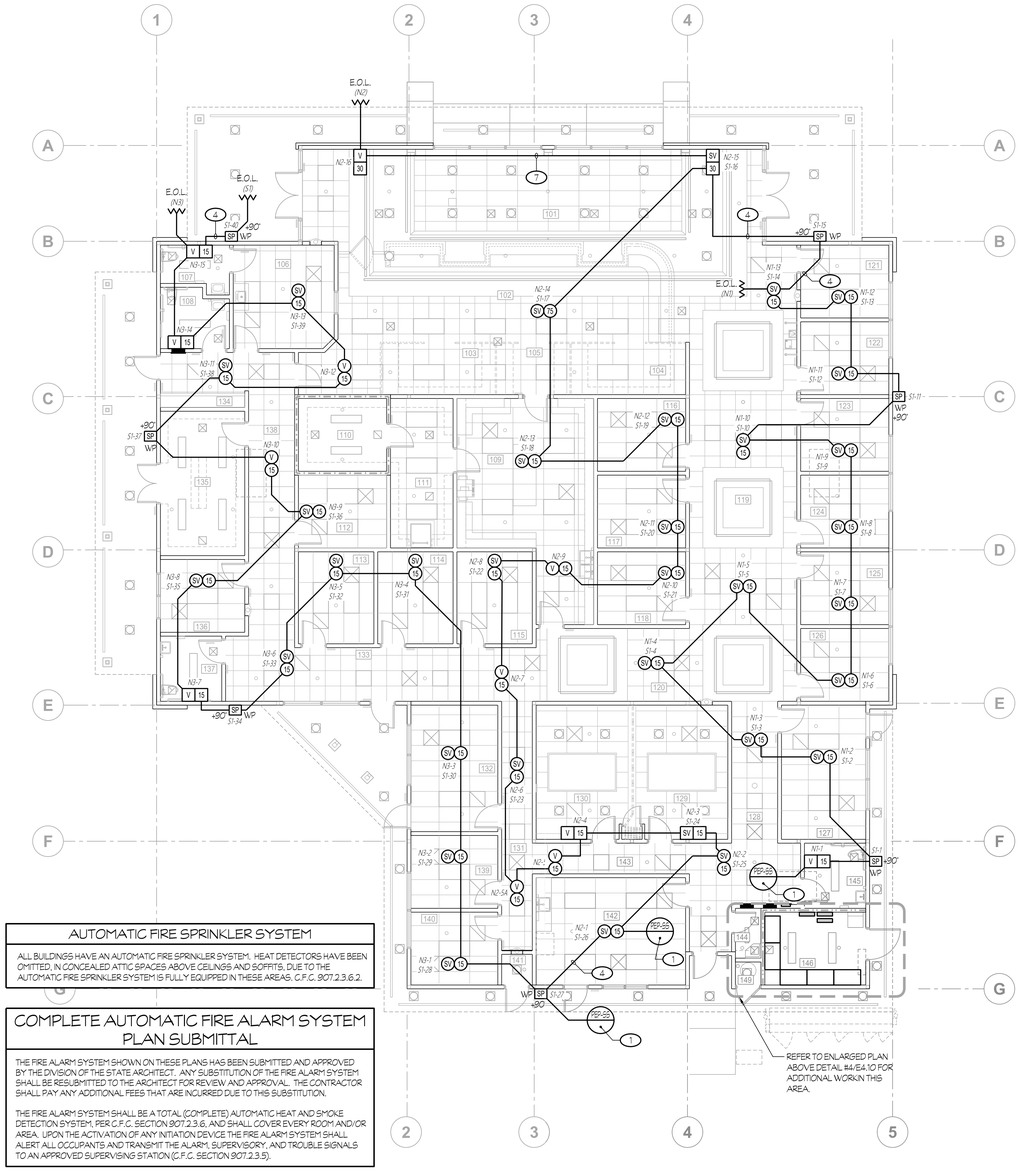

AUTOMATIC FIRE SPRINKLER SYSTEM

ALL BUILDINGS HAVE AN AUTOMATIC FIRE SPRINKLER SYSTEM. HEAT DETECTORS HAVE BEEN OMITTED, IN CONCEALED ATTIC SPACES ABOVE CEILINGS AND SOFFITS, DUE TO THE AUTOMATIC FIRE SPRINKLER SYSTEM IS FULLY EQUIPPED IN THESE AREAS, C.F.C. 907.2.3.6.2.

COMPLETE AUTOMATIC FIRE ALARM SYSTEM PLAN SUBMITTAL

THE FIRE ALARM SYSTEM SHOWN ON THESE PLANS HAS BEEN SUBMITTED AND APPROVED BY THE DIVISION OF THE STATE ARCHITECT. ANY SUBSTITUTION OF THE FIRE ALARM SYSTEM SHALL BE RESUBMITTED TO THE ARCHITECT FOR REVIEW AND APPROVAL. THE CONTRACTOR SHALL PAY ANY ADDITIONAL FEES THAT ARE INCURRED DUE TO THIS SUBSTITUTION.

THE FIRE ALARM SYSTEM SHALL BE A TOTAL (COMPLETE) AUTOMATIC HEAT AND SMOKE DETECTION SYSTEM, PER C.F.C. SECTION 907.2.3.6, AND SHALL COVER EVERY ROOM AND/OR AREA. UPON THE ACTIVATION OF ANY INITIATION DEVICE THE FIRE ALARM SYSTEM SHALL ALERT ALL OCCUPANTS AND TRANSMIT THE ALARM, SUPERVISORY, AND TROUBLE SIGNALS TO AN APPROVED SUPERVISING STATION (C.F.C. SECTION 907.2.3.5).

2 FIRE ALARM PLAN - NOTIFICATION

STUDENT SERVICES SCALE: 1/8" = 1'-0"

Rose Sing Eastham & Associates
Electrical Consultants
131 S. Dunworth – (559)733-2671
Visalia, California 93292-6705

IDENTIFICATION STAMP
DIV. OF THE STATE ARCHITECT
APP: 02-123307 INC:
REVIEWED FOR
SS ☑ FLS ☑ ACS ☑
DATE: 10/15/2025

Owner:
WASHINGTON UNIFIED SCHOOL DISTRICT
6041 SOUTH ELM AVE.
FRESNO, CA 93706

Project Name:
STUDENT SERVICES

Project Address:
WASHINGTON UNION HIGH SCHOOL
6041 SOUTH ELM AVE,
Fresno, CA 93706

integrated designs
by SOMAM, Inc.
ARCHITECTURE
ENGINEERING
INTERIOR DESIGN
6011 N. FRESNO STREET, SUITE 130
FRESNO CALIFORNIA 93710
P:(559) 436-0881 F:(559) 436-0887
E: design@somam.com
integrateddesigns.com

Ownership of Documents
This document, the ideas and designs incorporated herein, as an instrument of Professional Service is the property of Integrated Designs by SOMAM Inc. and is not to be used, in whole or in part for any other project without written authorization.
© COPYRIGHT 2020

Stamp:

Sheet Title:
FIRE ALARM PLANS

Job No.: **5613**

Sheet No.: **E4.10**

Release: DSA Issue Date: 04-23-25

ROBERT KIRK EASTHAM No. E 18786 Exp. 6/30/27 ELECTRICAL STATE OF CALIFORNIA

Z:\Drafting\Jobs\RSES\2024\02\Project\Washington High School\5613 Washington Union HS - Student Services Bldg\24.10.dwg DATE: 04/23/25 BY: Karen DATE PLOTTED: 04/24/25 BY: Karen JOB # 25-008-SE

VOLTAGE DROP CALCULATIONS (OHMS LAW)

VOLTAGE DROP = $2\left(\frac{\text{DC RESISTANCE AT 75°C FROM TABLE 8, C.E.C.}}{1000}\right)\left(\frac{\text{LENGTH OF CIRCUIT}}{1000}\right)\left(\text{CURRENT}\right)$

PERCENT VOLTAGE DROP = $\frac{\text{VOLTAGE DROP}}{\text{NOMINAL VOLTAGE}} \times 100$

1. NOTIFICATION APPLIANCE CIRCUIT "N1":

V 15 : 1 x 0.043 A = 0.043 A

SV 15 : 12 x 0.041 A = 0.492 A

0.535 A

VOLTAGE DROP = 2(3.14) $\left(\frac{235}{1000}\right)$ (0.535) = 0.79 V.D.

PERCENT VOLTAGE DROP = $\frac{0.79}{24} \times 100 = 3.3\ \%$

2. NOTIFICATION APPLIANCE CIRCUIT "N2":

V 15 : 1 x 0.041 A = 0.041 A

V 30 : 1 x 0.063 A = 0.063 A

V 15 : 3 x 0.041 A = 0.123 A

SV 15 : 1 x 0.043 A = 0.043 A

SV 30 : 1 x 0.063 A = 0.063 A

SV 15 : 8 x 0.041 A = 0.328 A

SV 75 : 1 x 0.111 A = 0.111 A

0.772 A

VOLTAGE DROP = 2(1.98) $\left(\frac{320}{1000}\right)$ (0.772) = 0.98 V.D.

PERCENT VOLTAGE DROP = $\frac{0.98}{24} \times 100 = 4.1\ \%$

3. NOTIFICATION APPLIANCE CIRCUIT "N3":

V 15 : 3 x 0.043 A = 0.129 A

V 15 : 2 x 0.041 A = 0.082 A

SV 15 : 10 x 0.041 A = 0.410 A

0.621 A

VOLTAGE DROP = 2(1.98) $\left(\frac{335}{1000}\right)$ (0.621) = 0.82 V.D.

PERCENT VOLTAGE DROP = $\frac{0.82}{24} \times 100 = 3.4\ \%$

NEW FIRE ALARM TRANSPONDER "F.A.T.-SS" BATTERY CALCULATION

DESCRIPTION	QUANTITY	SUPV. CURRENT EACH	SUPV. CURRENT SUB-TOTAL	ALARM CURRENT EACH	ALARM CURRENT SUB-TOTAL
FIRE ALARM CONTROL BOARD	1	0.15000	0.15000	0.15000	0.15000
POWER SUPPLY PM-9	1	0.050	0.05000	0.050	0.05000
AM-50 AMPLIFIER	1	0.086	0.08600	2.206	2.20600
SMOKE DETECTORS	59	0.00030	0.01770	0.00650	0.38350
PULL STATION	1	0.00030	0.00030	0.00150	0.00150
DUAL MONITOR MODULE	2	0.00750	0.01500	0.00570	0.01140
TOTALS			0.319		2.802

TOTAL ALARM CURRENT OF 2.802 x 0.250 (15 MINUTES) = 0.701 A.H.
TOTAL SUPERVISORY CURRENT OF 0.319 x 24 HOURS = 7.656 A.H.
TOTAL AMP HOURS REQUIRED 8.357 A.H.
x 1.25 SAFETY FACTOR
10.446 A.H.

PROVIDE 18.0 AMP HOUR BATTERIES

FIRE ALARM POWER EXPANDER PANEL "P.E.P. - SS" BATTERY CALCULATION

	DESCRIPTION	QUANTITY	SUPV. CURRENT EACH	SUPV. CURRENT SUB-TOTAL	ALARM CURRENT EACH	ALARM CURRENT SUB-TOTAL
	EXPANDER PANEL	1	0.03000	0.03000	0.15000	0.15000
	SUPV. CONTROL MODULE	1	0.00375	0.00375	0.00650	0.00650
	15cd STROBE (CEILING)	5	—	—	0.04100	0.20500
(A)	SPEAKER/15cd STROBE (CEILING)	31	—	—	0.04100	1.27100
(A)	SPEAKER/15cd STROBE (CEILING)	1	—	—	0.11100	0.11100
	15cd STROBE (WALL)	5	—	—	0.04300	0.21500
	30cd STROBE (WALL)	1	—	—	0.06300	0.06300
(A)	SPEAKER/30cd STROBE (WALL)	1	—	—	0.06300	0.06300
	TOTALS			0.034		2.085

TOTAL ALARM CURRENT OF 2.085 x 0.250 (15 MINUTES) = 0.521 A.H.
TOTAL SUPERVISORY CURRENT OF 0.034 x 24 HOURS = 0.816 A.H.
TOTAL AMP HOURS REQUIRED 1.337 A.H.
x 1.25 SAFETY FACTOR
1.671 A.H.

PROVIDE 7.0 AMP HOUR BATTERIES

(A) THE CURRENT VALUES LISTED ARE FOR THE STROBES ONLY. THE SPEAKER CURRENT IS INCLUDED IN THE VALUES LISTED UNDER THE DIGITAL AMPLIFIER.

FIRE ALARM SYSTEM EQUIPMENT SPECIFICATIONS

	SYMBOL	DESCRIPTION	MANUF./MODEL #	CSFM LISTING #	BACKBOX REQUIREMENTS (C)	MOUNTING HEIGHT (TO CENTER U.O.N.)
	FACP E	(E) FIRE ALARM CONTROL PANEL "F.A.C.P." (E) INTELLIGENT LOOP INTERFACE - MAIN BOARD (E) INTELLIGENT LOOP INTERFACE - EXPANSION BOARD (E) LCD DISPLAY (E) VOICE GATEWAY (E) ADAPTER PLATE FOR VOICE GATEWAY (E) POWER SUPPLY (E) DIGITAL ALARM COMMUNICATOR/TRANSMITTER (E) ENCLOSURE WITH PLEXI-GLASS DOOR (E) INNER DOOR (E) MOUNTING PLATE	GAMEWELL/F.C.I. #IL195-MB-E3 #IL195-S-E3 #LCD-E3 #1100-1323 #900375 #PM-9 #DACT-E3 #E398-RDWCC #E3ID2-D #E3-NCC-DPLATE	7165-1703:0125	EXISTING	EXISTING
	FAT	FIRE ALARM TRANSPONDER PANEL	GAMEWELL/F.C.I. #LI-E3	7165-1703:0125	INCLUDED	+60" PER DETAIL #5/E5.03
	PEP	FIRE ALARM POWER EXPANDER PANEL	GAMEWELL/F.C.I. #HPFF8	7315-1637:0102	INCLUDED	+60" PER DETAIL #3/E5.03
	F	ADDRESSABLE MANUAL PULL STATION	GAMEWELL/F.C.I. #MS-7AF	7150-1703:0119	4" SQ. x 2 1/8" DP. OUTLET BOX WITH SINGLE-GANG RAISED RING	PER DETAIL #1/E5.03
	SD	ADDRESSABLE PHOTOELECTRIC SMOKE DETECTOR	GAMEWELL/F.C.I. #ASD-PL2F #B210LP	7272-1703:0121 7300-1653:0109	3.5" OCTAGON BOX OR 4" OCTAGON BOX	PER DETAIL #1/E5.03
	IM	ISOLATOR MODULE	GAMEWELL/F.C.I. #MSOCX	7300-1653:0103	4" SQ. x 2 1/8" DP. OUTLET BOX	———
	MM	ADDRESSABLE MONITOR MODULE	GAMEWELL/F.C.I. #AMM-4F	7300-1703:0102	4" SQ. x 2 1/8" DP. OUTLET BOX	———
	DMM	ADDRESSABLE DUAL MONITOR MODULE	GAMEWELL/F.C.I. #AMM-2IF	7300-1703:0107	4" SQ. x 2 1/8" DP. OUTLET BOX	———
	RM	ADDRESSABLE RELAY MODULE	GAMEWELL/F.C.I. #ACM-2RF	7300-1703:0102	4" SQ. x 2 1/8" DP. OUTLET BOX	———
	SCM	ADDRESSABLE SUPERVISED CONTROL MODULE	GAMEWELL/F.C.I. #ACM-2SF	7300-1703:0102	4" SQ. x 2 1/8" DP. OUTLET BOX	———
	V 15 30	VISUAL STROBE, WALL MOUNTED (CANDELA RATING AS NOTED)	SYSTEM SENSOR #SRL	7125-1653:0504	4" SQ. x 2 1/8" DP. OUTLET BOX	PER DETAIL #1/E5.03
	SV 30	SPEAKER/STROBE, WALL MOUNTED (CANDELA RATING AS NOTED)	SYSTEM SENSOR #SPSRL	7320-1653:0505	4" SQ. x 2 1/8" DP. OUTLET BOX WITH 1 1/2" DP. BOX EXTENSION	PER DETAIL #1/E5.03
	V 15	VISUAL STROBE, CEILING MOUNTED (CANDELA RATING AS NOTED)	SYSTEM SENSOR #SCRL	7125-1653:0504	4" SQ. x 2 1/8" DP. OUTLET BOX	PER DETAIL #1/E5.03
	SV 15 75	SPEAKER/STROBE, CEILING MOUNTED (CANDELA RATING AS NOTED)	SYSTEM SENSOR #SPSCRL	7320-1653:0505	4" SQ. x 2 1/8" DP. OUTLET BOX WITH 1 1/2" DP. BOX EXTENSION	PER DETAIL #1/E5.03
	SP W.P.	EXTERIOR SPEAKER, WALL MOUNTED	SYSTEM SENSOR #SPRK-R/#WWBB	7320-1653:0201	4" SQ. x 2 1/8" DP. OUTLET BOX WITH 1 1/2" DP. BOX EXTENSION	———
(A) (B)	E.O.L.	END OF LINE RESISTOR	———	———	———	———
(D)	DD	ADDRESSABLE DUCT SMOKE DETECTOR WITH ADDRESSABLE RELAY MODULE	GAMEWELL/F.C.I. #DNR #ASD-PL2FR #ACM-2RF	3242-1653:0209 7272-1703:0121 7300-1703:0102	INCLUDED	———
	WF	WATERFLOW SWITCH (AT FIRE SPRINKLER RISER)	PROVIDED BY OTHERS	———	———	VERIFY EXACT LOCATION WITH FIRE SPRINKLER CONTR.
	TS	TAMPER SWITCH (AT POST INDICATOR VALVE OR BACKFLOW PREVENTER)	PROVIDED BY OTHERS	———	———	VERIFY EXACT LOCATION WITH FIRE SPRINKLER CONTR.
	B	ELECTRIC BELL (FOR FIRE SPRINKLER RISER)	PROVIDED BY OTHERS	———	4" SQ. x 2 1/8" DP. OUTLET BOX	VERIFY EXACT LOCATION WITH FIRE SPRINKLER CONTR.
	'FA' CABLE	ADDRESSABLE FIRE ALARM CABLE (INDOOR)	WEST PENN #D990	7161-0859:0101	———	———
	'SFA' CABLE	ADDRESSABLE FIRE ALARM CABLE (OUTDOOR)	WEST PENN #AQ225	7161-0859:0101	———	———
	'FSP' CABLE	VOICE EVACUATION SPEAKER CABLE (INDOOR)	WEST PENN #980-BLUE	7161-0859:0101	———	———
	'SFSP' CABLE	VOICE EVACUATION SPEAKER CABLE (OUTDOOR)	WEST PENN #AQC224	7161-0859:0101	———	———
	'SFN' CABLE	FIBER OPTIC NETWORK CABLE	BERK-TEK #LTR006AB0403	———	———	———

NOTES (FIRE ALARM SYSTEM EQUIPMENT SPECIFICATIONS):

(A) END OF LINE RESISTORS FOR NOTIFICATION APPLIANCE CIRCUITS SHALL BE 3.9K OHM, 1/2 WATT.

(B) END OF LINE RESISTORS FOR CONVENTIONAL DEVICES CONNECTED TO ADDRESSABLE MONITOR MODULE DEVICES AND/OR ADDRESSABLE CONTROL MODULES SHALL BE 3.9K OHM, 1/2 WATT.

(C) VERIFY BACKBOX REQUIREMENTS WITH FIRE ALARM SYSTEM EQUIPMENT SUPPLIER PRIOR TO ROUGH-IN.

(D) MAKE ARRANGEMENT WITH MECHANICAL CONTRACTOR TO INSTALL.

FIRE ALARM LEVEL OF AUDIBILITY

ALARM INDICATING DEVICES OF A FIRE ALARM SYSTEM INTENDED TO ALERT ALL OCCUPANTS SHALL BE SO LOCATED AND UNOBSTRUCTED AS TO CAUSE A LEVEL OF AUDIBILITY OF NOT LESS THAN 15db ABOVE AMBIENT NOISE LEVELS MEASURED FOUR FEET ABOVE THE FLOOR INSIDE BUILDING.

AMBIENT NOISE LEVELS SHALL BE CONSTRUED TO MEAN THAT WHICH CAN NORMALLY BE EXPECTED TO EXIST WHEN THE FACILITY, BUILDING, ROOM OR AREA IS FUNCTIONING UNDER NORMAL OPERATIVE OR WORKING CONDITIONS.

THE FIRE ALARM SIGNAL SHALL COMPLY WITH THE CALIFORNIA EDUCATION CODE, SECTIONS 32000 AND 32004, AND BE A TEMPORAL PATTERN, CODE 3 AND THEN FOLLOWED BY ANY VOICE MESSAGES.

SCHOOLS FIRE ALARM REQUIREMENTS

THE FIRE ALARM SYSTEM SHALL CONFORM TO CALIFORNIA BUILDING CODE, SECTION 907.2.3; CALIFORNIA ELECTRICAL CODE, ARTICLE 760 AND CALIFORNIA FIRE CODE, SECTION 907.2.3.

UPON COMPLETION OF THE INSTALLATION OF THE FIRE PROTECTIVE SIGNALING EQUIPMENT, A SATISFACTORY TEST OF THE ENTIRE SYSTEM SHALL BE MADE IN THE PRESENCE OF THE ENFORCING FIRE AGENCY, NFPA 72. IF TESTING RESULTS DETERMINE FIRE ALARM AUDIBILITY DOES NOT MEET 15db OVER AMBIENT NOISE LEVELS, ADDITIONAL FIRE ALARM SIGNALING DEVICES MAY BE REQUIRED BY THE ENFORCING FIRE AGENCY.

FIRE ALARM SYSTEM CERTIFICATION AND DESCRIPTION SHALL BE PROVIDED FOR TESTING AND A PLASTIC LAMINATED COPY SHALL REMAIN (WITH INSTRUCTIONS) AT THE FIRE ALARM CONTROL PANEL PER NFPA 72.

THE FIRE ALARM "CERTIFICATE OF COMPLETION" FORM IN NFPA 72 SHALL BE COMPLETED, SIGNED AND SUBMITTED.

SCOPE OF WORK

1. PROVIDE A NEW AUTOMATIC FIRE ALARM SYSTEM WITH SUPPLEMENTAL MANUAL FIRE DETECTION.
2. PROVIDE A FIRE ALARM POWER EXPANDER PANEL, ADDRESSABLE INITIATION DEVICES, NOTIFICATION APPLIANCES, CONDUIT, CABLING AND CONDUCTORS AS SHOWN ON THE DRAWINGS.

FIRE ALARM MONITORING NOTE

AUTOMATIC FIRE ALARM SYSTEMS SHALL TRANSMIT THE ALARM, SUPERVISORY AND TROUBLE SIGNALS TO AN APPROVED SUPERVISING STATION IN ACCORDANCE WITH NFPA 72. THE SUPERVISING STATION SHALL BE LISTED AS EITHER UL/FX (CENTRAL STATION) OR UL/US (REMOTE AND PROPRIETARY) BY UNDERWRITERS LABORATORY (UL) OR SHALL COMPLY WITH THE REQUIREMENTS OF STANDARD PM 3011. SUPERVISION OF SYSTEM AND LEASED TELEPHONE LINES SHALL BE ARRANGED BY OWNER.

FIRE ALARM RECORD DOCUMENTS CABINET NFPA 72, 7.7.2

- EVERY NEW FIRE ALARM SYSTEM SHALL PROVIDE A DOCUMENTATION CABINET, INSTALLED AT THE SYSTEM CONTROL PANEL OR OTHER APPROVED LOCATION.
- THE DOCUMENTATION CABINET SHALL BE PROMINENTLY LABELED, "SYSTEM RECORD DOCUMENTS".
- ALL RECORD AND TESTING DOCUMENTATION SHALL BE STORED IN THE CABINET.
- CONTENTS SHALL BE ACCESSIBLE BY AUTHORIZED PERSONNEL ONLY.
- WHERE CABINET IS INSTALLED IN A LOCATION OTHER THAN THE SYSTEM CONTROL UNIT, ITS LOCATION SHALL BE IDENTIFIED AT THE SYSTEM CONTROL UNIT.

SYSTEM DOCUMENTS AS APPLICABLE:

- RECORD DRAWINGS/AS-BUILTS.
- EQUIPMENT CUT SHEETS AND CA SFM LISTINGS.
- ALTERNATIVE MEANS AND METHODS.
- PERFORMANCE BASED DESIGN DOCUMENTATION (NFPA 72, 7.3.7).
- SYSTEM RECORD OF COMPLETION AND ANY SUPPLEMENTAL INSPECTION AND TESTING DOCUMENTATION (NFPA 72, 7.8.2).
- EMERGENCY RESPONSE PLAN (NFPA 72, 7.3.8.).
- EVALUATION DOCUMENTATION (NFPA 72, 7.3.9.).
- RISK ANALYSIS DOCUMENTATION (NFPA 72, 7.3.6).
- SOFTWARE AND FIRMWARE CONTROL DOCUMENTATION (NFPA 72, 23.2.2).

AUTOMATIC FIRE SPRINKLER SYSTEM

ALL BUILDINGS HAVE AN AUTOMATIC FIRE SPRINKLER SYSTEM. HEAT DETECTORS HAVE BEEN OMITTED, IN CONCEALED ATTIC SPACES ABOVE CEILINGS AND SOFFITS, DUE TO THE AUTOMATIC FIRE SPRINKLER SYSTEM IS FULLY EQUIPPED IN THESE AREAS. C.F.C. 907.2.3.6.2.

COMPLETE AUTOMATIC FIRE ALARM SYSTEM PLAN SUBMITTAL

THE FIRE ALARM SYSTEM SHOWN ON THESE PLANS HAS BEEN SUBMITTED AND APPROVED BY THE DIVISION OF THE STATE ARCHITECT. ANY SUBSTITUTION OF THE FIRE ALARM SYSTEM SHALL BE RESUBMITTED TO THE ARCHITECT FOR REVIEW AND APPROVAL. THE CONTRACTOR SHALL PAY ANY ADDITIONAL FEES THAT ARE INCURRED DUE TO THIS SUBSTITUTION.

THE FIRE ALARM SYSTEM SHALL BE A TOTAL (COMPLETE) AUTOMATIC HEAT AND SMOKE DETECTION SYSTEM, PER C.F.C. SECTION 907.2.3.6, AND SHALL COVER EVERY ROOM AND/OR AREA. UPON THE ACTIVATION OF ANY INITIATION DEVICE THE FIRE ALARM SYSTEM SHALL ALERT ALL OCCUPANTS AND TRANSMIT THE ALARM, SUPERVISORY, AND TROUBLE SIGNALS TO AN APPROVED SUPERVISING STATION (C.F.C. SECTION 907.2.3.5).

Rose Sing Eastham & Associates
Electrical Consultants
131 S. Dunworth – (559)733-2671
Visalia, California 93292-6705

REGISTERED PROFESSIONAL ENGINEER — ROSE SING KIRKPATRICK EASTHAM — No. E-18786 Exp. 6/30/27 — ELECTRICAL — STATE OF CALIFORNIA

IDENTIFICATION STAMP
DIV. OF THE STATE ARCHITECT
APP: 02-123307 INC:
REVIEWED FOR
SS ☑ FLS ☑ ACS ☑
DATE: 10/15/2025

Owner:

WASHINGTON UNIFIED SCHOOL DISTRICT
6041 SOUTH ELM AVE.
FRESNO, CA 93706

Project Name:

STUDENT SERVICES

Project Address:

WASHINGTON UNION HIGH SCHOOL
6041 SOUTH ELM AVE,
Fresno, CA 93706

integrated designs
by SOMAM, Inc.

ARCHITECTURE ENGINEERING INTERIOR DESIGN

6011 N. FRESNO STREET, SUITE 130
FRESNO CALIFORNIA 93710
P:(559) 436-0881 F:(559) 436-0887
E: design@somam.com
integrateddesigns.com

Ownership of Documents
This document, the ideas and designs incorporated herein, as an instrument of Professional Service is the property of Integrated Designs by SOMAM Inc. and is not to be used, in whole or in part for any other project without written authorization.
© COPYRIGHT 2020

Stamp:

Sheet Title:

FIRE ALARM SYSTEM EQUIP SPEC'S, CODES AND NOTES

Job No.: **5613**

Sheet No.: **E5.01**

Release: DSA Issue Date: 04-23-25

1" = 50'-0" 150 100 50 0 50
1" = 40'-0" 120 80 40 0 40
1" = 30'-0" 90 60 30 0 30
1" = 20'-0" 60 40 20 0 20
1/8" = 1'-0" 24 16 8 0 8
1/4" = 1'-0" 12 8 4 0 4
Z:\Drafting\Jobs\RSE\5XXX\5613\Fresno\Washington High School\5613 Washington Union HS - Student Services Bldg\E5.01.dwg DATE: 10/15/25 BY: Karen DATE PLOTTED: 10/15/25 JOB # 25-108-SE

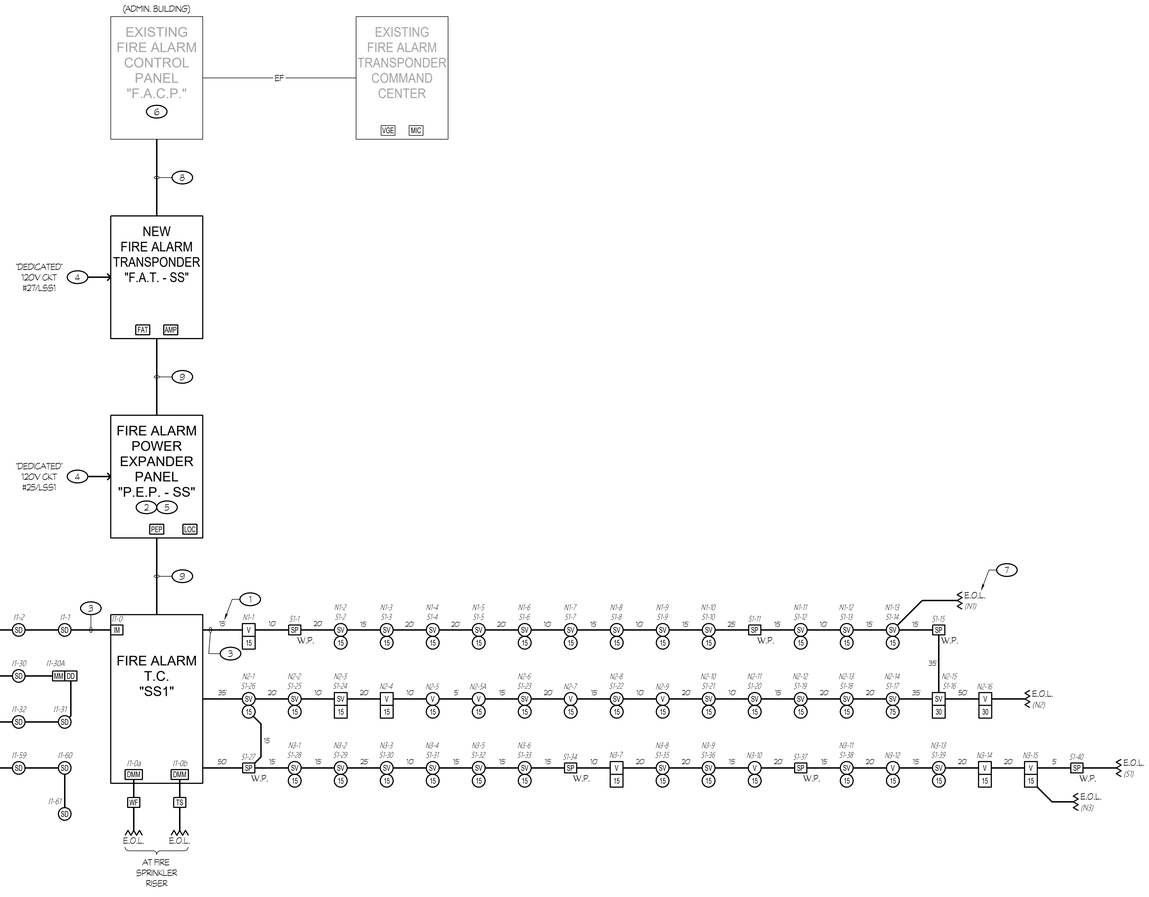

1 FIRE ALARM RISER DIAGRAM

NTS

NOTES (THIS SHEET ONLY):

1. LENGTHS INDICATED WERE USED FOR CALCULATIONS/DESIGN PURPOSES ONLY AND BASED UPON THE 'DIAGRAMMATIC' LAYOUT SHOWN ON THE DRAWINGS. LENGTHS SHALL NOT BE USED FOR BIDDING.
2. PROVIDE A COPY OF THE BATTERY CALCULATION FOR THE 'RESPECTIVE' POWER EXPANDER PANEL (OR THE FIRE ALARM CONTROL PANEL "F.A.C.P."). THE BATTERY CALCULATION SHALL CONTAIN INFORMATION (AS NOTED ON THESE PLANS) AND BE PLASTIC LAMINATED. MOUNT ONTO INSIDE FACE OF PANEL.
3. REFER TO RESPECTIVE FIRE ALARM PLAN FOR CONDUIT AND CABLING/ CONDUCTOR REQUIREMENTS, TYPICAL.
4. CIRCUIT BREAKER SHALL BE EQUIPPED WITH A LOCK-ON ACCESSORY. PROVIDE AN ENGRAVED NAMEPLATE: "FIRE ALARM - LEAVE ON". NAMEPLATE SHALL HAVE WHITE LETTERS ON A RED BACKGROUND. PAINT LOCK-ON ACCESSORY 'RED' IN COLOR.
5. PROVIDE 'END OF LINE' RESISTORS AT ANY UNUSED OUTPUTS.
6. PROVIDE PROGRAMMING FOR NEW DEVICES AND VOICE EVACUATION SYSTEM AS REQUIRED.
7. DENOTES END OF LINE RESISTOR ON NOTIFICATION APPLIANCE CIRCUIT. RESISTORS SUPPLIED WITH CONTROL/EXPANDER PANELS AS REQUIRED. LOCATE RESISTORS AT END OF LINE APPLIANCES (CLASS 'B' WIRING), TYPICAL.
8. PROVIDE FIRE ALARM FIBER OPTIC CABLING AND CONNECT TO EXISTING FIRE ALARM CONTROL PANEL IN ADMIN BUILDING 'UNIT M'.
9. PROVIDE SLC AND SPEAKER ZONE CABLING AS REQUIRED.

AUTOMATIC FIRE SPRINKLER SYSTEM

ALL BUILDINGS HAVE AN AUTOMATIC FIRE SPRINKLER SYSTEM. HEAT DETECTORS HAVE BEEN OMITTED, IN CONCEALED ATTIC SPACES ABOVE CEILINGS AND SOFFITS, DUE TO THE AUTOMATIC FIRE SPRINKLER SYSTEM IS FULLY EQUIPPED IN THESE AREAS. C.F.C. 907.2.3.6.2.

COMPLETE AUTOMATIC FIRE ALARM SYSTEM PLAN SUBMITTAL

THE FIRE ALARM SYSTEM SHOWN ON THESE PLANS HAS BEEN SUBMITTED AND APPROVED BY THE DIVISION OF THE STATE ARCHITECT. ANY SUBSTITUTION OF THE FIRE ALARM SYSTEM SHALL BE RESUBMITTED TO THE ARCHITECT FOR REVIEW AND APPROVAL. THE CONTRACTOR SHALL PAY ANY ADDITIONAL FEES THAT ARE INCURRED DUE TO THIS SUBSTITUTION.

THE FIRE ALARM SYSTEM SHALL BE A TOTAL (COMPLETE) AUTOMATIC HEAT AND SMOKE DETECTION SYSTEM, PER C.F.C. SECTION 907.2.3.6, AND SHALL COVER EVERY ROOM AND/OR AREA. UPON THE ACTIVATION OF ANY INITIATION DEVICE THE FIRE ALARM SYSTEM SHALL ALERT ALL OCCUPANTS AND TRANSMIT THE ALARM, SUPERVISORY, AND TROUBLE SIGNALS TO AN APPROVED SUPERVISING STATION (C.F.C. SECTION 907.2.3.5).

Rose Sing Eastham & Associates
Electrical Consultants
131 S. Dunworth – (559)733-2671
Visalia, California 93292-6705

REGISTERED PROFESSIONAL ENGINEER — No. E 18786 Exp. 6/30/27 — ELECTRICAL — STATE OF CALIFORNIA

IDENTIFICATION STAMP
DIV. OF THE STATE ARCHITECT
APP: 02-123307 INC:
REVIEWED FOR
SS ☑ FLS ☑ ACS ☑
DATE: 10/15/2025

Owner:

WASHINGTON UNIFIED SCHOOL DISTRICT
6041 SOUTH ELM AVE.
FRESNO, CA 93706

Project Name:

STUDENT SERVICES

Project Address:

WASHINGTON UNION HIGH SCHOOL
6041 SOUTH ELM AVE,
Fresno, CA 93706

integrated designs
by SOMAM, Inc.

ARCHITECTURE
ENGINEERING
INTERIOR DESIGN

6011 N. FRESNO STREET, SUITE 130
FRESNO CALIFORNIA 93710
P:(559) 436-0881 F:(559) 436-0887
E: design@somam.com
integrateddesigns.com

Ownership of Documents

This document, the ideas and designs incorporated herein, as an instrument of Professional Service is the property of Integrated Designs by SOMAM Inc. and is not to be used, in whole or in part for any other project without written authorization.

© COPYRIGHT 2020

Stamp:

Sheet Title:

FIRE ALARM SYSTEM RISER DIAGRAM

Job No.: **5613**

Sheet No.: **E5.02**

Release: DSA — Issue Date: 04-23-25

Z:\Drafting\Jobs\PDF\5XXX\5613 Washington High School\5613 Washington Union HS - Student Services Bldg\E5.02.dwg [DATE: 5/4/23, 09/19/25 Bh: Acem, DATE PLOTTED: 09/19/25 JOB # 25-088-SE

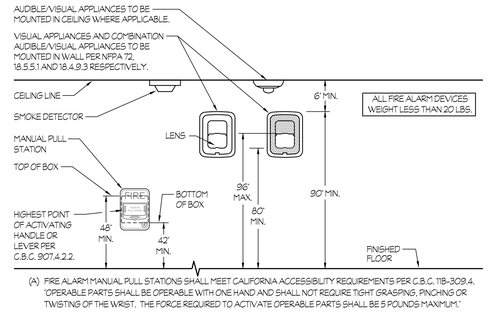

(A) FIRE ALARM MANUAL PULL STATIONS SHALL MEET CALIFORNIA ACCESSIBILITY REQUIREMENTS PER C.B.C. 11B-309.4. "OPERABLE PARTS SHALL BE OPERABLE WITH ONE HAND AND SHALL NOT REQUIRE TIGHT GRASPING, PINCHING OR TWISTING OF THE WRIST. THE FORCE REQUIRED TO ACTIVATE OPERABLE PARTS SHALL BE 5 POUNDS MAXIMUM."

1 FIRE ALARM DEVICES ELEVATION

NTS

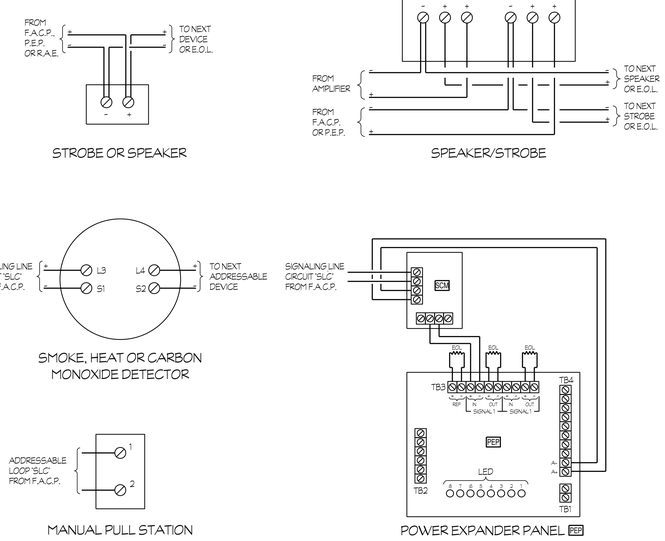

2 FIRE ALARM EQUIPMENT WIRING DIAGRAMS

NTS

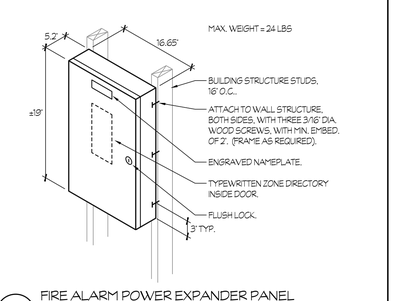

3 FIRE ALARM POWER EXPANDER PANEL "P.E.P - SS." MOUNTING

NTS

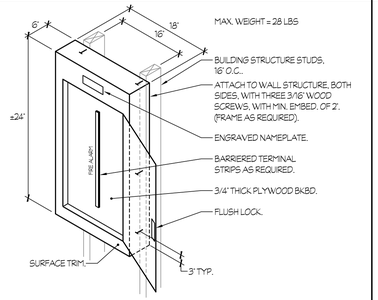

4 FIRE ALARM TERMINAL CABINET "F.A.T.C - SS" MOUNTING

NTS

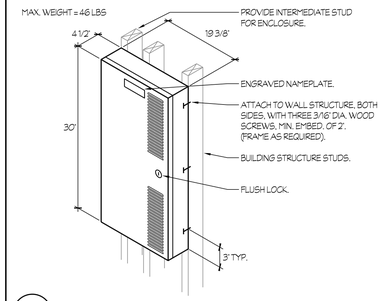

5 FIRE ALARM TRANSPONDER "F.A.T. - SS"

NTS

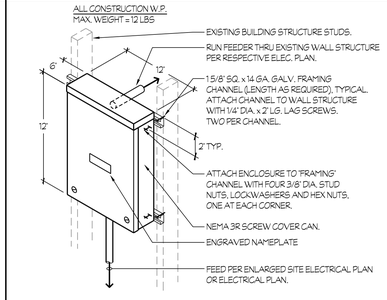

6 PULL CAN MOUNTING

NTS

FIRE ALARM SYSTEM SEQUENCE OF OPERATIONS

	RESULT OF OPERATION ⇩	TYPE OF INITIATION: MANUAL PULL STATION	AREA SMOKE/ HEAT DETECTOR (1)	DUCT DETECTOR	LOSS OF POWER	SHORT CIRCUIT/ GROUND FAULT	FIRE SPRINKLER RISER WATER FLOW SWITCH	TAMPER SWITCH AT FIRE DEPT. CONNECTION
	ANNUNCIATE ALARM AT FIRE ALARM CONTROL PANEL	YES	YES	YES	———	———	YES	———
	ANNUNCIATE TROUBLE AT FIRE ALARM CONTROL PANEL	———	———	———	YES	YES	———	———
	ANNUNCIATE SUPERVISORY AT FIRE ALARM CONTROL PANEL	———	———	———	———	———	———	YES
	ACTIVATE ALL AUDIBLE AND VISUAL ALARM SIGNALS	YES	YES	———	———	———	YES	———
	TRANSFER TO BATTERY BACK-UP	———	———	———	YES	———	———	———
	ACTIVATE TEMPORAL PATTERN, CODE 4.	———	———	———	———	———	———	———
	SHUTDOWN RESPECTIVE A/C UNIT	———	———	YES	———	———	———	———
(1)	CLOSE FIRE/SMOKE DAMPER	———	YES	———	YES	———	———	———
(2)	ANNUNCIATE SUPERVISORY AT THE REMOTE DISPLAY UNIT IN THE ADMINISTRATION BLDG. AND AT FIRE ALARM CONTROL PANEL	———	———	———	———	———	———	———
	ANNUNCIATE AT 24 HR. ATTENDED LOCATION	YES	YES	———	YES	YES	YES	YES
	CENTRAL STATION FOR MONITORING ('ALARM')	YES	YES	———	———	———	YES	———
	CENTRAL STATION FOR MONITORING ('TROUBLE')	———	———	———	YES	YES	———	———
	CENTRAL STATION FOR MONITORING ('SUPERVISORY')	———	———	———	———	———	———	YES

(1) THIS OPERATION SHALL BE ACCOMPLISHED BY UTILIZING THE TOTAL SMOKE COVERAGE SYSTEM TO ACTIVATE THE RESPECTIVE RELAY MODULE. THE CONTACTS SHALL BE PROGRAMMED TO 'OPEN', THUS DE-ENERGIZING THE 120V POWER TO THE ACTUATOR OF THE FIRE/SMOKE DAMPER OR 'OPENING' THE H.V.A.C. CONTROL CIRCUIT.

(2) UPON DETECTION OF CARBON MONOXIDE, A SUPERVISORY SIGNAL SHALL ANNUNCIATE AT BOTH THE FIRE ALARM CONTROL PANEL, 'F.A.C.P.' AND AT THE REMOTE DISPLAY UNIT, LOCATED IN THE ADMINISTRATION BUILDING.

SIGNALING LINE CIRCUIT SCHEDULE

CIRCUIT	DESCRIPTION/LOCATION	PANEL
/1	STUDENT SERVICES	'F.A.T. - SS'

NOTIFICATION APPLIANCE CIRCUIT SCHEDULE

CIRCUIT	DESCRIPTION/LOCATION	PANEL
N1	STUDENT SERVICES	'P.E.P. - SS'
N2	STUDENT SERVICES	'P.E.P. - SS'
N3	STUDENT SERVICES	'P.E.P. - SS'

SPEAKER CIRCUIT SCHEDULE

CIRCUIT	DESCRIPTION/LOCATION	PANEL
S1	STUDENT SERVICES	'P.E.P. - SS'

SPEAKER dB LOSS CALCULATION

SPEAKER CIRCUIT	SPEAKER VOLTAGE	WIRE SIZE	RESISTANCE PER FOOT	FEET REQUIRED ON CIRCUIT	WIRE RESISTANCE	TOTAL WATTAGE OF SPEAKERS ON CIRCUIT	SPEAKER CURRENT (AMPS)	RESISTANCE OF SPEAKER LOAD	WIRE SIZE	ACTUAL VOLTAGE AT SPEAKER LOAD	ACTUAL WATTS AT SPEAKER LOAD	dB LOSS
S1	70	18	0.01278	825	10.544	47	0.671	104.26	18	63.5710	38.7632	-0.84

NOTE:

CALCULATION IS BASED ON EACH OF THE 'INTERIOR' SPEAKERS TAPPED AT 1 WATT AND EACH OF THE 'EXTERIOR' SPEAKERS TAPPED AT 2 WATTS.

AUTOMATIC FIRE SPRINKLER SYSTEM

ALL BUILDINGS HAVE AN AUTOMATIC FIRE SPRINKLER SYSTEM. HEAT DETECTORS HAVE BEEN OMITTED, IN CONCEALED ATTIC SPACES ABOVE CEILINGS AND SOFFITS, DUE TO THE AUTOMATIC FIRE SPRINKLER SYSTEM IS FULLY EQUIPPED IN THESE AREAS. C.F.C. 907.2.3.6.2.

COMPLETE AUTOMATIC FIRE ALARM SYSTEM PLAN SUBMITTAL

THE FIRE ALARM SYSTEM SHOWN ON THESE PLANS HAS BEEN SUBMITTED AND APPROVED BY THE DIVISION OF THE STATE ARCHITECT. ANY SUBSTITUTION OF THE FIRE ALARM SYSTEM SHALL BE RESUBMITTED TO THE ARCHITECT FOR REVIEW AND APPROVAL. THE CONTRACTOR SHALL PAY ANY ADDITIONAL FEES THAT ARE INCURRED DUE TO THIS SUBSTITUTION.

THE FIRE ALARM SYSTEM SHALL BE A TOTAL (COMPLETE) AUTOMATIC HEAT AND SMOKE DETECTION SYSTEM, PER C.F.C. SECTION 907.2.3.6, AND SHALL COVER EVERY ROOM AND/OR AREA. UPON THE ACTIVATION OF ANY INITIATION DEVICE THE FIRE ALARM SYSTEM SHALL ALERT ALL OCCUPANTS AND TRANSMIT THE ALARM, SUPERVISORY, AND TROUBLE SIGNALS TO AN APPROVED SUPERVISING STATION (C.F.C. SECTION 907.2.3.5).

FIRE ALARM SYSTEM GENERAL NOTES

1. APPLICABLE STANDARD NFPA 72, AS ADOPTED AND AMENDED IN CBC CHAPTER 35.
2. INSTALLATION OF THE SYSTEMS SHALL NOT BE STARTED UNTIL DETAILED DESIGN DOCUMENTS AND SPECIFICATION, INCLUDING STATE FIRE MARSHAL LISTING NUMBERS FOR EACH COMPONENT OF THE SYSTEM, HAS BEEN APPROVED BY DSA.
3. UPON COMPLETION OF SYSTEM INSTALLATION, A SATISFACTORY TEST OF THE ENTIRE SYSTEM SHALL BE MADE IN THE PRESENCE OF A DSA PROJECT INSPECTOR TEST SHALL INCLUDE ALL INFORMATION PER NFPA 72 14.6.2.4 AND FIGURE 7.8.2(a) AND READ OUT VERIFICATION FORM FROM CENTER STATION.
4. A STAMPED SET OF APPROVED FIRE ALARM DESIGN DOCUMENTS SHALL BE ON THE JOB SITE AND USED FOR INSTALLATION.
5. ANY DISCREPANCIES BETWEEN THE DRAWINGS AND THE CODE OR RECOGNIZED STANDARDS SHALL BE BROUGHT TO THE ATTENTION OF DSA AND THE ARCHITECT/ ENGINEER OF THE PROJECT.
6. DSA, ARCHITECT/ENGINEER AND OWNER SHALL BE NOTIFIED A MINIMUM OF 48 HOURS PRIOR TO THE FINAL INSPECTION AND/OR TESTING.
7. ALL PENETRATIONS THROUGH RATED ASSEMBLIES REQUIRING OPENING PROTECTION SHALL BE PROVIDED WITH A PENETRATION FIRE STOP SYSTEM AS IDENTIFIED IN CBC CHAPTER 7, UL OR OTHER APPROVED LAB TESTING CRITERIA. APPROVED TYPES OF MATERIALS SHALL BE IDENTIFIED WITHIN THE PROJECT SPECIFICATIONS WITHIN THE FIRE ALARM SECTION.
8. WALL MOUNTED VISIBLE NOTIFICATION DEVICES SHALL HAVE THEIR BOTTOMS MOUNTED AT 80" MINIMUM AND THEIR TOPS AT 96" MAXIMUM FROM FINISHED FLOOR.
9. WALL MOUNTED AUDIBLE NOTIFICATION DEVICES SHALL HAVE THEIR TOPS MOUNTED AT 90" MINIMUM AND 100" MAXIMUM FROM FINISHED FLOOR AND NO CLOSER THAN 6" TO A HORIZONTAL STRUCTURE.
10. AUDIBLE DEVICES SHALL PROVIDE A SOUND PRESSURE LEVEL OF 15 DECIBELS (dBA) ABOVE THE AVERAGE AMBIENT SOUND LEVEL OR FIVE dBA ABOVE THE MAXIMUM SOUND LEVEL HAVING A DURATION OF AT LEAST 60 SECONDS, WHICHEVER IS GREATER, IN EVERY OCCUPIABLE SPACE WITHIN THE BUILDING.
11. AUDIBLE DEVICES SHALL BE SYNCHRONIZED TEMPORAL CODE 3 PATTERN FOR FIRE ALARM SIGNAL.
12. THE CONTRACTOR SHALL ADJUST/INSTALL ALL DEVICES TO MAXIMIZE PERFORMANCE AND TO MINIMIZE FALSE ALARMS.
13. VISIBLE DEVICES SHOULD NOT EXCEED TWO FLASHES PER SECOND AND SHOULD NOT BE SLOWER THAN ONE FLASH EVERY SECOND. THE DEVICE SHALL HAVE A PULSING LIGHT SOURCE NOT LESS THAN 15 CANDELA. VISIBLE DEVICES WITHIN 55' FROM EACH OTHER SHALL BE SYNCHRONIZED.
14. UNDERGROUND AND EXTERIOR CONDUITS TO HAVE WATER TIGHT FITTINGS AND WIRE TO BE APPROVED FOR WET LOCATIONS.
15. ALL FIRE ALARM WIRING SHALL BE FPL OR FPLP (FIRE POWER LIMITED OR FIRE POWER LIMITED PLENUM) AS REQUIRED FOR APPLICATION. WIRING IN CONDUIT ABOVE GROUND MAY BE TYPE THHN OR THWN.
16. PER CEC STANDARDS, ALL WIRING IS TO BE PULLED THROUGH EACH JUNCTION BOX AND CONNECTED DIRECTLY TO EACH FIRE DEVICE. DO NOT SPLICE THE WIRE. ALL BOXES TO BE SIZED PER CEC.
17. SMOKE DETECTORS SHALL NOT BE ANY CLOSER THAN 1' FROM FIRE SPRINKLERS OR 3' FROM ANY SUPPLY DIFFUSER. IN AREA OF CONSTRUCTION OR POSSIBLE DAMAGE/ CONTAMINATION ON NEWLY INSTALLED FIRE ALARM, DEVICES SHALL BE COVERED UNTIL THAT AREA IS READY TO BE TURNED OVER TO THE OWNER.
18. ALL FIRE ALARM CIRCUITS SHALL BE IN CONDUIT, SURFACE RACEWAY OR OPEN RUN ABOVE CEILING, UNDER FLOORS AND IN WALLS IN A NEAT AND PROTECTED MANNER AS INDICATED ON DESIGN DOCUMENTS. EXPOSED CIRCUITS ARE ONLY PERMITTED WHEN NOTED AS EXPOSED ON DESIGN DOCUMENTS.
19. FIRE ALARM PANEL, REMOTES, AND COMPONENTS SHALL BE SECURED TO MOUNTING SURFACES PER MANUFACTURERS SPECIFICATIONS. NO SINGLE DEVICE SHALL EXCEED 20 LBS. WITHOUT SPECIAL MOUNTING DETAILS.
20. A DEDICATED BRANCH CIRCUIT SHALL BE PROVIDED FOR FIRE ALARM EQUIPMENT. THIS CIRCUIT SHALL BE ENERGIZED FROM THE COMMON USE AREA PANEL AND SHALL HAVE NO OTHER OUTLETS. THE BREAKER SHALL HAVE A RED LOCKING DEVICE TO BLOCK THE HANDLE IN THE 'ON' POSITION. THE CIRCUIT BREAKER SHALL BE LABELED 'FIRE ALARM CIRCUIT CONTROL'. CIRCUIT ID TO BE LABELED AT FIRE PANELS/EXTENDERS.
21. THE INSTALLING CONTRACTOR SHALL PROVIDE A COMPLETED 'SYSTEM RECORD OF COMPLETION' PER NFPA 72, FIGURE 17.8.2.
22. NOT USED
23. MICROPHONES ASSOCIATED WITH EMERGENCY VOICE ALARM COMMUNICATION SYSTEMS (EVAC) SHALL BE ACCESSIBLE FOR USE, INSTALLED IN COMPLIANCE WITH CBC SECTIONS 11B-305 AND 11B-308.
24. THE INSTALLING CONTRACTOR SHALL PROVIDE SYSTEM PROGRAMMING FOR SUPERVISORY MONITORING PER CBC SECTION 907.6.2.
25. SUPERVISORY MONITORING SHALL BE TESTED AND VERIFIED AS SENDING CORRECT SIGNALS IN CONJUNCTION WITH FINAL ACCEPTANCE TEST.
26. OWNER SHALL BE RESPONSIBLE FOR ESTABLISHING A FIRE SYSTEM MONITORING CONTRACT OR PROVISIONS.
27. PROVIDE AN ENGRAVED NAMEPLATE INDICATING THE D.S.A. APPLICATION NUMBER, FILE NUMBER AND DATE OF INSTALLATION AT EACH FIRE ALARM CONTROL PANEL 'F.A.C.P.', AT EACH FIRE ALARM TRANSPONDER 'F.A.T.' AND AT EACH FIRE ALARM POWER EXPANDER PANEL 'P.E.P.':
    A. THE PRIMARY POWER SUPPLY TO EACH FIRE ALARM CONTROL PANEL 'F.A.C.P.', TO EACH FIRE ALARM TRANSPONDER 'F.A.T.' AND TO EACH FIRE ALARM POWER EXPANDER PANEL 'P.E.P.' SHALL BE IN ACCORDANCE WITH NFPA 72 10.6.5 AND AS FOLLOWS:
        a. THE CIRCUIT BREAKER FEEDING THE RESPECTIVE PANEL SHALL BE LOCATED IN A LOCKED ROOM OR BEHIND A LOCKABLE DOOR AND BE READILY ACCESSIBLE TO AUTHORIZED PERSONNEL ONLY.
        b. THE CIRCUIT BREAKER SHALL BE EQUIPPED WITH A LOCK-ON ACCESSORY. PAINT LOCK-ON ACCESSORY 'RED' IN COLOR.
        c. THE CIRCUIT BREAKER SHALL HAVE AN ENGRAVED NAMEPLATE THAT IDENTIFIES IT AS A 'FIRE ALARM CIRCUIT CONTROL'. THIS ENGRAVED NAMEPLATE SHALL HAVE WHITE LETTERS ON A RED BACKGROUND. MOUNT ONTO THE INTERIOR TRIM AND LOCATE ADJACENT TO CIRCUIT BREAKER WHERE POSSIBLE.
        d. THE LOCATION OF THE CIRCUIT DISCONNECTING MEANS SHALL BE PERMANENTLY IDENTIFIED AT EACH FIRE ALARM CONTROL PANEL 'F.A.C.P.', AT EACH FIRE ALARM TRANSPONDER 'F.A.T.' AND AT EACH FIRE ALARM POWER EXPANDER PANEL 'P.E.P.'. PROVIDE AN ENGRAVED NAMEPLATE (WHITE LETTERS ON A RED BACKGROUND) WHICH INDICATES THIS.
    B. ALL ENGRAVED NAMEPLATES SHALL BE ATTACHED TO THE FRONT OF THE RESPECTIVE ENCLOSURE WITH SCREWS OR RIVETS.
28. PROVIDE A COPY OF THE BATTERY CALCULATION AT EACH FIRE ALARM CONTROL PANEL 'F.A.C.P.', AT EACH FIRE ALARM TRANSPONDER 'F.A.T.' AND AT EACH FIRE ALARM POWER EXPANDER PANEL 'P.E.P.'. BATTERY CALCULATION SHALL CONTAIN INFORMATION AS NOTED ON SCHEDULES AND BE PLASTIC LAMINATED. MOUNT ONTO INSIDE FACE OF DOOR.
29. THE FIRE ALARM SYSTEM CONTRACTOR SHALL MAKE ARRANGEMENTS WITH THE SCHOOL DISTRICT'S CENTRAL STATION MONITORING COMPANY TO SEND A REPRESENTATIVE TO THE SITE TO ENSURE THAT COMMUNICATION TO THE CENTRAL STATION IS ESTABLISHED.
30. THE FIRE ALARM SYSTEM CONTRACTOR SHALL CONFIRM THE ACTUAL ROOM NAMES AND NUMBERS, BEING USED ON SITE, WITH THE SCHOOL DISTRICT PRIOR TO PROGRAMMING.

Rose Sing Eastham & Associates
Electrical Consultants
131 S. Dunworth – (559)733-2671
Visalia, California 93292-6705

REGISTERED PROFESSIONAL ENGINEER ROSE SING EASTHAM No. E-18786 Exp. 6/30/27 ELECTRICAL STATE OF CALIFORNIA

IDENTIFICATION STAMP
DIV. OF THE STATE ARCHITECT
APP: 02-123307 INC:
REVIEWED FOR
SS ☑ FLS ☑ ACS ☑
DATE: 10/15/2025

Owner:

WASHINGTON UNIFIED SCHOOL DISTRICT
6041 SOUTH ELM AVE.
FRESNO, CA 93706

Project Name:

STUDENT SERVICES

Project Address:

WASHINGTON UNION HIGH SCHOOL
6041 SOUTH ELM AVE,
Fresno, CA 93706

integrated designs
by SOMAM, Inc.

ARCHITECTURE ENGINEERING INTERIOR DESIGN

6011 N. FRESNO STREET, SUITE 130
FRESNO CALIFORNIA 93710
P:(559) 436-0881 F:(559) 436-0887
E: design@somam.com
integrateddesigns.com

Ownership of Documents
This document, the ideas and designs incorporated herein, as an instrument of Professional Service is the property of Integrated Designs by SOMAM Inc. and is not to be used, in whole or in part for any other project without written authorization.
© COPYRIGHT 2020

Stamp:

Sheet Title:

FIRE ALARM SYSTEM NOTES SCHED. AND DETAILS

Job No.: **5613**

Sheet No.: **E5.03**

Release: DSA Issue Date: 04-23-25

Z:\Drafting\Jobs\005_SCHOOLS\Fresno\Washington High School\5613 Washington Union HS - Student Services Bldg\E5.03.dwg DATE: 9:40:31 AM, 10/15/25 BY: Kevin PLOTTED: 09/19/25 ARB # 25-108-SE

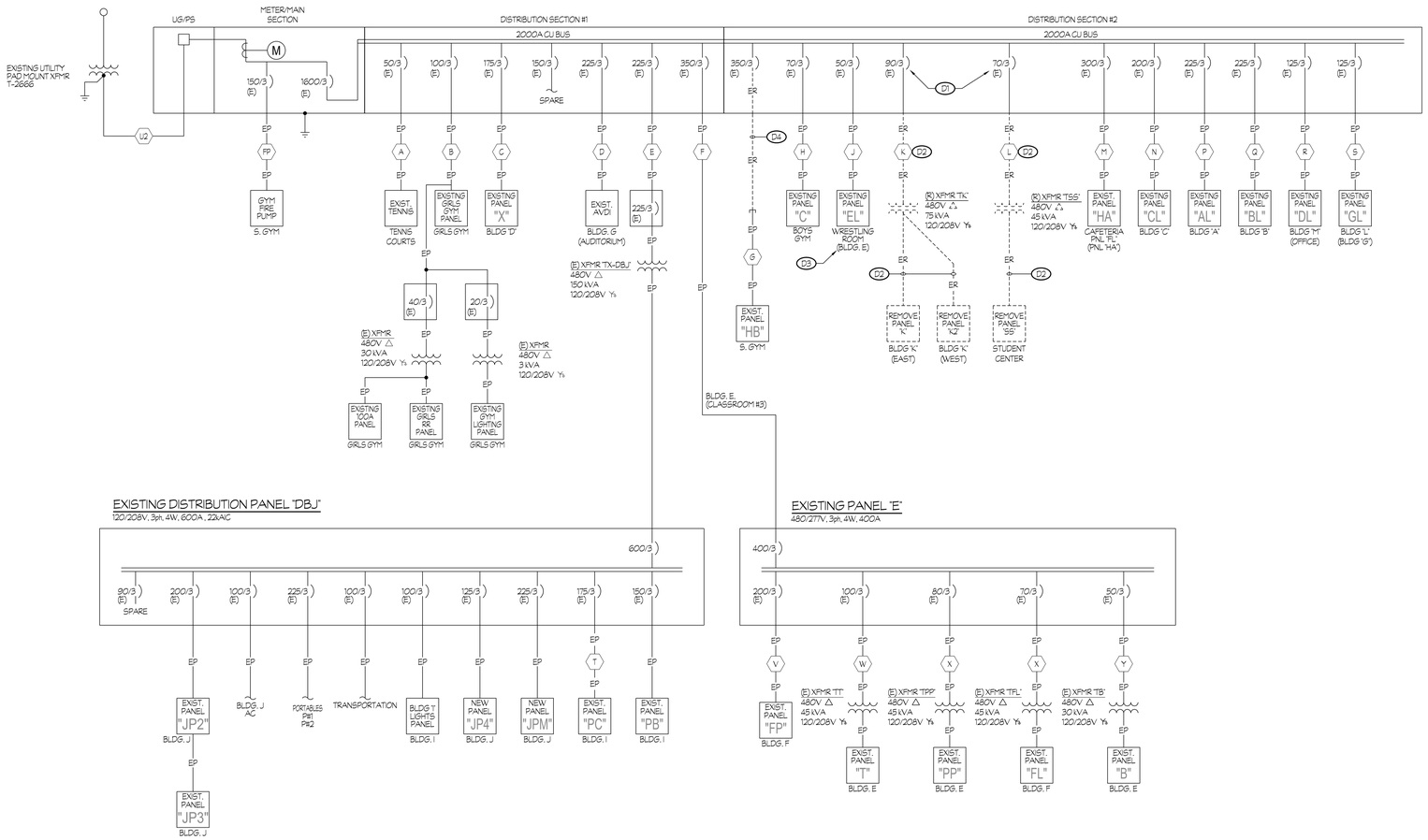

1 EXISTING ONE LINE DIAGRAM – DEMO

NTS

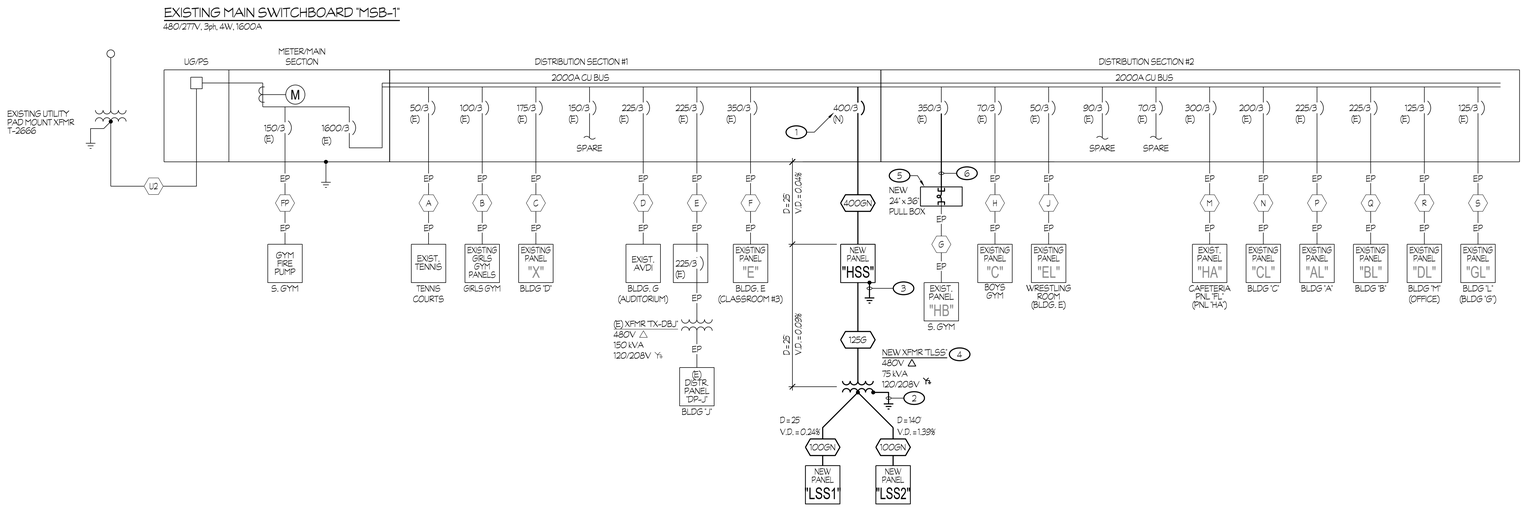

2 TEMPORARY ONE LINE DIAGRAM

NTS

DEMOLITION ONE LINE DIAGRAM NOTES (THIS SHEET ONLY):

- D1 REMOVE EXISTING CONDUCTORS FROM BREAKER AND PROVIDE NEW LABEL 'SPARE'.
- D2 REMOVE EXISTING CONDUCTORS AND CONDUIT.
- D3 PARENTHESIS SHOW EXISTING LABELS AT EXISTING MAIN SWITCHBOARD. SHOWN FOR REFERENCE ONLY.
- D4 REMOVE EXISTING SURFACE MOUNTED CONDUIT ALONG EXTERIOR OF BUILDING 'UNIT K'.

ONE LINE DIAGRAM NOTES (THIS SHEET ONLY):

1. PROVIDE A NEW CIRCUIT BREAKER, MATCHING EXISTING IN STYLE, TYPE, AND A.I.C. RATING.
2. BOND AND GROUND TRANSFORMER PER DETAIL #6/E7.03.
3. BOND AND GROUND REMOTE PANEL PER DETAIL #6/E7.03.
4. PROVIDE TRANSFORMER IDENTIFICATION NAMEPLATE PER DETAIL #14/E7.01.
5. INTERCEPT EXISTING CONDUIT WITH INGROUND PULL BOX FOR TEMPORARY CONNECTION.
6. PROVIDE TEMPORARY CONNECTION FROM EXISTING MAIN SWITCHBOARD 'MSB-1' TO NEW PULL BOX DURING DEMOLITION PHASE OF PROJECT, FOR FEEDS TO REMAIN ENERGIZED DURING CONSTRUCTION. FIELD VERIFY CONDUITS AND CONDUCTORS, EXPECTED TO BE (2) 3"C - 4 #250 kcmil& + 1 #1 GND, EACH.

EXISTING FEEDER SCHEDULE:

- U2 EXISTING 4"C (SECONDARY), TO BE VERIFIED WITH UTILITY. THREE SETS: 4"C - 3 #750 kcmil (AL) + 1 #350 (AL) GND, EACH.
- FP 1 1/4"C - 3 #4 + 1 #6 GND.
- A 1"C - 3 #6 + 1 #10 GND.
- B 2"C - 3 #1/0 (AL) + 1 #6 (AL) GND.
- C 2"C - 3 #4/0 (AL) + 1 #6 (AL) GND.
- D 2 1/2"C - 3 #300 kcmil (AL) + 1 #1 (AL) GND.
- E 2 1/2"C - 3 #300 kcmil (AL) + 1 #4 (AL) GND.
- F 3"C - 3 #600 kcmil (AL) + 1 #1 (AL) GND.
- G 2 SETS: 3"C - 4 #250 kcmil + 1 #1 GND, EACH.
- H 1 1/4"C - 3 #2 (AL)+ 1 #6 (AL) GND.
- J 1 1/2"C - 3 #6 + 1 #6 GND.
- K 2"C - 3 #2 (AL) + 1 #6 (AL) GND.
- L 2"C - _ #_ + 1 #_ GND.
- M 4"C - 4 #350 kcmil + 1 #2 GND.
- N 3"C - 3 #250 kcmil (AL) + 1 #1 (AL) GND.
- P 3"C - 3 #350 kcmil (AL) + 1 #1 (AL) GND.
- Q 3 1/2"C - 3 #250 kcmil (AL) + 1 #1 (AL) GND.
- R 2"C - 3 #2/0 (AL) + 1 #4 (AL) GND.
- S 2"C - 4 #2/0 (AL) + 1 #4 GND.
- T 2"C - 4 #2/0 (AL) + 1 #4 GND.
- V 2"C - 3 #4/0 + 1 #2/0 NUETRAL
- W 1 1/4"C - 3 #2
- X 1 1/4"C - 3 #4
- Y 3 #8 + 1 #12 GND. (BARE)

NEW FEEDER SCHEDULE:

(ALL UNDERGROUND CONDUCTORS, OF A 480/277V POWER SYSTEM, SHALL BE TYPE CU-XHHW-2. ALL OTHER CONDUCTORS, INCLUDING THE EQUIPMENT GROUNDING CONDUCTOR, SHALL BE CU-THWN-2 FOR #8 AWG OR LARGER AND CU-THWN FOR #10 AWG OR SMALLER).

- 100GN 1 1/2"C - 4 #2 + 1 #8 GND.
- 125G 1 1/2"C - 3 #2 + 1 #6 GND.
- 400GN 3 1/2"C - 4 #500 kcmil + 1 #2 GND.

Rose Sing Eastham & Associates
Electrical Consultants
131 S. Dunworth – (559)733-2671
Visalia, California 93292-6705

REGISTERED PROFESSIONAL ENGINEER ROSE SING KIRK EASTHAM No. E-18786 Exp. 6/30/27 ELECTRICAL STATE OF CALIFORNIA

IDENTIFICATION STAMP
DIV. OF THE STATE ARCHITECT
APP: 02-123307 INC:
REVIEWED FOR
SS ☑ FLS ☑ ACS ☑
DATE: 10/15/2025

Owner:
WASHINGTON UNIFIED SCHOOL DISTRICT

WASHINGTON UNIFIED SCHOOL DISTRICT
6041 SOUTH ELM AVE.
FRESNO, CA 93706

Project Name:
STUDENT SERVICES

Project Address:
WASHINGTON UNION HIGH SCHOOL
6041 SOUTH ELM AVE,
Fresno, CA 93706

integrated designs
by SOMAM, Inc.

ARCHITECTURE
ENGINEERING
INTERIOR DESIGN

6011 N. FRESNO STREET, SUITE 130
FRESNO CALIFORNIA 93710
P:(559) 436-0881 F:(559) 436-0887
E: design@somam.com
integrateddesigns.com

Ownership of Documents
This document, the ideas and designs incorporated herein, as an instrument of Professional Service is the property of Integrated Designs by SOMAM Inc. and is not to be used, in whole or in part for any other project without written authorization.
© COPYRIGHT 2020

Stamp:

Sheet Title:
ONE LINE DIAGRAMS

Job No.: 5613

Sheet No.: E6.01

Release: DSA Issue Date: 04-23-25

1" = 50'-0" 150 100 50 0 50
1" = 40'-0" 120 80 40 0 40
1" = 30'-0" 90 60 30 0 30
1" = 20'-0" 60 40 20 0 20
1/8" = 1'-0" 24 16 8 0 8
1/4" = 1'-0" 12 8 4 0 4

Z:\Drafting\Jobs\RDS\SCHOOLS\Fresno\Washington High School\5613 Washington Union HS - Student Services Bldg\5613.dwg DATE: 04/23/25 BY: Phoebe DATE PLOTTED: 09/19/25 JOB # 25-108-SE

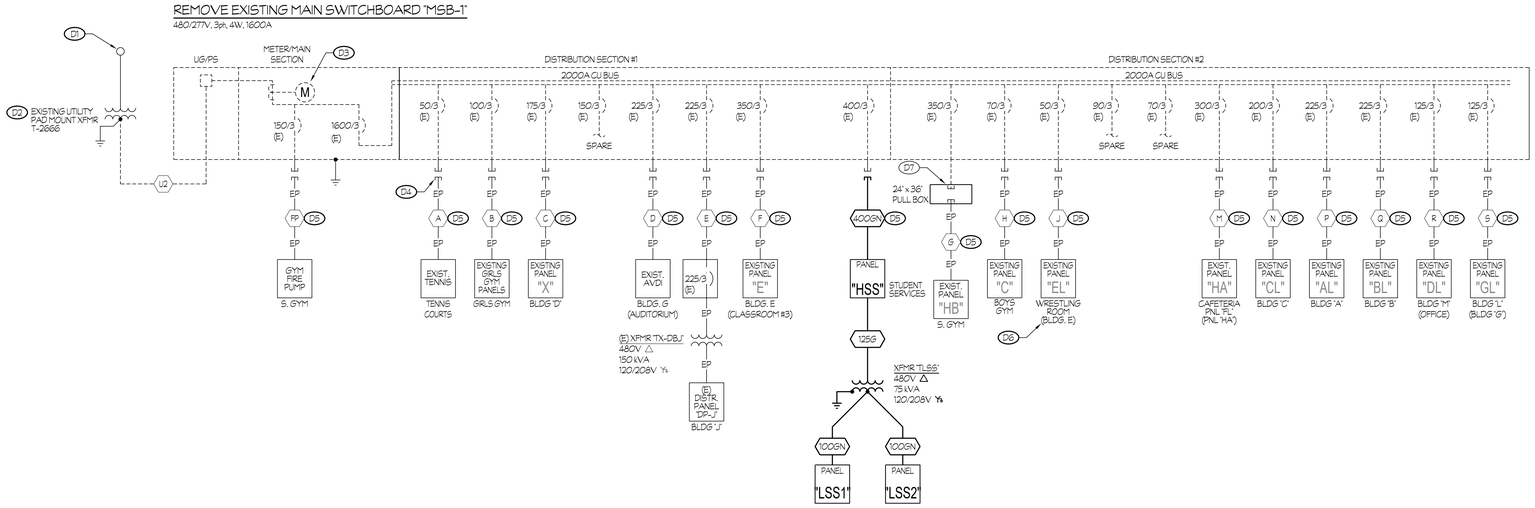

1 DEMOLITION ONE LINE DIAGRAM

NTS

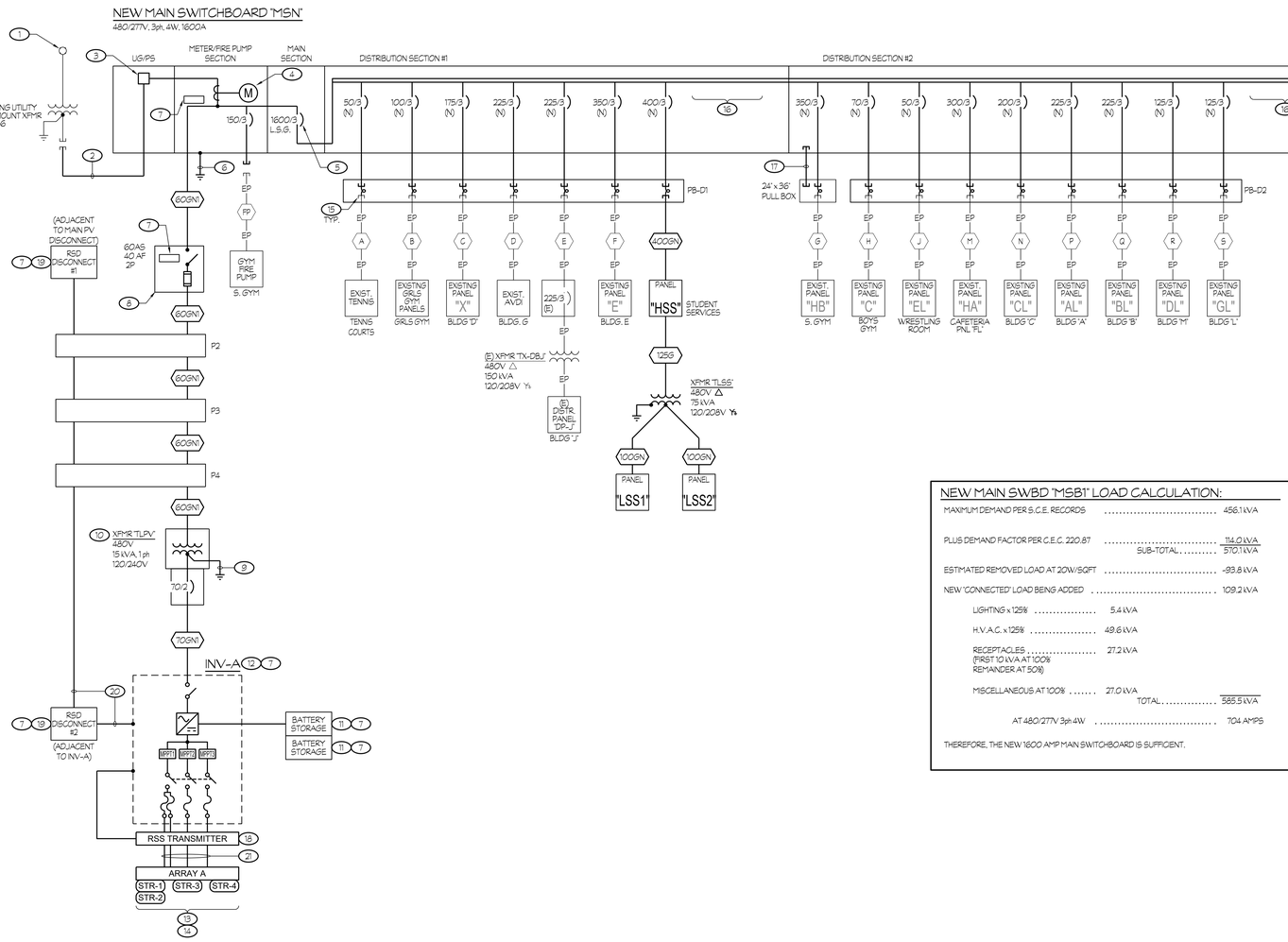

2 NEW ONE LINE DIAGRAM

NTS

NEW MAIN SWBD "MSB1" LOAD CALCULATION:

MAXIMUM DEMAND PER S.C.E. RECORDS		456.1 kVA
PLUS DEMAND FACTOR PER C.E.C. 220.87		114.0 kVA
	SUB-TOTAL	570.1 kVA
ESTIMATED REMOVED LOAD AT 20W/SQFT		-93.6 kVA
NEW 'CONNECTED' LOAD BEING ADDED		109.2 kVA
LIGHTING x 125%	5.4 kVA	
H.V.A.C. x 125%	49.6 kVA	
RECEPTACLES (FIRST 10 kVA AT 100% REMAINDER AT 50%)	27.2 kVA	
MISCELLANEOUS AT 100%	27.0 kVA	
	TOTAL	585.5 kVA
AT 480/277V 3ph 4W		704 AMPS

THEREFORE, THE NEW 1600 AMP MAIN SWITCHBOARD IS SUFFICIENT.

DEMOLITION ONE LINE DIAGRAM NOTES (THIS SHEET ONLY):

D1 EXISTING P.G.&E. POWER POLE. VERIFY EXACT LOCATION AND RISER QUADRANT WITH P.G.&E. PRIOR TO ROUGH-IN.

D2 EXISTING PAD MOUNT TRANSFORMER TO REMAIN. COORDINATE WITH S.C.E. FOR THE REMOVAL OF SECONDARY CONDUCTORS.

D3 COORDINATE WITH P.G.&E. TO DISCONNECT AND REMOVE EXISTING METER.

D4 DISCONNECT EXISTING CIRCUIT AND PREPARE FOR RECONNECTION TO NEW EQUIPMENT, TYPICAL AT EACH LOCATION.

D5 ALL EXISTING AND NEW CABLES ARE TO BE TESTED PER INDUSTRY STANDARDS FOR INSULATION INTEGRITY. REPORT TO BE PROVIDED BY 3RD PARTY TESTING COMPANY, TYPICAL FOR ALL EXISTING CABLES BEING RECONNECTED.

D6 PARENTHESIS SHOW EXISTING LABELS AT EXISTING MAIN SWITCHBOARD, SHOWN FOR REFERENCE ONLY.

D7 PULL BOX INSTALLED FOR TEMPORARY CONNECTION DURING THE DEMOLITION PHASE OF THE PROJECT.

ONE LINE DIAGRAM NOTES (THIS SHEET ONLY):

1 EXISTING P.G.&E. POWER POLE. VERIFY EXACT LOCATION AND RISER QUADRANT WITH P.G.&E. PRIOR TO ROUGH-IN.

2 P.G.&E. SECONDARY CONDUITS PER APPROVED UTILITY PLANS, EXPECTED TO BE THREE 4" CONDUITS.

3 PROVIDE LANDING LUGS PER P.G.&E. REQUIREMENTS.

4 PROVIDE METERING FACILITIES PER P.G.&E. REQUIREMENTS.

5 MAIN CIRCUIT BREAKER SHALL BE 100% RATED ELECTRONIC TYPE, EQUIPPED WITH LONG-TIME, SHORT-TIME, INSTANTANEOUS-OFF TYPE AND GROUND FAULT TYPE CONFIGURATIONS. MAIN CIRCUIT BREAKER SHALL ALSO BE EQUIPPED WITH A TRIP INDICATOR AND LOCAL CURRENT METER. SQUARE D I-LINE SERIES OR EQUAL.

6 1 #3/0 TO GROUNDING ELECTRODE SYSTEM PER DETAIL #6/E7.03.

7 PROVIDE SOLAR NAMEPLATE AS REQUIRED BY C.E.C.. SEE SHEET #E2.23 FOR ADDITIONAL INFORMATION.

8 PV NEMA 1 HEAVY DUTY FUSED DISCONNECT SWITCH.

9 BOND AND GROUND TRANSFORMER PER DETAIL #6/E7.03.

10 PROVIDE TRANSFORMER IDENTIFICATION NAMEPLATE PER DETAIL #14/E7.01.

11 PROVIDE EG4 POWERPRO WALL MOUNT ALL WEATHER BATTERY STORAGE SYSTEM. CONNECT TO SYSTEM PER MANUFACTURER REQUIREMENTS.

12 PROVIDE EG4 18 kPV HYBRID INVERTER. CONNECT PV STRING CIRCUITS PER MANUFACTURER REQUIREMENTS.

13 PROVIDE 415W PV MODULES AS MANUFACTURED BY Q CELLS, MODEL Q.PEAK DUO ML-G10+ AND TIGO RAPID SHUTDOWN MODULE #TSU-A-F AT EACH UNIT. REFER TO PLANS FOR QUANTITY AND LOCATION OF MODULES.

14 LIMIT OF 4-11 PV MODULES PER STRING DESIGN WITH 415W QCELLS SOLAR PV MODULES.

15 PICK UP AND EXTEND EXISTING FEEDER CONDUCTORS TO NEW CIRCUIT BREAKER.

16 PROVIDE SPACE AND MOUNTING HARDWARE FOR A MINIMUM OF TWO 400/3 AND TWO 225/3 CIRCUIT BREAKERS.

17 PROVIDE (2) 2" SPARE CONDUITS.

18 PROVIDE (1) TIGO DUAL-CORE RSS TRANSMITTER AND OUTDOOR RATED ENCLOSURE. ROUTE PV STRINGS THE RSS CORE AND CONNECT THE RSS TRANSMITTER TO INVERTER - A AS REQUIRED.

19 PROVIDE RAPID SHUTDOWN SWITCH OR BUTTON AND CONNECT TO INVERTER - A AS REQUIRED.

20 1"C - 2 #12.

21 REFER TO SHEETS #E11.13 AND #E2.20 FOR ROUTING OF PV CIRCUITS.

EXISTING FEEDER SCHEDULE:

U2 EXISTING (3) 4"C (SECONDARY), TO BE VERIFIED WITH UTILITY. THREE SETS: 4"C - 3 #750 kcmil (AL) + 1 #350 (AL) GND. EACH.

FP 1 1/4"C - 3 #4 + 1 #6 GND.

A 1"C - 3 #6 + 1 #10 GND.

B 1"C - 3 #1/0 (AL) + 1 #6 (AL) GND.

C 2"C - 3 #4/0 (AL) + 1 #6 (AL) GND.

D 2 1/2"C - 3 #300 kcmil (AL) + 1 #1 (AL) GND.

E 2 1/2"C - 3 #300 kcmil (AL) + 1 #4 (AL) GND.

F 3"C - 3 #600 kcmil (AL) + 1 #1 (AL) GND.

G 2 SETS: 3"C - 4 #250 kcmil + 1 #1 GND. EACH.

H 1 1/4"C - 3 #2 (AL)+ 1 #6 (AL) GND.

J 1 1/2"C - 3 #6 + 1 #8 GND.

M 4"C - 4 #350 kcmil + 1 #2 GND.

N 3"C - 3 #250 kcmil (AL) + 1 #1 (AL) GND.

P 3"C - 3 #350 kcmil (AL) + 1 #1 (AL) GND.

Q 3 1/2"C - 3 #250 kcmil (AL) + 1 #1 (AL) GND.

R 2"C - 3 #2/0 (AL) + 1 #4 (AL) GND.

S 2"C - 4 #2/0 (AL) + 1 #4 GND.

NEW FEEDER SCHEDULE:

(ALL UNDERGROUND CONDUCTORS, OF A 480/277V POWER SYSTEM, SHALL BE TYPE CU-XHHW-2. ALL OTHER CONDUCTORS, INCLUDING THE EQUIPMENT GROUNDING CONDUCTOR, SHALL BE CU-THWN-2 FOR #8 AWG OR LARGER AND CU-THWN FOR #10 AWG OR SMALLER).

40S 1"C - 3 #8 + 1 #10 GND.

60GN 1"C - 3 #6 + 1 #10 GND.

70GN 1"C - 3 #6 + 1 #8 GND.

100GN 1 1/2"C - 4 #2 + 1 #8 GND.

125S 1 1/2"C - 3 #2 + 1 #6 GND.

400GN 3 1/2"C - 4 #500 kcmil + 1 #2 GND.

IDENTIFICATION STAMP
DIV. OF THE STATE ARCHITECT
APP: 02-123307 INC:
REVIEWED FOR
SS ☑ FLS ☑ ACS ☑
DATE: 10/15/2025

Owner:
WASHINGTON UNIFIED SCHOOL DISTRICT

WASHINGTON UNIFIED SCHOOL DISTRICT
6041 SOUTH ELM AVE.
FRESNO, CA 93706

Project Name:
STUDENT SERVICES

Project Address:
WASHINGTON UNION HIGH SCHOOL
6041 SOUTH ELM AVE,
Fresno, CA 93706

integrated designs
by SOMAM, Inc.

ARCHITECTURE
ENGINEERING
INTERIOR DESIGN

6011 N. FRESNO STREET, SUITE 130
FRESNO CALIFORNIA 93710
P:(559) 436-0881 F:(559) 436-0887
E: design@somam.com
integrateddesigns.com

Ownership of Documents
This document, the ideas and designs incorporated herein, as an instrument of Professional Service is the property of Integrated Designs by SOMAM Inc. and is not to be used, in whole or in part for any other project without written authorization.
© COPYRIGHT 2020

Stamp:

Sheet Title:
NEW ONE LINE DIAGRAM

Job No.:
5613

Sheet No.:
E6.02

Release: DSA
Issue Date: 04-23-25

Rose Sing Eastham & Associates
Electrical Consultants
131 S. Dunworth – (559)733-2671
Visalia, California 93292-6705

REGISTERED PROFESSIONAL ENGINEER
No. E-18786
Exp. 6/30/27
ELECTRICAL
STATE OF CALIFORNIA

Z:\Drafting\Jobs\RSE\5XXX\5613 Washington High School\Revit\Washington Union HS - Student Services Bldg\E6.02.rvt DATE SAVED: 09/19/25 By: Karen DATE PLOTTED: 09/19/25 JOB # 25-408-SE

480/277V, 3 PH, 4 W
400 A. BUSSING 400 A. MAIN BKR.
42 CIRCUIT

PANEL "HSS"

10K BREAKER A.I.C.
5 3/4" MAX. ENCL. DEPTH
SURF MOUNTING
NEMA 1 ENCLOSURE

CKT	BKR	LOAD: V.A. A	B	C	DESCRIPTION	DESCRIPTION	LOAD: V.A. C	B	A	BKR	CKT
1	20/1	1234			LIGHTS - INTERIOR SOUTH	RTU-1 / ECON, 21.8 FLA			6041	40/3	2
3	20/1		1274		LIGHTS - INTERIOR HALLWAYS			6041			4
5	20/1			1327	LIGHTS - INTERIOR		6041				6
7	20/1	1175			LIGHTS - LOBBY, RECEPT.	RTU-2 / ECON, 16.1 FLA			4462	30/3	8
9	20/1		120		LIGHTS - EXTERIOR			4462			10
11	20/1			265	LIGHTS - EXTERIOR		4462				12
13	20/1	184			LIGHTS - LOBBY WALL	RTU-3 / ECON, 9.8 FLA			2716	20/3	14
15	20/1				SPARE			2716			16
17	20/1				SPARE		2716				18
19	20/1				SPARE	WATER HEATER "WH-1"			4101	20/3	20
21	20/1				SPARE			4101			22
23	20/1				SPARE		4101				24
25					SPACE	SPACE					26
27					SPACE	SPACE					28
29					SPACE	SPACE					30
31					SPACE	SPACE					32
33					SPACE	SPACE					34
35					SPACE	SPACE					36
37					SPACE	XFMR "TLSS"			14972	125/3	38
39					SPACE			16513			40
41					SPACE		14133				42

LOAD SUMMARY	A	B	C	
CONNECTED LOAD (VA) :	34886	35227	33045	TOTAL CALCULATED
25% LCL/LML (VA) :	1510	1510	1510	LOAD FOR PANEL:
TOTAL LOAD (VA) :	36396	36738	34556	107689 VA
TOTAL LOAD (AMPS) :	131.4	132.6	124.7	

TYPICAL PANEL SCHEDULE NOTES:

(A) PROVIDE A LOCK-ON DEVICE AT THIS CIRCUIT BREAKER, 'RED IN COLOR', SPACEAGE #LOCK-FA OR EQUAL. PROVIDE AN ENGRAVED NAMEPLATE: 'FIRE ALARM CIRCUIT', WHITE LETTERS ON A RED BACKGROUND. MOUNT NAMEPLATE ONTO INTERIOR TRIM AND ADJACENT TO CIRCUIT BREAKER.

120/208V, 3 PH, 4 W
100 A. BUSSING 100 A. MAIN BKR.
42 CIRCUIT

PANEL "LSS1"

10K BREAKER A.I.C.
5 3/4" MAX. ENCL. DEPTH
SURF MOUNTING
NEMA 1 ENCLOSURE

	CKT	BKR	LOAD: V.A. A	B	C	DESCRIPTION	DESCRIPTION	LOAD: V.A. C	B	A	BKR	CKT
	1	20/1	1260			RECEPT - STAFF LOUNGE	RECEPT - JAN, ELEC., RR			1080	20/1	2
	3	20/1		1000		RECEPT - REFRIG.	RECEPT - DIRECT., OFFICE		1080		20/1	4
	5	20/1			1200	RECEPT - COUNTER	RECEPT -EAST OFFICE	720			20/1	6
	7	20/1	1200			RECEPT - COUNTER	RECEPT - EAST OFFICES			1080	20/1	8
	9	20/1		900		RECEPT - SW OFFICES	RECEPT - EAST OFFICES		1080		20/1	10
	11	20/1			900	RECEPT - SW OFFICES	RECEPT - NE OFFICES	540			20/1	12
	13	20/1	900			RECEPT - SW DIRECT.	RECEPT - NE OFFICES			900	20/1	14
	15	20/1		1260		RECEPT - CONFERENCE	RECEPT - CONTR. SE OFF.		1260		20/1	16
	17	20/1			1260	RECEPT - CONTR. SW OFF.	RECEPT - CONTR. E. OFF.	720			20/1	18
	19	20/1	720			RECEPT- CONTR. CONF.	RECEPT - CONTR. E. OFF.			720	20/1	20
	21	20/1		500		RECEPT - D.F.	RECEPT - IDF				20/1	22
	23	20/1			500	FIRE RISER BELL	RECEPT - ROOF	540			20/1	24
(A)	25	20/1	500			FIRE ALARM "P.E.P.-SS"	CIRC. PUMP, CP-1			92	20/1	26
	27	20/1		500		FIRE ALARM "F.A.T.-SS"	SPARE				20/1	28
	29	20/1			500	LIGHTING CONTROLS	SPARE				20/1	30
	31	20/1				SPARE	SPARE				20/1	32
	33	20/1				SPARE	SPARE				20/1	34
	35	20/1				SPARE	SPARE				20/1	36
	37					SPACE	SPACE					38
	39					SPACE	ODU-1		1373		20/3	40
	41					SPACE		1373				42

LOAD SUMMARY	A	B	C	
CONNECTED LOAD (VA) :	8452	8953	8253	TOTAL CALCULATED
25% LCL/LML (VA) :	0	0	0	LOAD FOR PANEL:
TOTAL LOAD (VA) :	8452	8953	8253	25658 VA
TOTAL LOAD (AMPS) :	70.4	74.6	68.8	

120/208V, 3 PH, 4 W
100 A. BUSSING 100 A. MAIN BKR.
42 CIRCUIT

PANEL "LSS2"

10K BREAKER A.I.C.
5 3/4" MAX. ENCL. DEPTH
SURF MOUNTING
NEMA 1 ENCLOSURE

	CKT	BKR	LOAD: V.A. A	B	C	DESCRIPTION	DESCRIPTION	LOAD: V.A. C	B	A	BKR	CKT
	1	20/1	900			RECEPT - NURSE	RECEPT - PRINTER			1200	20/1	2
	3	20/1		1080		RECEPT - NURSE, RR'S	RECEPT - STOR., WORKRM		540		20/1	4
	5	20/1			720	RECEPT - HALL, W. EXT., BOOKS	RECEPT - TEACH., WORKRM	900			20/1	6
	7	20/1	900			RECEPT - POLICE, RR	RECEPT - TEACH., WORKRM			540	20/1	8
	9	20/1		720		RECEPT - OFFICES	RECEPT - OFFICES		1260		20/1	10
	11	20/1			900	RECEPT -OFFICES	RECEPT - OFFICES	1260			20/1	12
	13	20/1	720			RECEPT - OFFICES	LIGHT - FIRE LANE GATE			100	20/1	14
	15	20/1		900		RECEPT - OFFICES	RECEPT - RECEP. DESK		900		20/1	16
	17	20/1			720	RECEPT - CONTR. OFFICES	RECEPT - CONTR. RECEP.	900			20/1	18
	19	20/1	1080			RECEPT - CONTR. OFFICES	RECEPT - ADMIN			720	20/1	20
	21	20/1		1080		RECEPT - CONTR. OFFICES	RECEPT - ADMIN		1080		20/1	22
(A)	23	20/1			120	FIRE SMOKE DAMPERS	RECEPT - LOBBY	360			20/1	24
	25	20/1				SPARE	RECEPT - CONTR., LOBBY			360	20/1	26
	27	20/1				SPARE	SPARE				20/1	28
	29	20/1				SPARE	SPARE				20/1	30
	31					SPACE	SPACE					32
	33					SPACE	SPACE					34
	35					SPACE	SPACE					36
	37					SPACE	SPACE					38
	39					SPACE	SPACE					40
	41					SPACE	SPACE					42

LOAD SUMMARY	A	B	C	
CONNECTED LOAD (VA) :	6520	7560	5880	TOTAL CALCULATED
25% LCL/LML (VA) :	0	0	0	LOAD FOR PANEL:
TOTAL LOAD (VA) :	6520	7560	5880	19960 VA
TOTAL LOAD (AMPS) :	54.3	63.0	49.0	

Rose Sing Eastham & Associates
Electrical Consultants
131 S. Dunworth – (559)733-2671
Visalia, California 93292-6705

REGISTERED PROFESSIONAL ENGINEER
ROBERT K. EASTHAM
No. E-18786
Exp. 6/30/27
ELECTRICAL
STATE OF CALIFORNIA

IDENTIFICATION STAMP
DIV. OF THE STATE ARCHITECT
APP: 02-123307 INC:
REVIEWED FOR
SS ☑ FLS ☑ ACS ☑
DATE: 10/15/2025

Owner:
WASHINGTON UNIFIED SCHOOL DISTRICT

WASHINGTON UNIFIED SCHOOL DISTRICT
6041 SOUTH ELM AVE.
FRESNO, CA 93706

Project Name:
STUDENT SERVICES

Project Address:
WASHINGTON UNION HIGH SCHOOL
6041 SOUTH ELM AVE,
Fresno, CA 93706

integrated designs
by SOMAM, Inc.

ARCHITECTURE
ENGINEERING
INTERIOR DESIGN

6011 N. FRESNO STREET, SUITE 130
FRESNO CALIFORNIA 93710
P:(559) 436-0881 F:(559) 436-0887
E: design@somam.com
integrateddesigns.com

Ownership of Documents
This document, the ideas and designs incorporated herein, as an instrument of Professional Service is the property of Integrated Designs by SOMAM Inc. and is not to be used, in whole or in part for any other project without written authorization.
© COPYRIGHT 2020

Stamp:

Sheet Title:
PANEL SCHEDULES

Job No.:
5613

Sheet No.:
E6.03

Release: DSA Issue Date: 04-23-25

1" = 50'-0" 150 100 50 0 50
1" = 40'-0" 120 80 40 0 40
1" = 30'-0" 90 60 30 0 30
1" = 20'-0" 60 40 20 0 20
1/8" = 1'-0" 24 16 8 0 8
1/4" = 1'-0" 12 8 4 0 4
Z:\Drafting\Jobs\KRS\5613\E5613.01\mm\Washington High School\5613 Washington Union HS - Student Services Bldg\E6.03.dwg DATE SAVED: 09/19/25 By: Karen DATE PLOTTED: 09/19/25 JOB # 25-108-SE

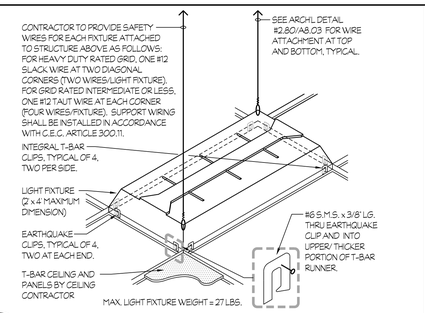

1 RECESSED FIXTURE MOUNTING — NTS

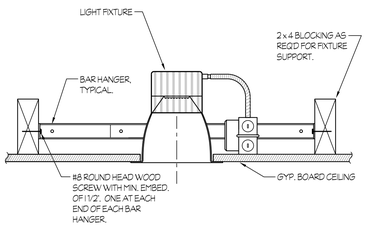

2 RECESSED DOWNLIGHT MOUNTING — NTS

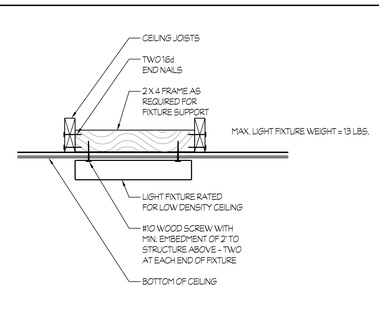

3 SURFACE FIXTURE MOUNTING — NTS

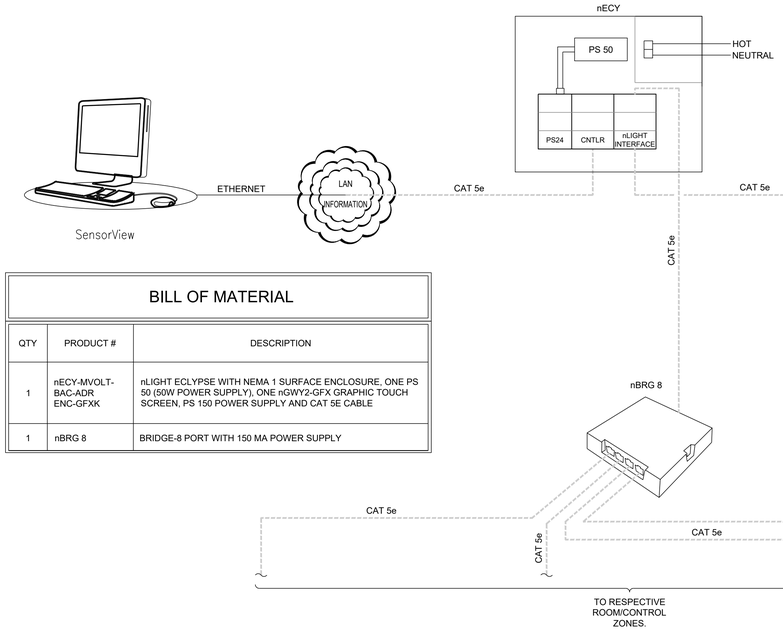

BILL OF MATERIAL

QTY	PRODUCT #	DESCRIPTION
1	nECY-MVOLT-BAC-ADR ENC-GFXK	nLIGHT ECLYPSE WITH NEMA 1 SURFACE ENCLOSURE, ONE PS 50 (50W POWER SUPPLY), ONE nGWY2-GFX GRAPHIC TOUCH SCREEN, PS 150 POWER SUPPLY AND CAT 5E CABLE
1	nBRG 8	BRIDGE-8 PORT WITH 150 MA POWER SUPPLY

4 SENSOR SWITCH "nLIGHT" DEVICES WIRING DIAGRAM
(NOTE: ACTUAL SEQUENCE OF DEVICES IS TO BE PER PLANS) — NTS

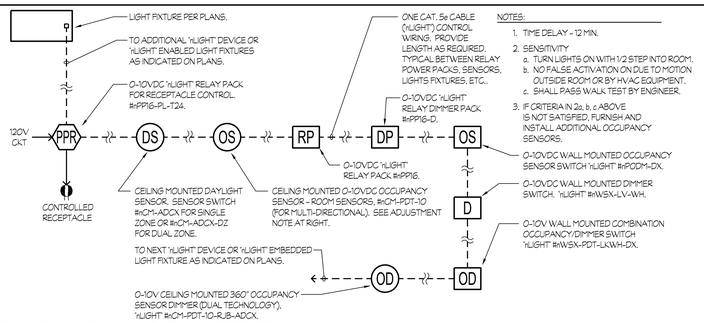

NOTES:
1. TIME DELAY - 12 MIN.
2. SENSITIVITY
   a. TURN LIGHTS ON WITH 1/2 STEP INTO ROOM.
   b. NO FALSE ACTIVATION ON DUE TO MOTION OUTSIDE ROOM OR BY HVAC EQUIPMENT.
   c. SHALL PASS WALK TEST BY ENGINEER.
3. IF CRITERIA IN 2a, b, c ABOVE IS NOT SATISFIED, FURNISH AND INSTALL ADDITIONAL OCCUPANCY SENSORS.

5 SENSOR SWITCH "nLIGHT" DEVICES WIRING DIAGRAM
(NOTE: ACTUAL SEQUENCE OF DEVICES IS TO BE PER PLANS) — NTS

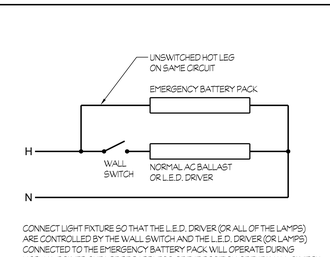

CONNECT LIGHT FIXTURE SO THAT THE L.E.D. DRIVER (OR ALL OF THE LAMPS) ARE CONTROLLED BY THE WALL SWITCH AND THE L.E.D. DRIVER (OR LAMPS) CONNECTED TO THE EMERGENCY BATTERY PACK WILL OPERATE DURING NORMAL POWER OUTAGE REGARDLESS OF THE POSITION OF THE WALL SWITCH.

6 EMERGENCY BATTERY PACK WIRING DIAGRAM — NTS

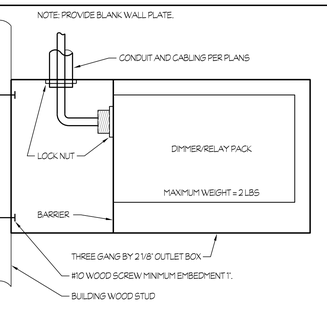

7 DIMMER/RELAY PACK MOUNTING — NTS

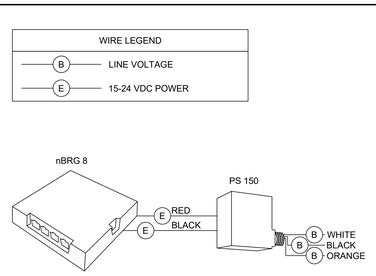

8 NETWORK INTERFACE BRIDGE KIT — NTS

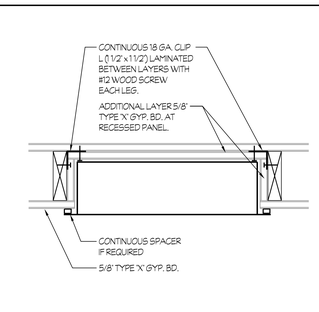

9 TWO HOUR ENCLOSURE
FOR ELECTRICAL PANEL OR SIGNAL CABINET WHERE REQUIRED — NTS

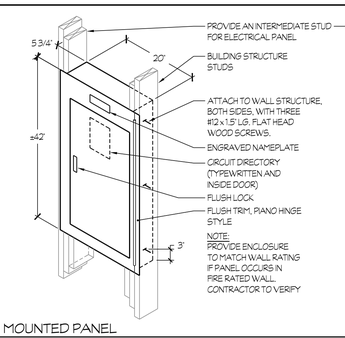

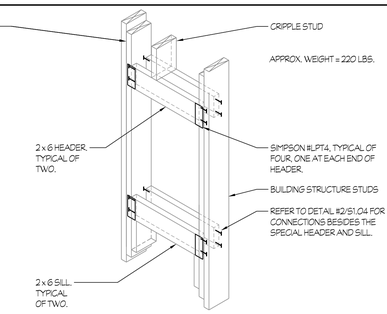

10 FLUSH MOUNTED PANEL — NTS

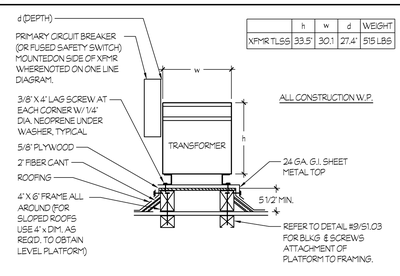

	h	w	d	WEIGHT
XFMR TL-5-G	33.5"	30.1	27.4"	515 LBS

11 ROOF MOUNT TRANSFORMER — NTS

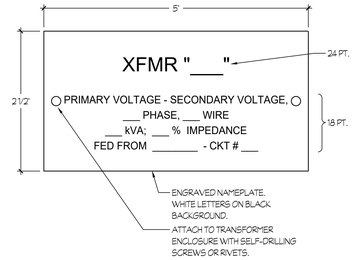

14 TRANSFORMER IDENTIFICATION NAMEPLATE — NTS

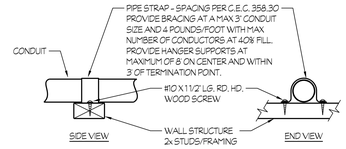

CONDUIT BRACING AT WALL STRUCTURE

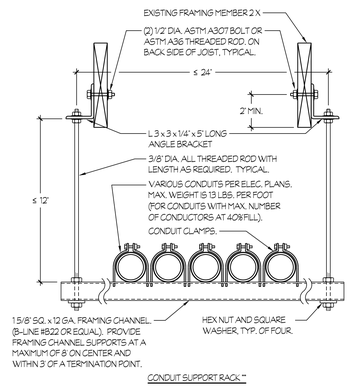

CONDUIT SUPPORT RACK **

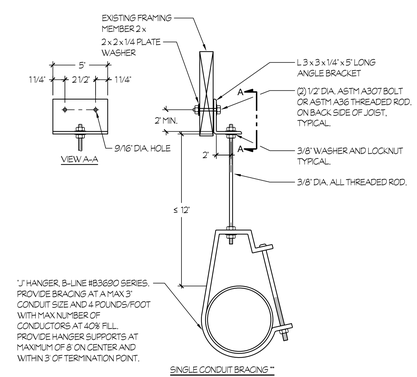

SINGLE CONDUIT BRACING **

** CONDUIT SUPPORT RACK AND SINGLE CONDUIT BRACING DETAILS FALL UNDER THE 12' RULE EXEMPTION, IR 16-13, SECTION 3.1.1.

12 CONDUIT MOUNTING DETAILS — NTS

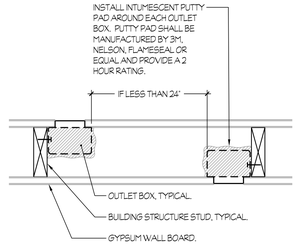

13 FIRE RATED OUTLET BOX ENCLOSURE
(REQUIRED IF OUTLET BOXES ARE INSTALLED WITHIN 24" OF EACH OTHER IN A FIRE RATED WALL) — NTS

Rose Sing Eastham & Associates
Electrical Consultants
131 S. Dunworth – (559)733-2671
Visalia, California 93292-6705

RESPONSIBLE PROFESSIONAL KIRK A. EASTHAM No. E-18786 Exp. 6/30/27 ELECTRICAL STATE OF CALIFORNIA

IDENTIFICATION STAMP
DIV. OF THE STATE ARCHITECT
APP: 02-123307 INC:
REVIEWED FOR
SS ☑ FLS ☑ ACS ☑
DATE: 10/15/2025

Owner:
WASHINGTON UNIFIED SCHOOL DISTRICT
WASHINGTON UNIFIED SCHOOL DISTRICT
6041 SOUTH ELM AVE.
FRESNO, CA 93706

Project Name:
STUDENT SERVICES

Project Address:
WASHINGTON UNION HIGH SCHOOL
6041 SOUTH ELM AVE,
Fresno, CA 93706

integrated designs
by SOMAM, Inc.
ARCHITECTURE ENGINEERING INTERIOR DESIGN
6011 N. FRESNO STREET, SUITE 130
FRESNO CALIFORNIA 93710
P:(559) 436-0881 F:(559) 436-0887
E: design@somam.com
integrateddesigns.com

Ownership of Documents
This document, the ideas and designs incorporated herein, as an instrument of Professional Service is the property of Integrated Designs by SOMAM Inc. and is not to be used, in whole or in part for any other project without written authorization.
© COPYRIGHT 2020

Stamp:

Sheet Title:
DETAILS

Job No.: **5613**

Sheet No.: E7.01

Release: DSA — Issue Date: 04-23-25

1" = 50'-0" 0 50 100 150
1" = 40'-0" 0 40 80 120
1" = 30'-0" 0 30 60 90
1" = 20'-0" 0 20 40
1/8" = 1'-0" 0 8 16 24
1/4" = 1'-0" 0 4 8 12

Z:\Drafting\Jobs\KES\SCHOOLS\Fresno\Washington High School\5613 Washington HS - Student Services Bldg\E7.01.dwg DATE: 04/23/25 BY: Phoebe DATE PLOTTED: 09/19/25 JOB #: 25-108-SE

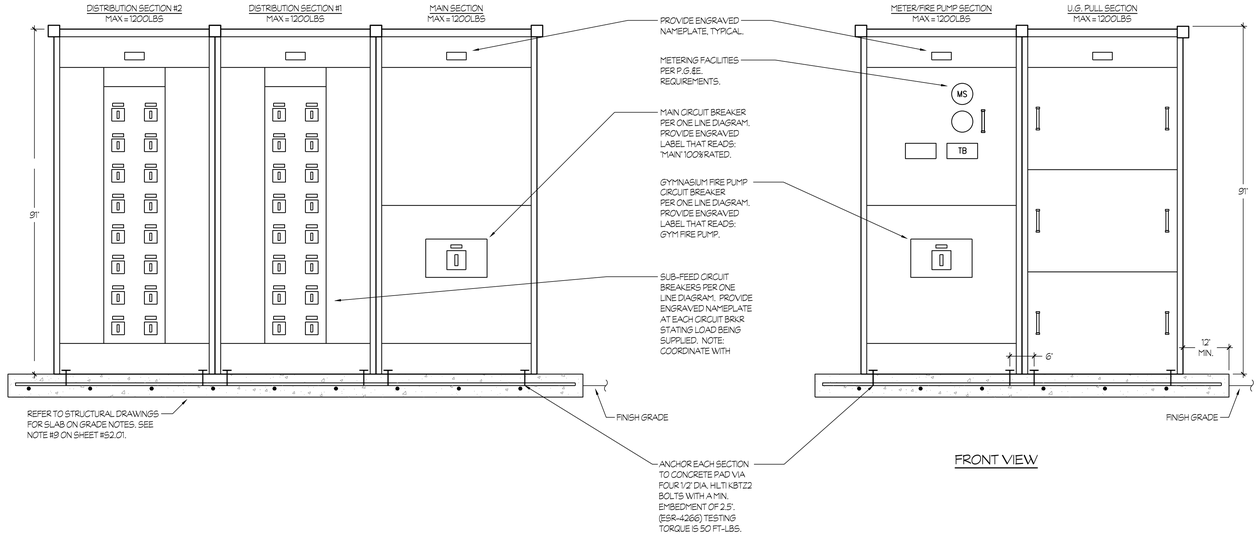

FRONT VIEW

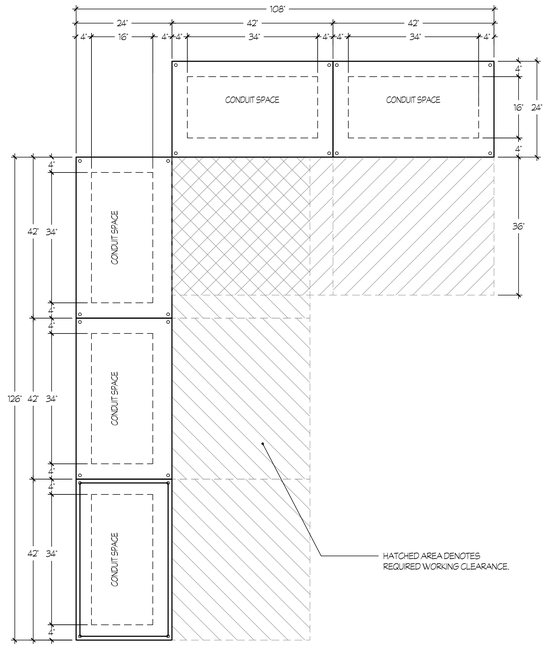

PLAN VIEW

1 NEW MAIN SWITCHBOARD "MSN" MOUNTING DETAIL

NTS

1" = 50'-0" 1" = 40'-0" 1" = 30'-0" 1" = 20'-0" 1/8" = 1'-0" 1/4" = 1'-0"

Z:\Drafting\Jobs\K12\SCHOOLS\Fresno\Washington High School\5613 Washington Union HS - Student Services Bldg\5613.2.dwg DATE: 5/14/25 08:27:25 BY: Phoebe DATE PLOTTED: 09/19/25 JOB # 25-108-SE

IDENTIFICATION STAMP
DIV. OF THE STATE ARCHITECT
APP: 02-123307 INC:
REVIEWED FOR
SS ☑ FLS ☑ ACS ☑
DATE: 10/15/2025

Owner:
WASHINGTON UNIFIED SCHOOL DISTRICT

WASHINGTON UNIFIED SCHOOL DISTRICT
6041 SOUTH ELM AVE.
FRESNO, CA 93706

Project Name:
STUDENT SERVICES

Project Address:
WASHINGTON UNION HIGH SCHOOL
6041 SOUTH ELM AVE,
Fresno, CA 93706

integrated designs
by SOMAM, Inc.

**ARCHITECTURE
ENGINEERING
INTERIOR DESIGN**

6011 N. FRESNO STREET, SUITE 130
FRESNO CALIFORNIA 93710
P:(559) 436-0881 F:(559) 436-0887
E: design@somam.com
integrateddesigns.com

Ownership of Documents
This document, the ideas and designs incorporated herein, as an instrument of Professional Service is the property of Integrated Designs by SOMAM Inc. and is not to be used, in whole or in part for any other project without written authorization.
© COPYRIGHT 2020

Stamp:

Sheet Title:
DETAILS

Job No.: **5613**

Sheet No.: E7.02

Release: DSA Issue Date: 04-23-25

Rose Sing Eastham & Associates
Electrical Consultants
131 S. Dunworth – (559)733-2671
Visalia, California 93292-6705

REGISTERED PROFESSIONAL ENGINEER
No. E-18786
Exp. 6/30/27
ELECTRICAL
STATE OF CALIFORNIA

PULL BOX	P1, P2, P3, P4	SB1	SB2	PB-D1	PB-D2
W	17"	13"	13"	30"	30"
L	30"	24"	24"	48"	48"
CHRISTY #	B1730	B1324	B1324	B3048	B3048

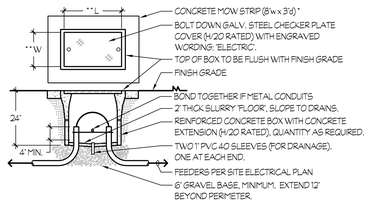

*NOTE: WHERE PULL BOX IS ADJACENT TO CONCRETE WALK, EXTEND MOWSTRIP TO CONNECT WITH WALK. FOAM SEAL ALL CONDUITS IN YARD BOXES.

**NOTE: INTERIOR DIMENSIONS MEASURED AT 'OPENING' OF PULL BOX.

1 PULL BOX
NTS

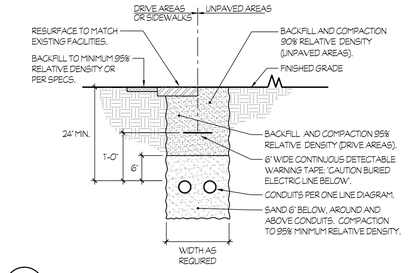

3 TRENCH DETAIL
NTS

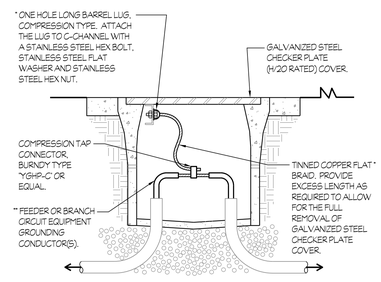

* THIS TYPICAL WORK SHALL BE PROVIDED FOR EACH SECTION OF A MULTIPLE SECTION COVER.

** THIS TYPICAL WORK SHALL BE DONE FOR EACH OF THE LARGEST FEEDER (OR BRANCH CIRCUIT) EQUIPMENT GROUNDING CONDUCTOR, PASSING THRU THE RESPECTIVE PULL BOX, WHICH ORIGINATE FROM SEPARATE SOURCES/VOLTAGES.

MATRIX FOR TINNED COPPER FLAT BRAID		
SIZE OF EQUIPMENT GROUNDING CONDUCTOR (a)	ALPHA WIRE PART #	OLYMPIC WIRE AND CABLE PART #
#8	1233	708
#6	1235	710
#4	1239	710
#2 THRU #1/0	1240	713
#2/0 THRU #4/0	1241	714

(a) CONTAINED IN THE LARGEST FEEDER (OR BRANCH CIRCUIT) PASSING THRU THE RESPECTIVE PULL BOX.

2 BONDING OF STEEL CHECKER PLATE COVERS
(AT ALL 'POWER' PULL BOXES)
NTS

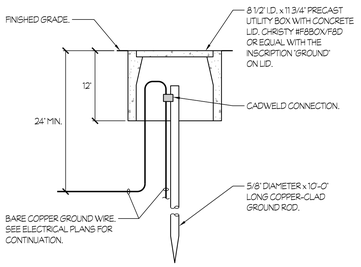

4 EXPOSED CONDUIT TRANSITION DETAIL
NTS

5 GROUND WELL DETAIL
NTS

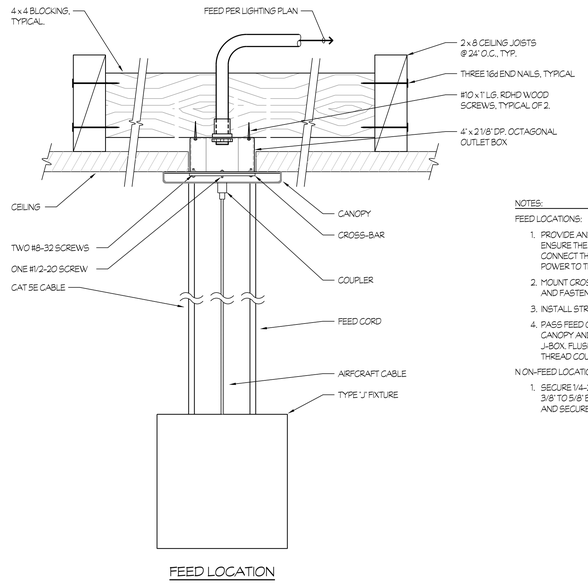

FEED LOCATION

NOTES:

FEED LOCATIONS:

1. PROVIDE AND INSTALL 4Ø J-BOX INTO THE CEILING. ENSURE THE BOTTOM EDGE IS FLUSH WITH CEILING. CONNECT THE METAL CONDUIT FROM BUILDING POWER TO THE J-BOX.
2. MOUNT CROSSBAR TO J-BOX USING (2) #8 SCREWS AND FASTEN IT TO SECURELY TO J-BOX.
3. INSTALL STRAIN RELIEF TO THE FEED CORD.
4. PASS FEED CORD THROUGH THE BUSHING IN THE CANOPY AND MAKE WIRE CONNECTIONS INSIDE J-BOX. FLUSH CANOPY WITH THE CROSSBAR AND THREAD COUPLER ONTO THE CROSSBAR SCREW.

NON-FEED LOCATIONS:

1. SECURE 1/4-20 THREADED ROD APPROXIMATELY 3/8" TO 5/8" BELOW THE CEILING. INSERT CANOPY AND SECURELY FASTEN THE COUPLER.

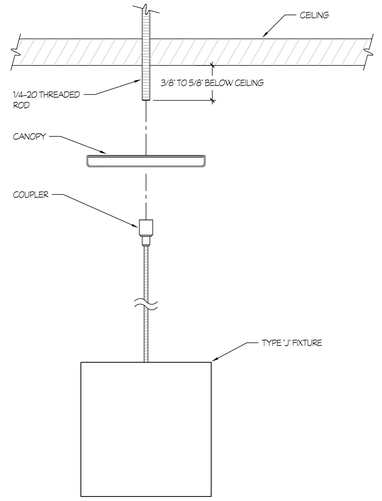

NON-FEED LOCATION

7 TYPE "J" FIXTURE MOUNTING
NTS

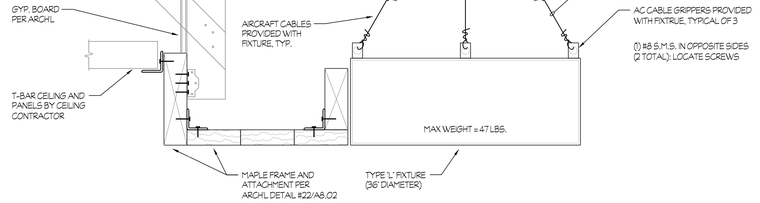

8 TYPE "L" FIXTURE MOUNTING
NTS

THE FOLLOWING INFORMATION IS FOR REFERENCE ONLY. ALL PENETRATIONS IN FIRE-RATED ASSEMBLIES SHALL BE PROTECTED AS REQUIRED BY C.B.C., CHAPTER 7. THE U.L. FIRESTOP SYSTEM SHALL BE INSTALLED AND USED EXACTLY AS STATED IN THE U.L. FIRE RESISTANCE DIRECTORY.

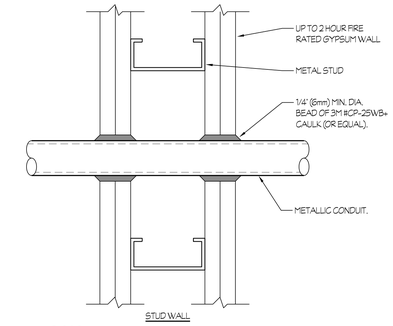

STUD WALL

NOTES:

1. THE CAULK IS TO BE FORCED INTO THE ANNULAR SPACE TO THE MAXIMUM EXTENT POSSIBLE FLUSH WITH THE EXTERIOR OF THE PENETRATION SURFACE.
2. FINISH CAULKING WITH A 1/4" (6mm) MINIMUM BEAD OF CP-25WB+ CAULK APPLIED TO THE PERIMETER OF THE CONDUIT/PIPE AT ITS EGRESS FROM THE WALL.
3. THE MAXIMUM ANNULAR SPACE IS NOT TO EXCEED 3/16" (5mm).
4. INSTALL 3M FIRESTOP ON BOTH SIDES OF THE WALL.
5. THESE RECOMMENDATIONS ARE BASED ON PRODUCT PERFORMANCE PER ASTM E814 (ANSI/UL 1479) FIRE TEST AND UL THROUGH-PENETRATION FIRESTOP SYSTEM #WL1001.
6. 3M MODEL #CP-25WB+ CAULK.
7. C.S.F.M. #4485-0941:0116.

10 CONDUIT PENETRATION FIRESTOP DETAIL
NTS

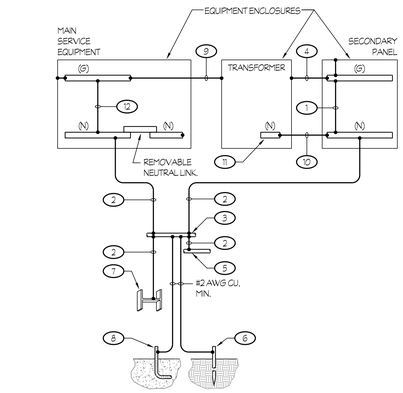

NOTES (THIS DETAIL ONLY):

1. SYSTEM BONDING JUMPER PER C.E.C. 250.30 (1).
2. FULL SIZE GROUNDING ELECTRODE CONDUCTOR PER C.E.C., TABLE 250.66.
3. METAL WATER PIPING PER C.E.C. 250.104.
4. SUPPLY SIDE BONDING JUMPER PER C.E.C. 250.30 (A), (2).
5. OTHER ABOVEGROUND METALLIC PIPING SYSTEMS PER C.E.C. 250.104.
6. 5/8" DIA. x 10'-0" LG COPPER CLAD ROD ELECTRODE PER C.E.C. 250.52 (A), (5). REFER TO DETAIL #5/E7.03.
7. BUILDING STRUCTURAL STEEL PER C.E.C. 250.104.
8. CONCRETE ENCASED ELECTRODE PER C.E.C. 250.52 (A), (3).
9. EQUIPMENT GROUND CONDUCTOR PER C.E.C., TABLE 250.122.
10. NEUTRAL CONDUCTOR PER FEEDER SCHEDULE.
11. NEUTRAL BAR.
12. MAIN BONDING JUMPER PER C.E.C. 250.28.

LEGEND:

(G) DENOTES THE GROUND BUS OR BAR.
(N) DENOTES THE NEUTRAL BUS OR BAR.

GENERAL NOTE:

ALL MATERIALS AND METHODS USED IN GROUNDING AND BONDING SHALL COMPLY WITH C.E.C. ARTICLE 250.

6 MAIN SERVICE EQUIPMENT, XFMR, AND SECONDARY PANEL - GROUNDING AND BONDING
NTS

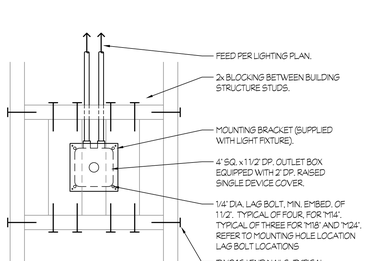

WOOD STUDS

MOUNTING HOLE LOCATION CHART				
FIXTURE	A	B	C	D
M14	6 1/4"	N/A	6 1/4"	N/A
M18	8"	4"	N/A	6"
M24	8"	4"	N/A	6"

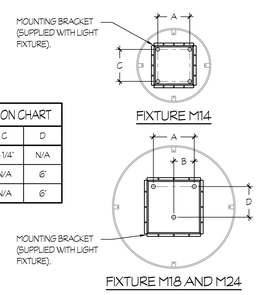

FIXTURE M18 AND M24

9 TYPE "M14, M18, M24" FIXTURE MOUNTING
NTS

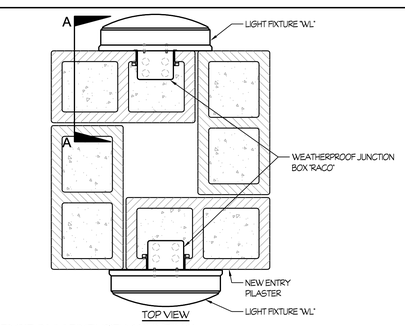

TOP VIEW

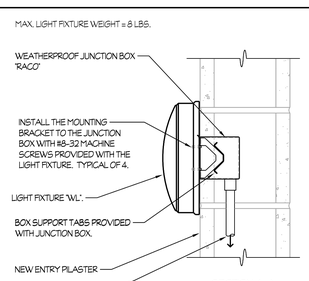

SECTION A-A

11 TYPE "WL" FIXTURE MOUNTING
NTS

Rose Sing Eastham & Associates
Electrical Consultants
131 S. Dunworth - (559)733-2671
Visalia, California 93292-6705

REGISTERED PROFESSIONAL ENGINEER — ROSE SING KIRK EASTHAM — No. E-18786 — Exp. 6/30/27 — ELECTRICAL — STATE OF CALIFORNIA

IDENTIFICATION STAMP
DIV. OF THE STATE ARCHITECT
APP: 02-123307 INC:
REVIEWED FOR
SS ☑ FLS ☑ ACS ☑
DATE: 10/15/2025

Owner:
WASHINGTON UNIFIED SCHOOL DISTRICT

WASHINGTON UNIFIED SCHOOL DISTRICT
6041 SOUTH ELM AVE.
FRESNO, CA 93706

Project Name:
STUDENT SERVICES

Project Address:
WASHINGTON UNION HIGH SCHOOL
6041 SOUTH ELM AVE,
Fresno, CA 93706

integrated designs
by SOMAM, Inc.

ARCHITECTURE ENGINEERING INTERIOR DESIGN

6011 N. FRESNO STREET, SUITE 130
FRESNO CALIFORNIA 93710
P:(559) 436-0881 F:(559) 436-0887
E: design@somam.com
integrateddesigns.com

Ownership of Documents
This document, the ideas and designs incorporated herein, as an instrument of Professional Service is the property of Integrated Designs by SOMAM Inc. and is not to be used, in whole or in part for any other project without written authorization.
© COPYRIGHT 2020

Stamp:

Sheet Title:
DETAILS

Job No.:
5613

Sheet No.:
E7.03

Release: DSA Issue Date: 04-23-25

Z:\Drafting\Jobs\PDF\5XXX\53\Fresno\Washington High School\5613 Washington Union HS - Student Services Bldg\17.03.dwg DATE: 3/4/25 By: Karen DATE PLOTTED: 09/19/25 08:49 By: Karen

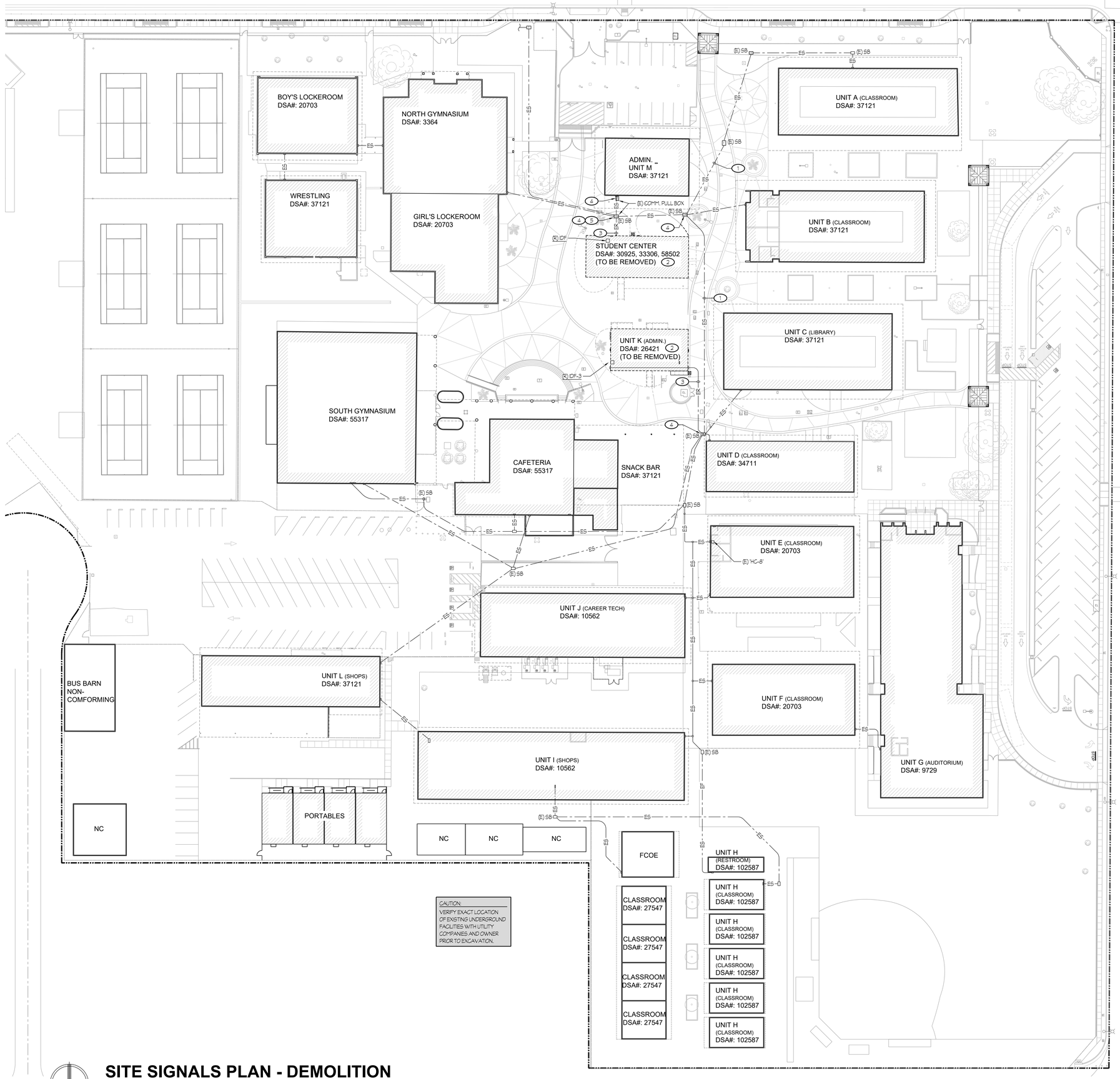

SITE SIGNALS PLAN - DEMOLITION

STUDENT SERVICES

SCALE: 1" = 30'-0"

NOTES (THIS SHEET ONLY):

1. —— - -ES- - —— DENOTES THE APPROXIMATE LOCATION OF EXISTING 'SIGNALS' FEEDERS AND/OR 'SPARE' CONDUITS. VERIFY EXACT LOCATION AT SITE.
2. TYPICAL OF EXISTING SIGNAL DEVICES LOCATED IN BUILDINGS BEING REMOVED: DISCONNECT AND REMOVE EXISTING WIRING AND DEVICES.
3. —— - -ER- - —— DISCONNECT AND REMOVE EXISTING CONDUIT / CABLES BETWEEN TO CLEAR WAY FOR NEW CONSTRUCTION. DISCONNECT AND PULL BACK EXISTING FIBER TO PULLBOX SB5. VERIFY EXACT LOCATION AT SITE.
4. EXISTING PULL BOX TO REMAIN. PROTECT IN PLACE DURING CONSTRUCTION.
5. —— - -ER- - —— DISCONNECT AND REMOVE EXISTING CONDUIT / CABLES BETWEEN TO CLEAR WAY FOR NEW CONSTRUCTION. DISCONNECT AND PULL BACK EXISTING FIBER TO PULLBOX (E) SB. VERIFY EXACT LOCATION AT SITE.

IDENTIFICATION STAMP
DIV. OF THE STATE ARCHITECT
APP: 02-123307 INC:
REVIEWED FOR
SS ☑ FLS ☑ ACS ☑
DATE: 10/15/2025

Owner:

WASHINGTON UNIFIED SCHOOL DISTRICT
6041 SOUTH ELM AVE.
FRESNO, CA 93706

Project Name:
STUDENT SERVICES

Project Address:
WASHINGTON UNION HIGH SCHOOL
6041 SOUTH ELM AVE,
Fresno, CA 93706

integrated designs
by SOMAM, Inc.

ARCHITECTURE
ENGINEERING
INTERIOR DESIGN

6011 N. FRESNO STREET, SUITE 130
FRESNO CALIFORNIA 93710
P:(559) 436-0881 F:(559) 436-0887
E: design@somam.com
integrateddesigns.com

Ownership of Documents
This document, the ideas and designs incorporated herein, as an instrument of Professional Service is the property of Integrated Designs by SOMAM Inc. and is not to be used, in whole or in part for any other project without written authorization.
© COPYRIGHT 2020

Stamp:

Sheet Title:
SITE SIGNALS PLAN - DEMOLITION

Job No.: 5613

Sheet No.: T1.10

Release: DSA
Issue Date: 04-23-25

Rose Sing Eastham & Associates
Electrical Consultants
131 S. Dunworth – (559)733-2671
Visalia, California 93292-6705

REGISTERED PROFESSIONAL ENGINEER
SEVEN KIRK ROSE
No. E-18786
Exp. 6/30/27
ELECTRICAL
STATE OF CALIFORNIA

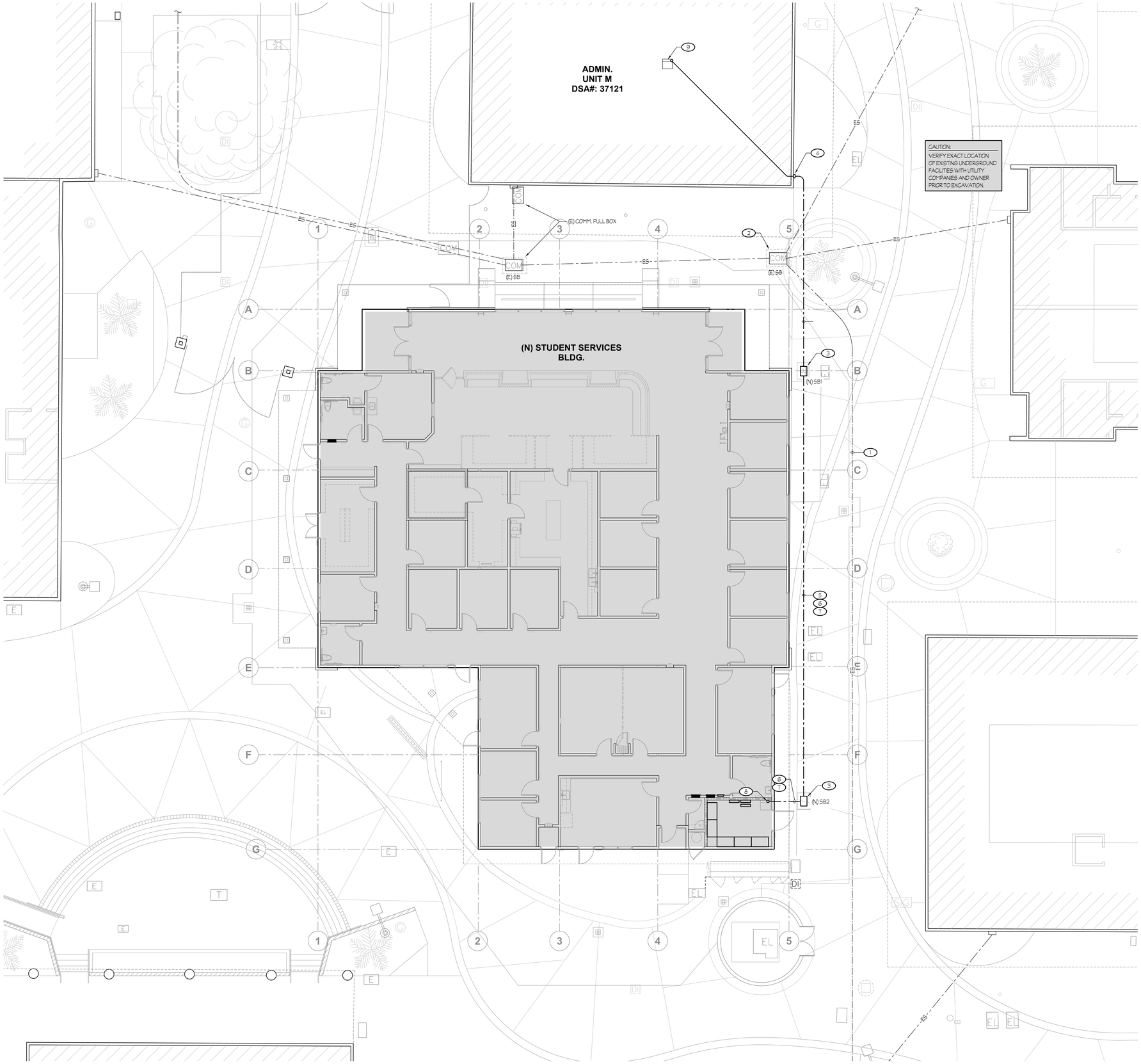

NOTES (THIS SHEET ONLY):

1. — - —ES— - — DENOTES THE APPROXIMATE LOCATION OF EXISTING 'SIGNAL' FEEDERS AND/OR 'SPARE' CONDUITS. VERIFY EXACT LOCATION AT SITE.
2. EXISTING COMMUNICATION PULL BOX. PROTECT IN PLACE DURING CONSTRUCTION. REFER TO SHEET #T1.10 FOR ADDITIONAL INFORMATION.
3. REFER TO DETAIL #1/E7.03 FOR PULL BOX REQUIREMENTS. TYPICAL, U.O.N..
4. PROVIDE WEATHERPROOF BOX (MIN 12" X 12" X 6") FOR ROUTING OF THE SIGNALS CABLES.
5. REFER TO DETAIL #3/E7.03 FOR TRENCHING REQUIREMENTS.
6. NEW 2" CONDUIT. NEW 12 STRAND SINGLE MODE FIBER OPTIC BERKTEK # LTR012AB0403
7. 2" SPARE CONDUIT.
8. CONDUIT RISER FROM UNDERSLAB. VERIFY EXACT CONNECTION POINT WITH GENERAL CONTRACTOR PRIOR TO ROUGH-IN.
9. EXISTING MDF IN ADMIN BUILDING.

SITE SIGNALS PLAN - NEW
STUDENT SERVICES

SCALE: 1/8" = 1'-0"

1" = 50'-0" | 1" = 40'-0" | 1" = 30'-0" | 1" = 20'-0" | 1/8" = 1'-0" | 1/4" = 1'-0"

Z:\Drafting\Jobs\JOBS\5613\T1\Revit_Washington High School5613 Washington Union HS - Student Services Bldg(T1.11).rvt DATE PLOTTED: 10/15/25 BY: Karen JOB # 25-108-SE

IDENTIFICATION STAMP
DIV. OF THE STATE ARCHITECT
APP: 02-123307 INC:
REVIEWED FOR
SS ☑ FLS ☑ ACS ☑
DATE: 10/15/2025

Owner:
WASHINGTON UNIFIED SCHOOL DISTRICT

WASHINGTON UNIFIED SCHOOL DISTRICT
6041 SOUTH ELM AVE.
FRESNO, CA 93706

Project Name:
STUDENT SERVICES

Project Address:
WASHINGTON UNION HIGH SCHOOL
6041 SOUTH ELM AVE,
Fresno, CA 93706

integrated designs
by SOMAM, Inc.

**ARCHITECTURE
ENGINEERING
INTERIOR DESIGN**

6011 N. FRESNO STREET, SUITE 130
FRESNO CALIFORNIA 93710
P:(559) 436-0881 F:(559) 436-0887
E: design@somam.com
integrateddesigns.com

Ownership of Documents
This document, the ideas and designs incorporated herein, as an instrument of Professional Service is the property of Integrated Designs by SOMAM Inc. and is not to be used, in whole or in part for any other project without written authorization.
© COPYRIGHT 2020

Stamp:

Sheet Title:
SITE SIGNALS PLAN - NEW

Job No.: **5613**

Sheet No.: **T1.11**

Release: DSA Issue Date: 04-23-25

Rose Sing Eastham & Associates
Electrical Consultants
131 S. Dunworth – (559)733-2671
Visalia, California 93292-6705

REGISTERED PROFESSIONAL ENGINEER
ROSE SING EASTHAM
No. E-18786
Exp. 6/30/27
ELECTRICAL
STATE OF CALIFORNIA

ROOM LEGEND					
#	ROOM NAME	#	ROOM NAME	#	ROOM NAME
101	LOBBY	118	OFFICE	135	BOOK STORAGE
102	RECEPTION	119	WAITING AREA	136	CAMPUS POLICE
103	ADMIN.	120	WAITING AREA	137	TOILET ROOM
104	ADMIN.	121	OFFICE	138	HALL
105	HALL	122	OFFICE	139	OFFICE
106	NURSE	123	OFFICE	140	OFFICE
107	TOILET ROOM	124	OFFICE	141	FIRE SPRINKLER RISER
108	TOILET ROOM	125	OFFICE	142	STAFF LOUNGE
109	WORKING ROOM	126	OFFICE	143	HALL
110	ARCHIVE STORAGE	127	DIRECTOR	144	JANITOR
111	PAPER STORAGE	128	HALL	145	TOILET ROOM
112	OFFICE	129	CONFERENCE	146	ELECTRICAL ROOM
113	OFFICE	130	CONFERENCE	147	
114	OFFICE	131	HALL	148	
115	OFFICE	132	DIRECTOR	149	WATER HEATER STORAGE
116	OFFICE	133	HALL		
117	OFFICE	134	MAIL PICK-UP		

NOTES (THIS SHEET ONLY):

1. NEW 'HC-X' CABINET, REFER TO DETAIL #1/T3.10.
2. DATA OUTLET, PROVIDE A MINIMUM OF 3 'CAT. 6' CABLES, JACK AND BLANK IN FOUR PORT SINGLE GANG PLATE. OUTLET BOX HALL BE 55 TYPE 2 7/8" DEEP, 1G TRIM RING, ONE 1 1/4"C TO ACCESSIBLE SPACE. DELTA # DENOTES NUMBER OF CABLES.
3. CEILING GRID MOUNTED WIRELESS AP. PROVIDE TWO 'CAT. 6' CABLES AND JACKS IN SURFACE BOX ABOVE GRID. LABEL GRID LOCATION AND OUTLET NUMBER ON GRID TEE.
4. INTRUSION DOOR CONTACT. PROVIDE ONE 'N' CABLE, ONE 3/4" C TO ACCESSIBLE SPACE. COORDINATE ROUGH-IN WITH ALL TRADES.
5. INTERCOM IP CLOCK. PROVIDE ONE CAT.6 CABLE IN SPECIAL BACK BOX (IP-FEST-HVP), ONE 1" C TO ACCESSIBLE SPACE.
6. OUTDOOR INTERCOM HORN. PROVIDE ONE CAT.6 CABLE IN SPECIAL BACK BOX (IP-FEST-HVP), ONE 1" C TO ACCESSIBLE SPACE.
7. CAMERA OUTLET. PROVIDE TWO 'CAT. 6' CABLES AND JACKS IN TWO PORT SURFACE BOX. OUTLET BOX SHALL BE 4 11/16" SQ TYPE 2 1/8" DEEP, 3/0 FIXTURE TRIM RING, ONE 1" C TO ACCESSIBLE SPACE. PROVIDE BLANK COVER.
8. INTRUSION MOTION OR GLASS BREAK DETECTOR. PROVIDE ONE '4A' CABLE IN LOW VOLTAGE RING ON GRID.
9. COORDINATE OUTLET WITH MILLWORK, ARCH. AND ELECT. PRIOR TO ROUGH-IN.
10. RUN TWO 3" CONDUITS TO IDF, ROUTE THROUGH WALLS AND SEAL WITH FIREPROOF MATERIAL. RUN CONCEALED ABOVE CEILING, REFER TO DETAIL #10/E7.03 FOR REQUIREMENTS.

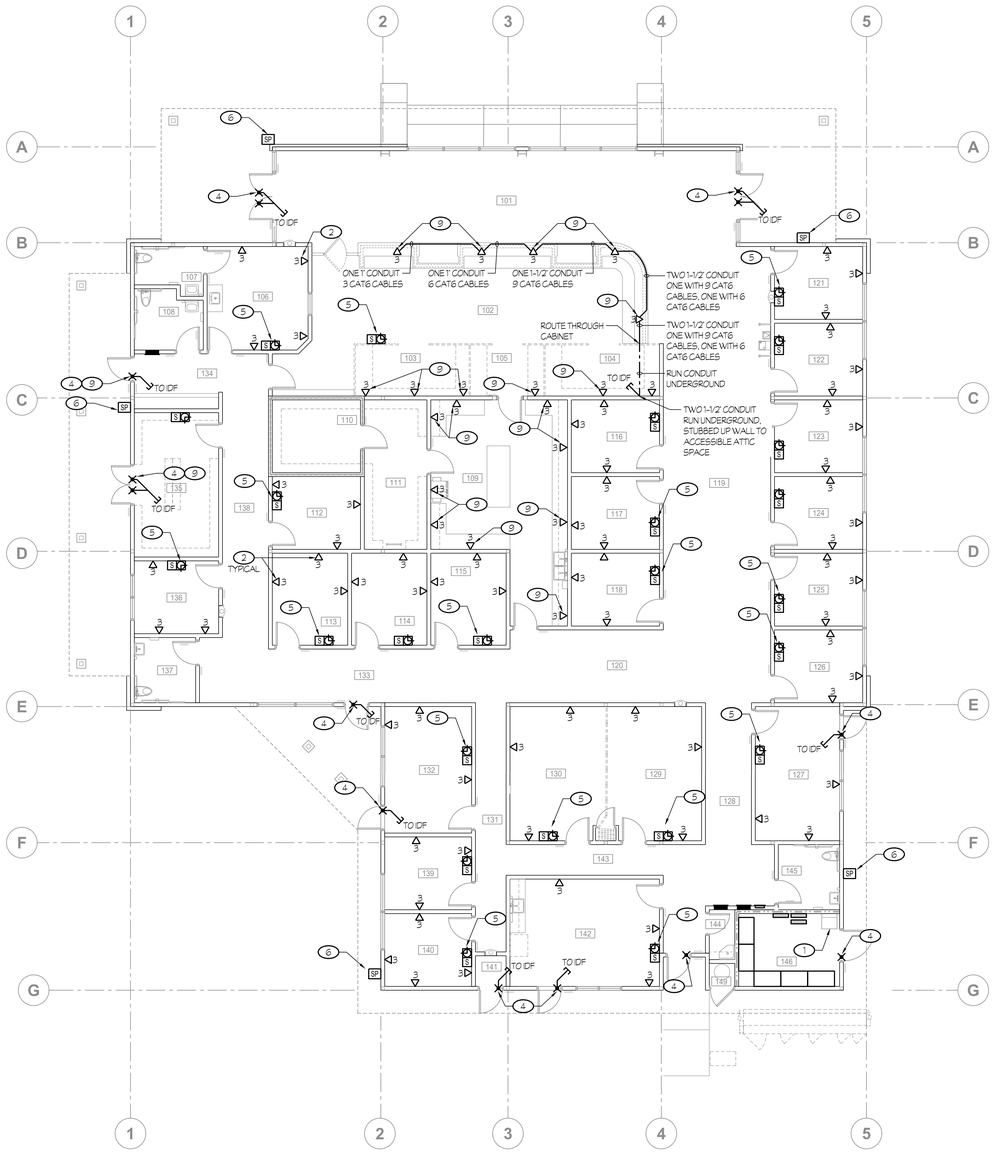

SIGNALS PLAN
STUDENT SERVICES

SCALE: 1/8" = 1'-0"

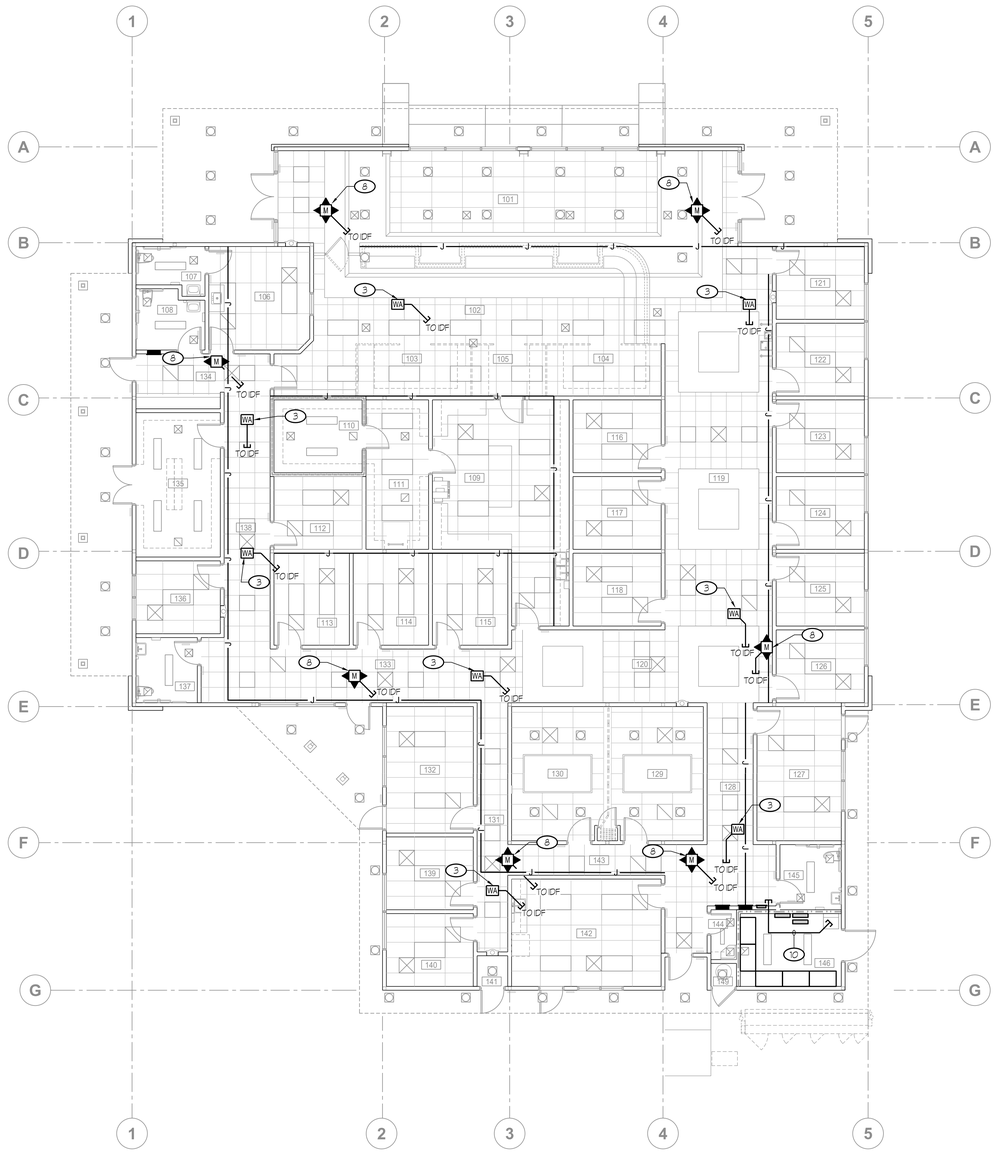

SIGNALS PLAN - CEILING
STUDENT SERVICES

SCALE: 1/8" = 1'-0"

Rose Sing Eastham & Associates
Electrical Consultants
131 S. Dunworth – (559)733-2671
Visalia, California 93292-6705

REGISTERED PROFESSIONAL ENGINEER — DAVID KIRK EASTHAM — No. E-18786 Exp. 6/30/27 — ELECTRICAL — STATE OF CALIFORNIA

IDENTIFICATION STAMP
DIV. OF THE STATE ARCHITECT
APP: 02-123307 INC:
REVIEWED FOR
SS ☑ FLS ☑ ACS ☑
DATE: 10/15/2025

Owner:
WASHINGTON UNIFIED SCHOOL DISTRICT

WASHINGTON UNIFIED SCHOOL DISTRICT
6041 SOUTH ELM AVE.
FRESNO, CA 93706

Project Name:
STUDENT SERVICES

Project Address:
WASHINGTON UNION HIGH SCHOOL
6041 SOUTH ELM AVE,
Fresno, CA 93706

integrated designs
by SOMAM, Inc.

ARCHITECTURE
ENGINEERING
INTERIOR DESIGN

6011 N. FRESNO STREET, SUITE 130
FRESNO CALIFORNIA 93710
P:(559) 436-0881 F:(559) 436-0887
E: design@somam.com
integrateddesigns.com

Ownership of Documents
This document, the ideas and designs incorporated herein, as an instrument of Professional Service is the property of Integrated Designs by SOMAM Inc. and is not to be used, in whole or in part for any other project without written authorization.
© COPYRIGHT 2020

Stamp:

Sheet Title:
SIGNALS PLAN

Job No.: **5613**

Sheet No.: **T2.10**

Release: DSA Issue Date: 04-23-25

Z:\Drafting\Jobs\REF\GUHSD\5Y\Fresno\Washington High School\5613 Washington Union HS - Student Services Bldg\01\Dwg DATE: 5/4/23 09/02/25 BY: LorenaSmith DATE PLOTTED: 09/19/25 JOB # 25-008-SE

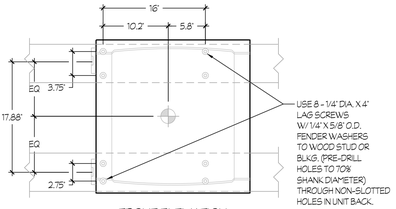

FRONT ELEVATION

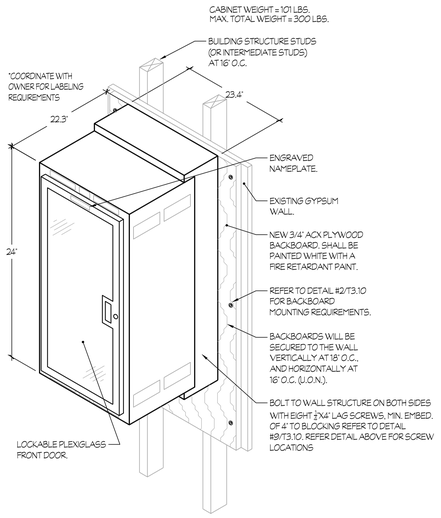

1 INTERMEDIATE DISTR. FRAME "I.D.F. #1 MOUNTING

NTS

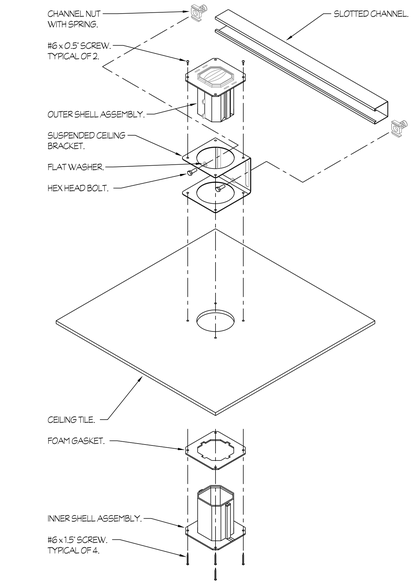

3 SMOKE AND ACOUSTICAL PATHWAY THROUGH CEILING KIT

NTS

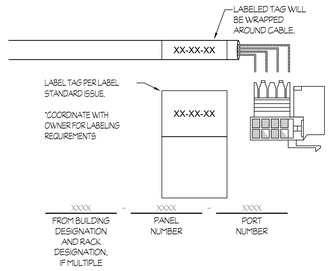

5 CABLE IDENTIFIER LABELING FORMAT

NTS

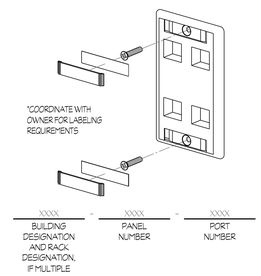

6 DATA OUTLET IDENTIFICATION MATRIX

NTS

ASSISTIVE LISTENING SYSTEMS

PROVIDE ASSISTIVE LISTENING AS REQUIRED BY CBC SECTIONS 118.219 & 118.708 AND ADA 708. REFER TO SPECIFICATIONS FOR CLASSROOMS SYSTEMS. REFER TO DETAIL DRAWINGS FOR INSTALLED SOLUTIONS. CLASSROOM SYSTEMS ARE TO BE PORTABLE "BRIEFCASE" STYLE FOR USE WHEN REQUESTED BY USERS.

SIGNALS SYSTEM EQUIPMENT AND CABLE LEGEND NOTES:

(1) COPPER CABLING SHALL BE TESTED IN ACCORDANCE WITH TIA/EIA 568C-2.1. FIBER OPTIC CABLING SHALL BE TESTED IN ACCORDANCE WITH TIA/EIA 455A AND TIA/EIA 568-C.3. SUBMIT ALL TEST REPORTS TO OWNER.

CABLE LEGEND/SPECIFICATIONS

CABLE	MANUFACTURER/CATALOG NO.	DESCRIPTION/SYSTEM(S)
'SM12'	BERKTEK # LTR012AB0403	12 STRAND SINGLE MODE FIBER OPTIC
'D'	BERKTEK # 10136342 'BLUE VOICE/DATA'	CAT. 6, 4 PAIR, 24 AWG COPPER
'D-WAP'	BERKTEK # 11085549 'GREEN WIRELESS'	CAT. 6A, 4 PAIR, 24 AWG COPPER
'1A2'	WEST PENN #220	2 COND., 22 AWG (DOOR CONTACT CABLE)
'1A4'	WEST PENN #240	4 COND., 22 AWG (DEVICE W/POWER CABLE)

SIGNALS / TELECOMMUNICATIONS APPLICABLE CODES AND STANDARDS

CODES:

2022 CALIFORNIA BUILDING CODE (C.B.C.)
2022 CALIFORNIA ELECTRICAL CODE (C.E.C.)

STANDARDS AND GUIDES:

NFPA 72 - NATIONAL FIRE ALARM CODE, 2022 EDITION (CALIFORNIA AMENDED)
ADAAG - AMERICANS WITH DISABILITIES ACT, ACCESSIBILITY GUIDELINES ASSISTIVE LISTENING SYSTEMS SECTION 708
ANSI/BICSI - TELECOMMUNICATIONS DISTRIBUTION METHODS MANUAL (TDMM), 13TH EDITION OR NEWER.
ANSI/BICSI 001-2017 - INFORMATION AND COMMUNICATION TECHNOLOGY SYSTEMS DESIGN AND IMPLEMENTATIONS BEST PRACTICES FOR EDUCATIONAL INSTITUTIONS AND FACILITIES.
ANSI/BICSI 005-2016 - ELECTRONIC SAFETY AND SECURITY (ESS) SYSTEM DESIGN AND IMPLEMENTATIONS BEST PRACTICES.

SIGNALS SYMBOLS

ALL DIMENSIONS TO TOP OF BOX, U.O.N.

	(1)	ELECTRICAL KEYNOTE #1, REFER TO NOTES ON SAME SHEET.
	U.O.N.	UNLESS OTHERWISE NOTED
		TERMINAL CABINET (SIZE AS SHOWN)
		SMOKE/FIRE CABLE SLEEVE THRU WALL.
		CONDUIT STUB - CAPPED AND LABELED.
		HOMERUN CONDUIT TO NEAREST CROSS CONNECT OR SOUND EQUIPMENT RACK
		CONDUIT SLEEVE
(A)	WA	DATA OUTLET 'A' CEILING WIRELESS ACCESS POINT (2 'CAT6' CABLES)
		COMBO TELEPHONE/DATA OUTLET IN WALL (+18" U.O.N.) (3 'CAT6' CABLES)
(C)	IC	INTERCOM CLOCK/SPEAKER COMBO (+84" U.O.N.) (ONE 'CAT6' CABLE)
(B)	S	INTERCOM SPEAKER, FLUSH MOUNTED IN WALL (+96" U.O.N.) OR HARD CEILING
	H	INTERCOM HORN, FLUSH MOUNTED IN WALL (+96" U.O.N.) (WEATHERPROOF)
(C)	K	INTRUSION ALARM KEY PAD (+48" U.O.N.)
(C)	M	INTRUSION ALARM PASSIVE INFRARED DETECTOR ON CEILING
(C)	S	INTRUSION ALARM SIREN, ON WALL (+9'-0 U.O.N.)
	IDF	IDF LOCATION
	TV	VIEWING MONITOR FOR VERKADA CAMERA SYSTEM.
	AVT	LOCAL HDMI TEACHER INPUT, MOUNTED IN WALL (+18" U.O.N.)
	AVL	LOCAL HDMI LOCAL INPUT, MOUNTED IN WALL (+18" U.O.N.)
	AVS	LOCAL HDMI SECONDARY OUTLET, MOUNTED BEHIND SECONDARY TV.
	AVM	LOCAL HDMI MAIN OUTPUT , MOUNTED BEHIND MAIN TV.

SIGNALS SYMBOLS NOTES:

(A) ELECTRICAL CONTRACTOR SHALL PROVIDE A 5" SQUARE x 2 7/8" DEEP OUTLET BOX WITH SINGLE GANG RAISED RING, DEPTH AS REQUIRED. UNLESS OTHERWISE NOTED, RUN 1 1/4"C FROM OUTLET BOX AND STUB INTO ACCESSIBLE ATTIC SPACE ABOVE T-BAR CEILING. PROVIDE AN INSULATING BUSHING, BRIDGEPORT #TWB-54 OR EQUAL, AT STUB.

(B) ELECTRICAL CONTRACTOR SHALL PROVIDE SPECIAL BACK BOX PER MFG.

(C) ELECTRICAL CONTRACTOR SHALL PROVIDE A 4-11/6" SQUARE x 2 1/8" DEEP OUTLET BOX WITH SINGLE GANG RAISED RING, DEPTH AS REQUIRED. UNLESS OTHERWISE NOTED, RUN 3/4"C FROM OUTLET BOX AND STUB INTO ACCESSIBLE ATTIC SPACE ABOVE T-BAR CEILING. PROVIDE AN INSULATING BUSHING, BRIDGEPORT #TWB-52 OR EQUAL, AT STUB.

(D) ELECTRICAL CONTRACTOR SHALL PROVIDE A 5" SQUARE x 2 7/8" DEEP OUTLET BOX WITH TWO- GANG RAISED RING, DEPTH AS REQUIRED. UNLESS OTHERWISE NOTED, RUN 1 1/4"C FROM OUTLET BOX AND STUB INTO ACCESSIBLE ATTIC SPACE ABOVE T-BAR CEILING. PROVIDE AN INSULATING BUSHING, BRIDGEPORT #TWB-54 OR EQUAL, AT STUB.

(E) ELECTRICAL CONTRACTOR SHALL PROVIDE A 5" SQUARE x 2 7/8" DEEP OUTLET BOX WITH SINGLE GANG RAISED RING, DEPTH AS REQUIRED.

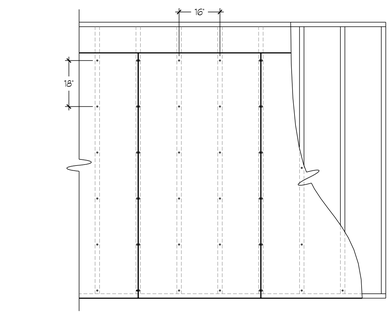

NOTES (THIS DETAIL ONLY):

1. BACKBOARDS SHALL BE 3/4" ACX PLYWOOD AND PAINTED WHITE WITH A FIRE RETARDANT PAINT.
2. BACKBOARDS SHALL BE ATTACHED TO THE BUILDING STRUCTURE STUDS WITH #8 x 2 1/2" LG. FLAT-HEAD PHILLIPS WOOD SCREWS. SCREW HEAD SHALL BE COUNTER SUNK TO BE FLUSH WITH THE FACE OF BACKBOARD.
3. BACKBOARDS WILL BE SECURED TO THE WALL VERTICALLY AT 18" O.C., AND HORIZONTALLY AT 16" O.C. (U.O.N.).
4. PROVIDE CUTOUTS FOR ALL DUPLEX AND/OR QUADRUPLEX RECEPTACLES.

2 PLYWOOD BACKBOARD MOUNTING DETAIL

NTS

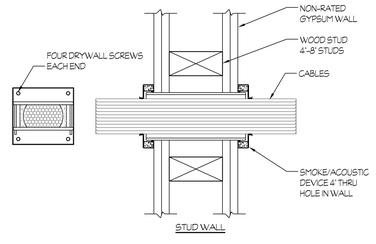

STUD WALL

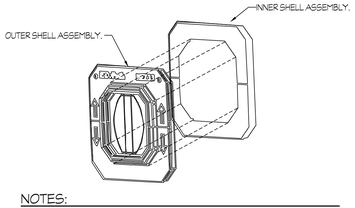

NOTES:

1. *Cables - Aggregate cross-sectional area of cables in the sleeve to be 0% to max. 60% of the aggregate cross-sectional area of the sleeve. When there is no cable fill, device cover is to be tightly closed. Cables to be rigidly supported on both sides of the wall assembly.*
2. *Smoke/Acoustic Device - Device to be installed in accordance with the accompanying installation instructions.*
3. 5TI FIRE STOP DEVICE # NEZDP233

4 SMOKE AND ACOUSTICAL PATHWAY THROUGH WALL KIT

NTS

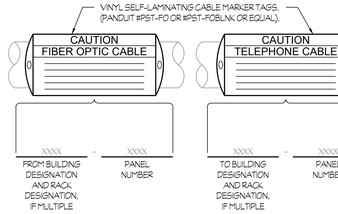

7 CABLE MARKER TAG

NTS

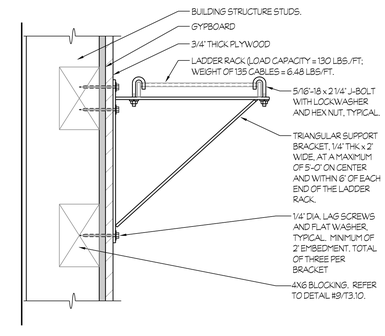

8 LADDER RACKING AT WALL

NTS

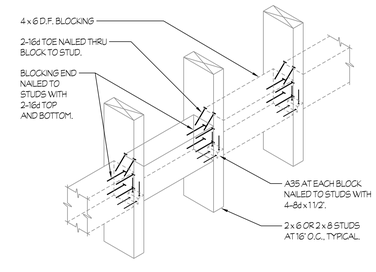

9 4 x 6 BLOCKING AT WALL

NTS

IDENTIFICATION STAMP
DIV. OF THE STATE ARCHITECT
APP: 02-123307 INC:
REVIEWED FOR
SS ☑ FLS ☑ ACS ☑
DATE: 10/15/2025

Owner:

WASHINGTON UNIFIED SCHOOL DISTRICT

WASHINGTON UNIFIED SCHOOL DISTRICT
6041 SOUTH ELM AVE.
FRESNO, CA 93706

Project Name:
STUDENT SERVICES

Project Address:
WASHINGTON UNION HIGH SCHOOL
6041 SOUTH ELM AVE,
Fresno, CA 93706

integrated designs
by SOMAM, Inc.

ARCHITECTURE
ENGINEERING
INTERIOR DESIGN

6011 N. FRESNO STREET, SUITE 130
FRESNO CALIFORNIA 93710
P:(559) 436-0881 F:(559) 436-0887
E: design@somam.com
integrateddesigns.com

Ownership of Documents
This document, the ideas and designs incorporated herein, as an instrument of Professional Service is the property of Integrated Designs by SOMAM Inc. and is not to be used, in whole or in part for any other project without written authorization.
© COPYRIGHT 2020

Stamp:

Sheet Title:
SIGNALS DETAILS

Job No.: **5613**

Sheet No.: **T3.10**

Release: DSA Issue Date: 04-23-25

Rose Sing Eastham & Associates
Electrical Consultants
131 S. Dunworth - (559)733-2671
Visalia, California 93292-6705

REGISTERED PROFESSIONAL ENGINEER ROBERT T. EASTHAM No. E-18786 Exp. 6/30/27 ELECTRICAL STATE OF CALIFORNIA

1" = 50'-0" 150 100 50 0 50
1" = 40'-0" 120 80 40 0 40
1" = 30'-0" 90 60 30 0 30
1" = 20'-0" 60 40 20 0 20
1/8" = 1'-0" 24 16 8 0 8
1/4" = 1'-0" 12 8 4 0 4

Z:\Drafting\Jobs\PDS\2024\05\Current\Washington High School\5613 Washington Union HS - Student Services Bldg\13 Dwg DATE SAED: 09/02/25 Dr: LorenSmith DATE PLOTTED: 09/19/25 JOB # 24-028-SE

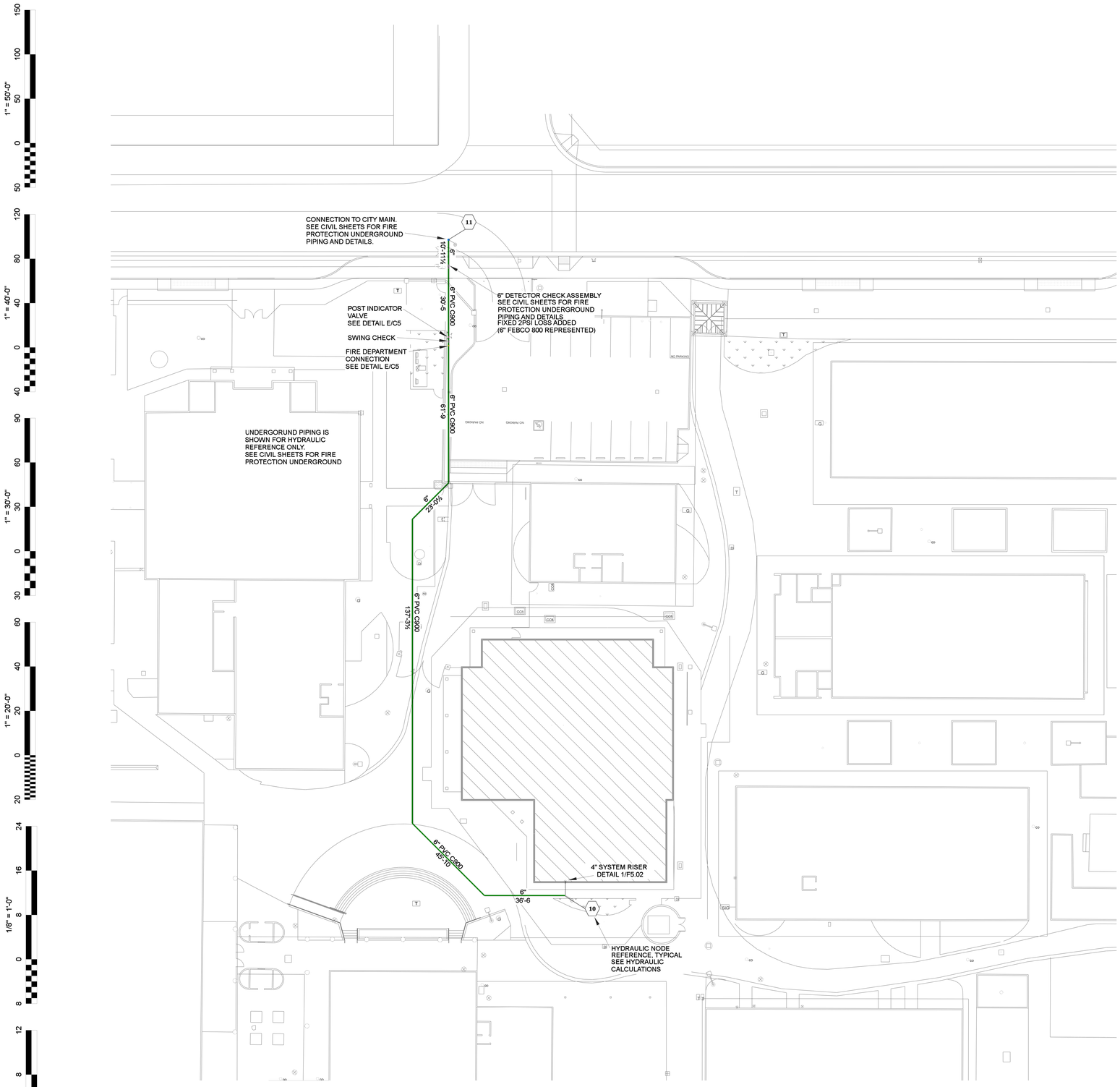

1" = 50'-0" 150 100 50 0 50

1" = 40'-0" 120 80 40 0 40

1" = 30'-0" 90 60 30 0 30

1" = 20'-0" 60 40 20 0 20

1/8" = 1'-0" 24 16 8 0 8

1/4" = 1'-0" 12 8 4 0 4

HYDRAULIC REFERENCE SITE PLAN

SCALE 1" = 20'-0

SPRINKLER SPECIFICATIONS

SYSTEM DESIGN:

1. SYSTEM SHALL BE DESIGNED TO CONFORM WITH NFPA 13 (2022), CBC (2022), AND LOCAL MUNICIPAL CODES.
2. SYSTEM TO BE AUTOMATIC WET PIPE SPRINKLER SYSTEM.
3. SPRINKLER DISCHARGE DENSITY SHALL BE A MINIMUM OF 0.10 GPM/SQFT FOR LIGHT HAZARD AREAS AND .20 FOR ORDINARY HAZARD AREAS.
4. SPRINKLER TEMPERATURE RATINGS SHALL BE 155° FOR ALL CONDITIONED AREAS AND 200° FOR NON-CONDITIONED AREAS
5. SPACING SHALL NOT EXCEED 225 SQFT IN LIGHT HAZARD AREAS, 130 SQFT IN ORDINARY HAZARD AREAS. 130 SQFT IN CONCEALED OBSTRUCTED AREAS.
6. BUILDING SHALL BE SUPPLIED AS SHOWN ON SITE PLAN.
7. FLOW DETECTOR AND TAMPER RESISTANT VALVES WILL BE SUPPLIED AND INSTALLED BY FIRE SPRINKLER CONTRACTOR AND WIRED BY ALARM CONTRACTOR.
8. FIRE SPRINKLER PIPING SHALL BE AS FOLLOWS (UNLESS NOTED OTHERWISE ON PLANS):
   A. PIPING 1¼" AND LARGER SHALL BE SCHEDULE 10 BLACK STEEL ROLLED FITTINGS.
   B. PIPING LESS THAN 1¼" SHALL BE SCHEDULE 40 BLACK THREADED FITTINGS.
9. HANGERS SHALL BE INSTALLED IN ACCORDANCE WITH NFPA 13 (2022). THE CUMULATIVE HORIZONTAL LENGTH OF AN UNSUPPORTED ARMOVER TO A SPRINKLER, SPRINKLER DROP, OR SPRING SHALL NOT EXCEED 24 IN. NFPA 13 (2022) §17.4.3.5.1
10. SPRINKLERS TO BE INSTALLED PER NFPA (2022) §10.2.6.1.2. SPRINKLER DEFLECTORS TO BE WITHIN 1"-6" BELOW STRUCTURAL MEMBERS AND A MAXIMUM DISTANCE OF 22" BELOW THE ROOF DECK/CEILING.
11. MICROBIAL INDUCED CORROSION WILL NOT BE A FACTOR FOR THIS SYSTEM.
12. ACCEPTANCE TEST IN ACCORDANCE WITH NFPA 13 (2022).

LIGHT HAZARD AREAS

1. ALL CLASSROOMS, EVENT CENTER, PLATFORM, OFFICE AREAS, CORRIDORS, BATHROOMS, ATTICS AND SIMILAR AREAS ARE LIGHT HAZARD. DENSITY 0.10 GPM/FT². MAXIMUM HEAD SPACING SHALL NOT EXCEED 15'X15'.
2. HOSE ALLOWANCE FOR LIGHT HAZARD SHALL BE 100 GPM.

ORDINARY HAZARD AREAS

1. MECHANICAL ROOMS, JANITOR ROOMS, KITCHENS, ELECTRICAL ROOMS, AND OTHER SIMILAR ROOM TYPES ARE ORDINARY HAZARD. SPRINKLER SPACING SHALL NOT EXCEED 130FT².
2. HOSE ALLOWANCE FOR ORDINARY HAZARD SHALL BE 250 GPM.

GENERAL NOTES

SPRINKLER SYSTEM DESIGNED IN ACCORDANCE WITH NFPA 13 (2022). ALL WORK TO BE DONE IN ACCORDANCE WITH THESE PLANS, STATE, LOCAL, AND NATIONAL CODES.

THESE DRAWINGS ARE SCHEMATIC IN NATURE, AND ARE NOT INTENDED TO SHOW EVERY MINOR DETAIL. THE CONTRACTOR SHALL FURNISH AND INSTALL ALL ITEMS REQUIRED FOR A COMPLETE ACCEPTABLE WORKING INSTALLATION.

CONTRACTOR TO BID SYSTEM AS DESIGNED (SCHEMATICALLY) BY THE DESIGNER. ANY ALTERNATE DESIGNS BY CONTRACTOR ARE TO BE SUBMITTED AND APPROVED BY ENGINEER PRIOR TO BIDDING. ANY DEVIATIONS FROM THE ORIGINAL DESIGN INTENTION SHALL BE CLOUDED AND NOTED ON SHOP DRAWINGS.

GENERAL CONTRACTOR IS SOLELY RESPONSIBLE FOR INSURING ALL SUB-CONTRACTOR'S COORDINATE SHOP DRAWINGS PRIOR TO ORDERING OR INSTALLATION OF ANY EQUIPMENT, DEVICE, MATERIAL, AND ETC. SUBMISSION OF SHOP DRAWINGS TO THE ENGINEER OF RECORD CONSTITUTES THAT THE DRAWINGS SUBMITTED HAVE BEEN COORDINATED AMONGST THE TRADES. FAILURE TO COORDINATE SHOP DRAWINGS DOES NOT CONSTITUTE A CHANGE ORDER TO THE OWNER.

ANY COORDINATION ITEMS THAT ARISE FROM COORDINATION OF TRADES SHALL EITHER BE HANDLED IN THE FIELD AND SHOWN ON THE AS-BUILTS, OR SHALL BE PROVIDED TO THE ARCHITECT BY RFI DETAILING COORDINATION ISSUE AND PROPOSED SOLUTION. COORDINATION ISSUES THAT ARISE AFTER DRAWINGS ARE APPROVED SHALL BE SHOWN ON THE AS-BUILTS.

CONTRACTOR TO PROVIDE SIX (6) SETS OF THE FOLLOWING:

A. COORDINATED SHOP DRAWINGS INCLUDING ALL CUT LENGTHS.
B. BOUND SUBMITTALS INCLUDING COVER PAGE, PIPING, HARDWARE, AND MATERIALS (INCLUDING FIRE STOPPING). COVER PAGE TO INCLUDE PROJECT NAME, SPRINKLER CONTRACTOR, GENERAL CONTRACTOR, ARCHITECT, AND DATE SUBMITTED FOR REVIEW.

ALL ITEMS REQUIRED BY NFPA 13 (2022) CHAPTER 28 (FOR WORKING DRAWINGS) SHALL BE PROVIDED ON THE SHOP DRAWINGS, SUBMITTALS ARE IN ADDITION AND NOT IN LIEU OF THIS REQUIREMENT.

ACTUAL SPACING FOR SPRINKLER PIPING AND HEADS MAY VARY WITH FIELD COORDINATION ISSUES, BUT SHALL MEET MINIMUM REQUIREMENTS OF NFPA 13 (2022).

ALL HANGERS, THREADED ROD, AND HARDWARE SHALL BE HOT DIPPED GALVANIZED.

ALL UNDERGROUND PVC, C-900, OR OTHER PLASTIC PIPING IS UTILIZED SHALL BE EQUIPPED WITH A SUITABLE MAGNETIC LOCATOR TAPE INSTALLED APPROPRIATELY TO THE TOP OF THE PIPING.

HEADS ARE TO BE LOCATED CENTER TILE (OR AS SHOWN) ACCORDING TO INDUSTRY STANDARDS AND PRACTICES.

SHOP DRAWINGS SHALL DESIGNATE THE TYPE AND LOCATION OF EACH RESTRAINT AND SHALL BE ACCOMPANIED BY A DETAIL AND CALCULATIONS IN ACCORDANCE WITH NFPA

ANY SUBSTITUTION OF "FLEXIBLE" TYPE PIPING IN LIEU OF "RIGID" PIPE OR ANY CHANGES TO SIZE, MANUFACTURER OR LENGTHS OF "FLEXIBLE" TYPE PIPING WILL REQUIRED RESUBMITTAL OF PIPING PLANS, PRODUCT DATA SHEETS AND HYDRAULIC CALCULATIONS TO DSA FLS FOR REVIEW AND APPROVAL.

CAL FIRE SINCE 1885 — FRESNO COUNTY FIRE
PROTECTION DISTRICT

210 South Academy Avenue
Sanger, California 93657
Telephone: (559) 493-4359
Fax: (559) 875-7451
www.fresnocountyfire.org

WATER FLOW REQUEST

This form is to be used by fire sprinkler contractors to request the water flow for the project location specified. Complete Section 1 and send to Fresno County Fire Protection District. This form, with both Sections 1 and 2 completed, must be submitted to Fresno County Fire Protection District with the fire sprinkler plans.

SECTION 1

REPORT DATE: 2/12/2025	COMPANY REQUESTING FLOW INFORMATION: INTEGRATED DESIGNS	
COMPANY ADDRESS: 6011 N. Fresno St Suite 130	CITY: Fresno	STATE: CA
COMPANY PHONE NUMBER: 559-436-0881	FAX NUMBER: 559-436-0887	
CONTACT PERSON: Efrain Gaeta	EMAIL: *(Contact Person)* egaeta@somam.com	
PROJECT NAME: WUHS – Student Services	PROJECT LOCATION: Washington Union High School	
STREET WHERE WATER SERVICE WILL BE OBTAINED FROM: Washington Union High School (On Campus)		

Do not write below this line – To be completed by Fresno County Fire Protection District

SECTION 2

LOCATION OF TESTED HYDRANT: Washington Union High School (On Campus)		
DATE HYDRANT FLOWED: 2/13/2025	TIME HYDRANT FLOWED: 1530	HYDRANT NUMBER or ID: N/A
STATIC: 54 PSI	RESIDUAL: 45 PSI	PITOT: 35 PSI
FLOW: 2035 GPM @ 20 PSI	COMMENTS:	
INFORMATION SENT BY: ☐ Fax ☐ Phone ☐ Mail • E-Mail By: John Blalock Date: 2/18/2025		

IDENTIFICATION STAMP
DIV. OF THE STATE ARCHITECT
APP: 02-123307 INC:
REVIEWED FOR
SS ☑ FLS ☑ ACS ☑
DATE: 10/15/2025

Owner:

WASHINGTON UNIFIED SCHOOL DISTRICT

WASHINGTON UNIFIED SCHOOL DISTRICT
6041 SOUTH ELM AVE, FRESNO, CA 93706

Project Name:

STUDENT SERVICES

Project Address:

WASHINGTON UNION HIGH SCHOOL
6041 SOUTH ELM AVE, FRESNO, CA 93706

integrated designs
by SOMAM, Inc.

ARCHITECTURE
ENGINEERING
INTERIOR DESIGN

6011 N. FRESNO STREET, SUITE 130
FRESNO CALIFORNIA 93710
P:(559) 436-0881 F:(559) 436-0887
E: design@somam.com
integrateddesigns.com

Ownership of Documents

This document, the ideas and designs incorporated herein, as an instrument of Professional Service is the property of Integrated Designs by SOMAM Inc. and is not to be used, in whole or in part for any other project without written authorization.
© COPYRIGHT

Stamp:

REGISTERED PROFESSIONAL ENGINEER
JOE LON D. CHINN
No. 35784
Exp. 09-31-26
MECHANICAL
STATE OF CALIFORNIA

Sheet Title:

HYDRAULIC REFERENCE SITE

Job No.: **5613**

Sheet No.: **F1.01**

Release: V2 Date:

Sprinkler Legend										
Symbol	Manufacturer	SIN	Model	Quantity	K-Factor	Type	Size	Response	Finish	Temperature	Note
⊗	Tyco	TY3131	TY-FRB	104	5.6	Upright	½	Quick	Brass	200°F	
●	Tyco	TY3231		91	5.6	Pendent	½	Quick	Chrome	155°F	
●	Tyco	TY3231	TY-FRB	1	5.6	Pendent	½	Quick	Chrome	200°F	
				Total = 196							

Hydraulic Information	
Remote Area 1	
OCCUPANCY CLASSIFICATION	Light Hazard
DENSITY (gpm/ft²)	0.100 for 1500.00ft² (Actual 1551.69ft²)
TOTAL HOSE STREAMS	100.00
TOTAL HEADS FLOWING	18
K-FACTOR	5.6
TOTAL WATER REQUIRED	541.54
TOTAL PRESSURE REQUIRED	45.301
SAFETY MARGIN (psi)	+5.767 (11.3%)

SYMBOL LEGEND	
SYMBOL	DESCRIPTION
	LATERAL SEISMIC BRACE (PERPENDICULAR)
	LONGITUDINAL SEISMIC BRACE (PARALLEL)
	4-WAY SEISMIC BRACE (PARALLEL/PERPENDICULAR)
	LINE RESTRAINT
	PIPE HANGERS
	PENDENT SPRINKLER
	UPRIGHT SPRINKLER
XX	HYDRAULIC NODE
	FIRE PIPING

1" = 50'-0" 150 100 50 0 50

1" = 40'-0" 120 80 40 0 40

1" = 30'-0" 90 60 30 0 30

1" = 20'-0" 60 40 20 0 20

1/8" = 1'-0" 24 16 8 0 8

1/4" = 1'-0" 12 8 4 0 4

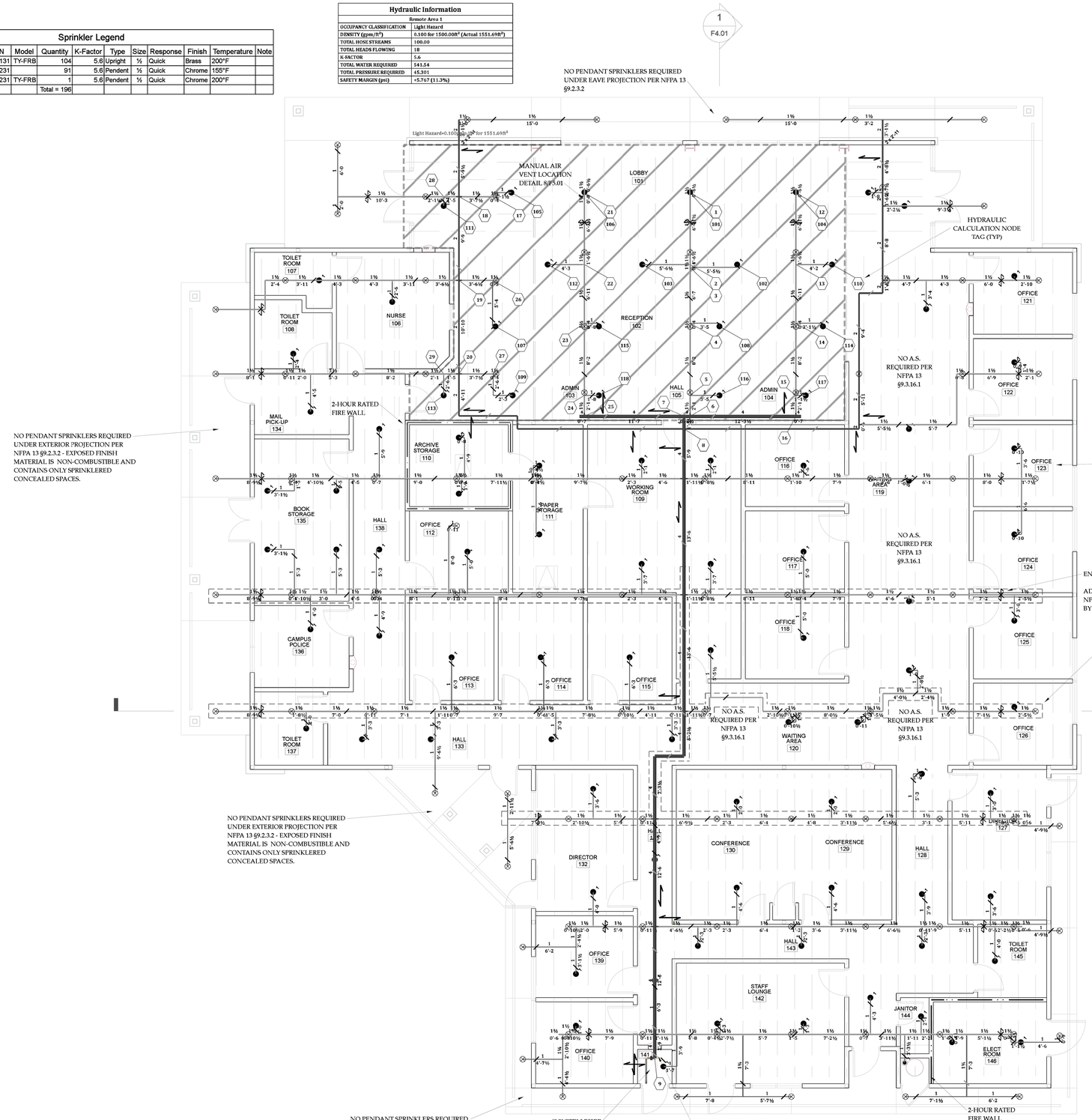

FIRE SPRINKLER PIPING PLAN

STUDENT SERVICES

SCALE: 3/16" = 1'

IDENTIFICATION STAMP
DIV. OF THE STATE ARCHITECT
APP: 02-123307 INC:
REVIEWED FOR
SS ☑ FLS ☑ ACS ☑
DATE: 10/15/2025

Owner:

WASHINGTON UNIFIED SCHOOL DISTRICT

WASHINGTON UNIFIED SCHOOL DISTRICT

6041 SOUTH ELM AVE,
FRESNO, CA 93706

Project Name:

STUDENT SERVICES

Project Address:

WASHINGTON UNION HIGH SCHOOL

6041 SOUTH ELM AVE,
FRESNO, CA 93706

integrated designs
by SOMAM, Inc.

ARCHITECTURE
ENGINEERING
INTERIOR DESIGN

6011 N. FRESNO STREET, SUITE 130
FRESNO CALIFORNIA 93710
P:(559) 436-0861 F:(559) 436-0887
E: design@somam.com
integrateddesigns.com

Ownership of Documents

This document, the ideas and designs incorporated herein, as an instrument of Professional Service is the property of Integrated Designs by SOMAM Inc. and is not to be used, in whole or in part for any other project without written authorization

© COPYRIGHT

Stamp:

REGISTERED PROFESSIONAL ENGINEER
JOEL D. CHIN
No. 35784
Exp. 03-31-26
MECHANICAL
STATE OF CALIFORNIA

Sheet Title:

FIRE SPRINKLER PIPING PLAN

Job No.:

5613

Sheet No.:

F2.01

Release: V2 Date:

SYMBOL LEGEND	
SYMBOL	DESCRIPTION
●	PENDENT SPRINKLER
⊗	UPRIGHT SPRINKLER

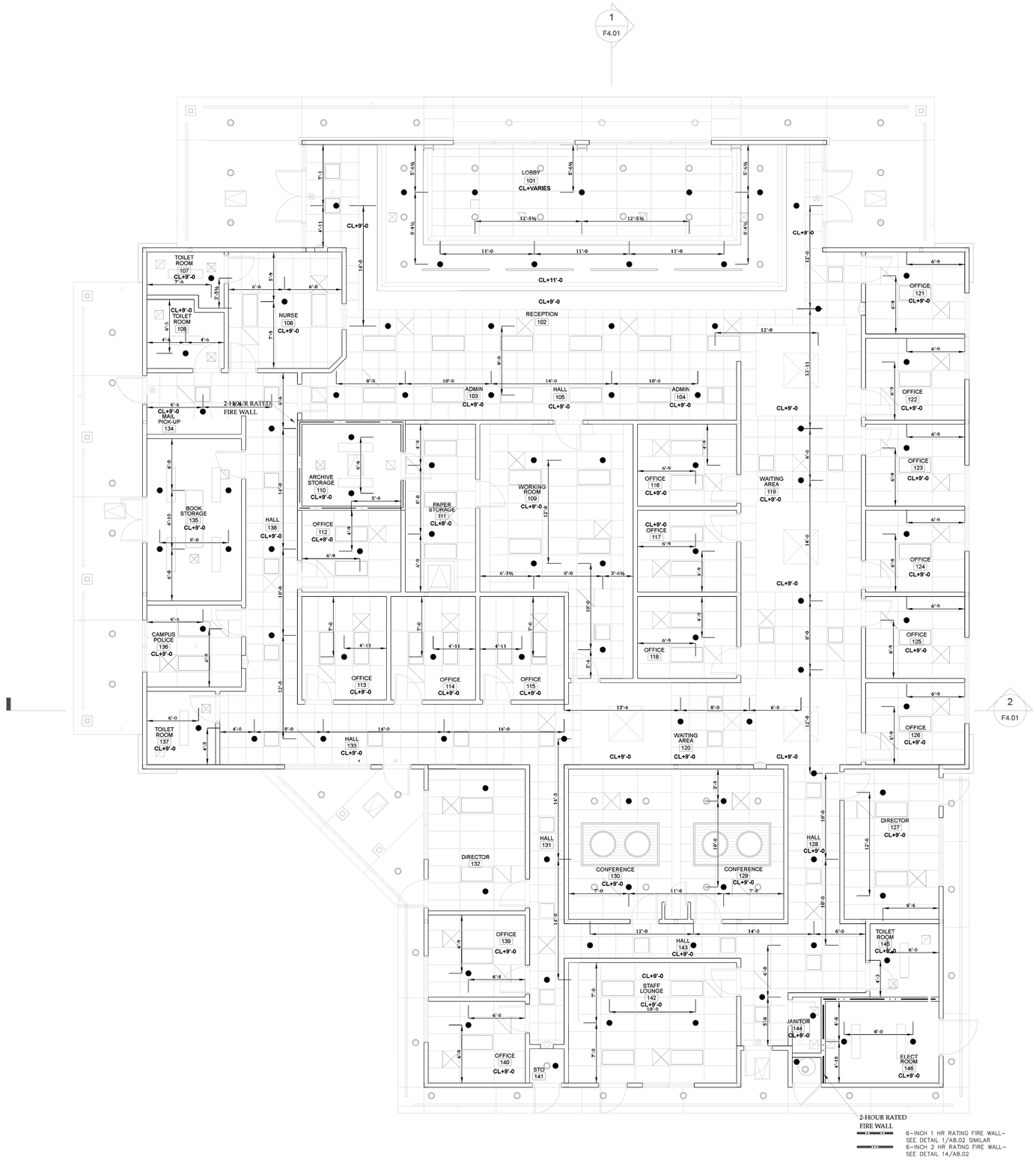

1" = 50'-0" 1" = 40'-0" 1" = 30'-0" 1" = 20'-0" 1/8" = 1'-0" 1/4" = 1'-0"

FIRE SPRINKLER CEILING PLAN

EVENT CENTER

SCALE: 3/16" = 1'

IDENTIFICATION STAMP
DIV. OF THE STATE ARCHITECT
APP: 02-123307 INC:
REVIEWED FOR
SS ☑ FLS ☑ ACS ☑
DATE: 10/15/2025

Owner:

WASHINGTON UNIFIED SCHOOL DISTRICT

6041 SOUTH ELM AVE, FRESNO, CA 93706

Project Name:

STUDENT SERVICES

Project Address:

WASHINGTON UNION HIGH SCHOOL

6041 SOUTH ELM AVE, FRESNO, CA 93706

integrated designs
by SOMAM, Inc.

ARCHITECTURE
ENGINEERING
INTERIOR DESIGN

6011 N. FRESNO STREET, SUITE 130
FRESNO CALIFORNIA 93710
P:(559) 436-0881 F:(559) 436-0887
E: design@somam.com
integrateddesigns.com

Ownership of Documents

This document, the ideas and designs incorporated herein, as an instrument of Professional Service is the property of Integrated Designs by SOMAM Inc. and is not to be used, in whole or in part for any other project without written authorization.

© COPYRIGHT

Stamp:

REGISTERED PROFESSIONAL ENGINEER
ODELON D. CHING
No. 35784
Exp. 03-31-26
MECHANICAL
STATE OF CALIFORNIA

Sheet Title:

FIRE SPRINKLER CEILING PLAN

Job No.:

5613

Sheet No.:

F3.01

Release: V2 Date:

SECTION NOTES:

1. PENDENT SPRINKLER
2. UPRIGHT SPRINKLER DEFLECTORS ALIGNED PARALLEL TO ROOF SLOPE
3. SCHEDULE 10 MAIN PIPING
4. SCHEDULE 10 BRANCHLINE PIPING
5. SCHEDULE 40 ARM-OVER PIPING
6. SCHEDULE 40 DROP PIPING
7. INSULATION
8. SHEETROCK CEILING
9. 3/4" THICK EXTERIOR CEMENT PLASTER
10. SUSPENDED ACOUSTIC CEILING TILE
11. UPRIGHT SPRINKLER

1" = 50'-0" 150 100 50 0 50

1" = 40'-0" 120 80 40 0 40

1" = 30'-0" 90 60 30 0 30

1" = 20'-0" 60 40 20 0 20

1/8" = 1'-0" 24 16 8 0 8

1/4" = 1'-0" 12 8 4 0 4

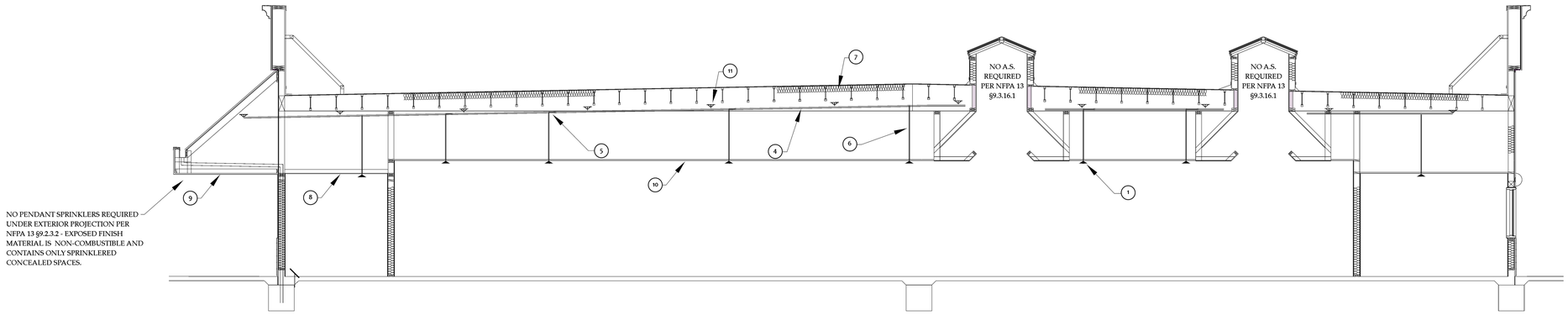

2 F4.01 **BUILDING SECTION DRAWING**

SCALE: ¼" = 1'

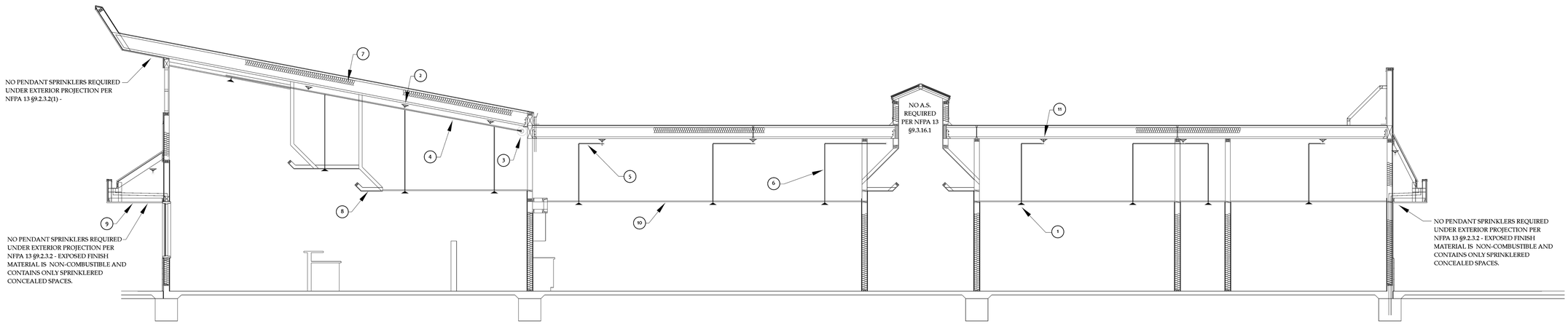

1 F4.01 **BUILDING SECTION DRAWING**

SCALE: ¼" = 1'

IDENTIFICATION STAMP
DIV. OF THE STATE ARCHITECT
APP: 02-123307 INC:
REVIEWED FOR
SS ☑ FLS ☑ ACS ☑
DATE: 10/15/2025

Owner:

WASHINGTON UNIFIED SCHOOL DISTRICT

6041 SOUTH ELM AVE, FRESNO, CA 93706

Project Name:

STUDENT SERVICES

Project Address:

WASHINGTON UNION HIGH SCHOOL

6041 SOUTH ELM AVE, FRESNO, CA 93706

integrated designs
by SOMAM, Inc.

ARCHITECTURE
ENGINEERING
INTERIOR DESIGN

6011 N. FRESNO STREET, SUITE 130
FRESNO CALIFORNIA 93710
P:(559) 436-0881 F:(559) 436-0887
E: design@somam.com
integrateddesigns.com

Ownership of Documents

This document, the ideas and designs incorporated herein, as an instrument of Professional Service is the property of Integrated Designs by SOMAM Inc. and is not to be used, in whole or in part for any other project without written authorization.

© COPYRIGHT

Stamp:

REGISTERED PROFESSIONAL ENGINEER
ODELON D. CHING
No. 35784
Exp. 03-31-26
MECHANICAL
STATE OF CALIFORNIA

Sheet Title:

BUILDING SECTION

Job No.:

5613

Sheet No.:

F4.01

Release: V2 Date:

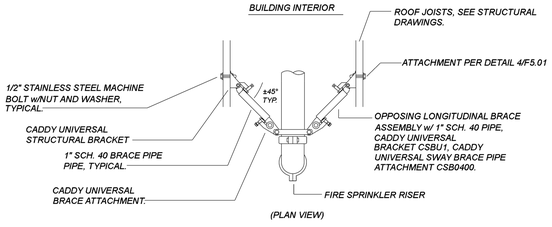

1 F5.01 4-WAY BRACE DETAIL AT RISER PIPING

SCALE: NONE

DETAIL KEY NOTES:

1. SPRINKLER MAIN PER PLAN.
2. CADDY UNIVERSAL SWAY BRACE.
3. 1" SCH. 40 SWAY PIPE BRACE. ATTACH TO UPPER STRUCTURAL DETAIL 4/F5.01

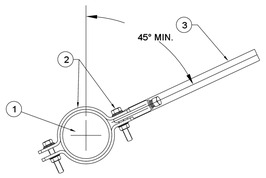

SYMBOL

2 F5.01 LATERAL SWAY BRACING

SCALE: NONE

DETAIL KEY NOTES:

1. SPRINKLER MAIN PER PLAN.
2. CADDY UNIVERSAL SWAY BRACE.
3. 1" SCH. 40 SWAY PIPE BRACE. ATTACH TO UPPER STRUCTURAL DETAIL 4/F5.01

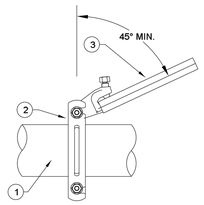

SYMBOL

3 F5.01 LONGITUDINAL SWAY BRACING

SCALE: NONE

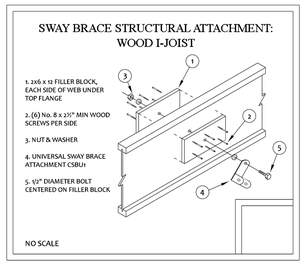

4 F5.01 BRACE ATTACHMENT

SCALE: NONE

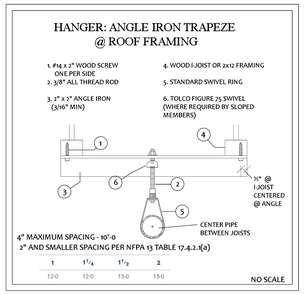

TRAPEZE MODULUS CALCULATION	
SPAN INFORMATION	
2.00	Length of Trapeze (in Feet)
1.00	Location of Point Load
TRAPEZE MATERIAL	
ANGLE IRON	Trapeze Material Type
2"x2"x3/16"	Trapeze Size/Depth
0.19 in³	Section Modulus of Trapeze Material
PIPE TO BE SUPPORTED	
SCH. 10	Piping Material to be Supported
4 inch	Maximum Size of Pipe being supported
11.78	Weight per Foot
15-0	Length of Pipe (NFPA Tables are based on 15-feet of pipe)
426.7	Adjusted Point Load (1.0 Safety Factor plus an additional 250lb load)
MIN REQ'D MODULUS	
0.1706 in³	Minimum Required Section Modulus for a maximum allowable bending stress of 15 kpsi with the adjusted trapeze length and point load location.

5 F5.01 MAIN HANGER

SCALE: NONE

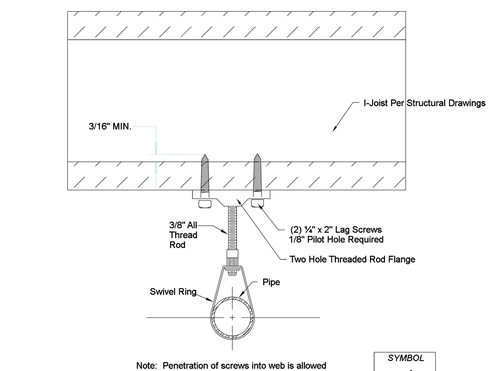

6 F5.01 BRANCH HANGER @ WOOD FRAMING

SCALE: NONE

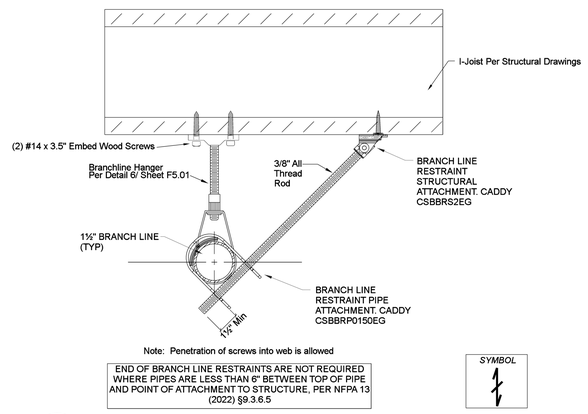

7 F5.01 END OF LINE RESTRAINT

SCALE: NONE

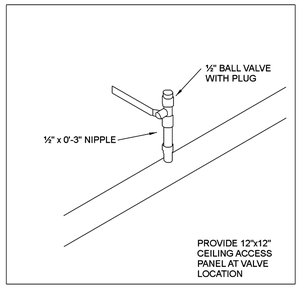

8 F5.01 SYSTEM AIR VENT

SCALE: NONE

IDENTIFICATION STAMP
DIV. OF THE STATE ARCHITECT
APP: 02-123307 INC:
REVIEWED FOR
SS ☑ FLS ☑ ACS ☑
DATE: 10/15/2025

Owner:

WASHINGTON UNIFIED SCHOOL DISTRICT

6041 SOUTH ELM AVE, FRESNO, CA 93706

Project Name:

STUDENT SERVICES

Project Address:

WASHINGTON UNION HIGH SCHOOL

6041 SOUTH ELM AVE, FRESNO, CA 93706

integrated designs
by SOMAM, Inc.

ARCHITECTURE
ENGINEERING
INTERIOR DESIGN

6011 N. FRESNO STREET, SUITE 130
FRESNO CALIFORNIA 93710
P:(559) 436-0881 F:(559) 436-0887
E: design@somam.com
integrateddesigns.com

Ownership of Documents
This document, the ideas and designs incorporated herein, as an instrument of Professional Service is the property of Integrated Designs by SOMAM Inc. and is not to be used, in whole or in part for any other project without written authorization.
© COPYRIGHT

Stamp:

REGISTERED PROFESSIONAL ENGINEER
JOECOND D. CHUNG
No. 35784
Exp. 03-31-26
MECHANICAL
STATE OF CALIFORNIA

Sheet Title:

DETAILS

Job No.: **5613**

Sheet No.: **F5.01**

Release: V2 Date:

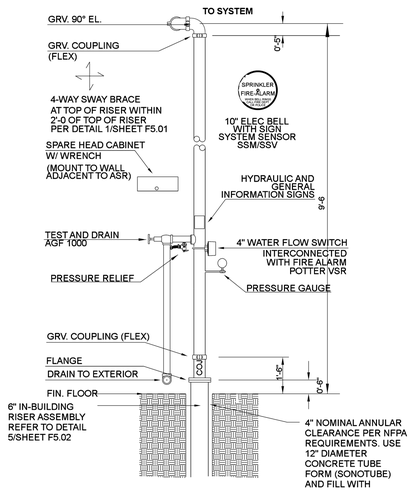

1 F5.02 **4" SYSTEM RISER**

SCALE: NONE

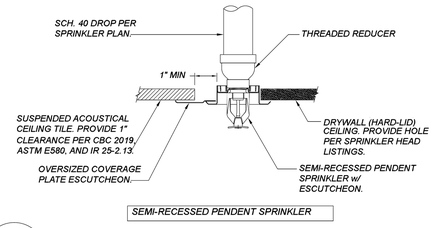

3 F5.02 *SPRINKLER HEAD INSTALLATION DETAIL*

SCALE: NONE

NOTES:

1. WALL ASSEMBLY - THE 1 OR 2 HR FIRE-RATED WALLBOARD/STUD WALL ASSEMBLY SHALL BE CONSTRUCTED OF THE MATERIALS AND IN THE SPECIFIED IN THE INDIVIDUAL U300 OR U400 SERIES AND PARTITION DESIGNS IN THE UL FIRE DIRECTORY AND SHALL INCLUDE THE CONSTRUCTION FEATURES:
   A. STUDS - WALL FRAMING MAY CONSIST OF EITHER STUDS OR STEEL CHANNEL STUDS. WOOD STUDS CONSIST OF NOMINAL 2"x4" LUMBER SPACED 16" STEEL STUDS TO BE MIN. 2-1/2" WIDE AND SPACED 24" OC. WHEN STEEL STUDS ARE USED AND THE DIAMETER OF OPENING EXCEEDS THE WIDTH OF CAVITY, THE OPENING SHALL BE FRAMED ON ALL USING LENGTHS OF STEEL STUD INSTALLED THE VERTICAL STUDS AND SCREW-ATTACHED TO THE STEEL STUDS AT EACH END. THE FRAMED OPENING THE WALL SHALL BE 4"-6" WIDER AND 4"-6" HIGHER THE DIAMETER OF THE PENETRATING ITEM SUCH WHEN THE PENETRATING ITEM IS INSTALLED IN OPENING, A 2"-3" CLEARANCE IS PRESENT BETWEEN PENETRATING ITEM AND THE FRAMING ON ALL SIDES.
   B. GYPSUM BOARD* - 5/8" THICK, 4' WIDE WITH SQUARE TAPERED EDGES. THE GYPSUM BOARD TYPE, THICKNESS, NUMBER OF LAYERS, FASTENER TYPE SHEET ORIENTATION SHALL BE AS SPECIFIED IN INDIVIDUAL U300 OR U400 SERIES DESIGN IN THE UL RESISTANCE DIRECTORY. MAX DIAMETER OF OPENING 32-1/4" FOR STEEL STUD WALLS. MAX. DIAMETER OPENING IS 14-1/2" FOR WOOD STUD WALLS. THE RATING OF THE FIRESTOP SYSTEM IS EQUAL TO FIRE RATING OF THE WALL ASSEMBLY.
2. THROUGH-PENETRANTS - ONE METALLIC PIPE, CONDUIT TUBING TO BE INSTALLED EITHER CONCENTRICALLY ECCENTRICALLY WITHIN THE FIRESTOP SYSTEM. ANNULAR SPACE SHALL BE MIN. 0" TO MAX 2-1/4" PIPE BE INSTALLED WITH CONTINUOUS POINT CONTACT. CONDUIT OR TUBING MAY BE INSTALLED AT AN ANGLE GREATER THAN 45° FROM PERPENDICULAR. PIPE, OR TUBING TO BE RIGIDLY SUPPORTED ON BOTH SIDES WALL ASSEMBLY. THE FOLLOWING TYPES AND SIZES METALLIC PIPES, CONDUITS OR TUBING MAY BE
   A. STEEL PIPE - NOMINAL 30"Ø (OR SMALLER) SCHEDULE (OR HEAVIER) STEEL PIPE.
   B. IRON PIPE - NOMINAL 30"Ø (OR SMALLER) CAST DUCTILE IRON PIPE.
   C. CONDUIT - NOMINAL 4"Ø (OR SMALLER) ELECTRICAL METALLIC TUBING OR 6 IN. DIAMETER CONDUIT.
   D. COPPER TUBING - NOMINAL 6"Ø (OR SMALLER) TYPE (OR HEAVIER) COPPER TUBING.
   E. COPPER PIPE - NOMINAL 6"Ø (OR SMALLER) (OR HEAVIER) COPPER PIPE.
3. FILL, VOID OR CAVITY MATERIAL* - SEALANT - MIN. THICKNESS OF FILL MATERIAL APPLIED WITHIN ANNULUS. FLUSH WITH BOTH SURFACES OF WALL. AT POINT OR CONTINUOUS CONTACT LOCATIONS PIPE AND WALL, A MIN. 1/2"Ø BEAD OF FILL MATERIAL BE APPLIED AT THE PIPE WALL INTERFACE ON SURFACES OF WALL.

PIPE CLEARANCE NOTES:

1. PER NFPA 13 (2022) 18.4.1 - CLEARANCE SHALL BE PROVIDED AROUND ALL PIPING EXTENDING THROUGH WALLS, FLOORS, PLATFORMS, AND FOUNDATIONS, INCLUDING DRAINS, FIRE DEPARTMENT CONNECTIONS, AND OTHER AUXILIARY PIPING.
2. PER NFPA 13 (2022) 18.4.2 - WHERE PIPE PASSES THROUGH HOLES IN PLATFORMS, FOUNDATIONS, WALLS, OR FLOORS, THE HOLES SHALL BE SIZED SUCH THAT THE DIAMETER OF THE HOLES IS NOMINALLY 2" LARGER THAN THE PIPE FOR IPE 1" NOMINAL TO 3-1/2" NOMINAL AND 4" LARGER THAN THE PIPE FOR PIPE 4" NOMINAL AND LARGER.
3. PER NFPA 13 (2022) 18.4.4 - NO CLEARANCE SHALL BE REQ'D FOR PIPING PASSING THROUGH GYPSUM BOARD OR EQUALLY FRANGIBLE CONSTRUCTION THAT IS NOT REQ'D TO HAVE A FIRE RESISTANCE RATING.

SYSTEM NO. W-L-1054

F RATINGS - 1 AND 2 HR (SEE ITEMS 1 AND 3)
T RATING - 0 HR
L RATING AT AMBIENT - LESS THAN 1 CFM/SQ FT
L RATING AT 400 F-4 CFM/SQ FT

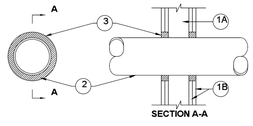

SECTION A-A

4 F5.02 **FIRESTOP DETAIL**

SCALE: NONE

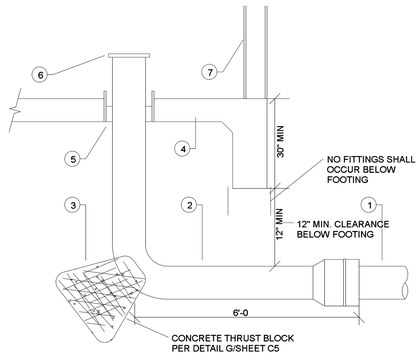

DETAIL KEY NOTES:

1. FIRE SERVICE PIPING PER CIVIL SHEET SHEETS
2. 6" STAINLESS STEEL IN-BUILDING RISER ASSEMBLY AMES SERIES IBR IN-BUILDING RISER 6"
3. CONCRETE THRUST BLOCK PER CIVIL DRAWINGS
4. CONCRETE SLAB PER ARCHITECTURAL PLAN.
5. 4" NOMINAL ANNULAR CLEARANCE PER NFPA REQUIREMENTS. USE 12" DIAMETER CONCRETE TUBE FORM (SONOTUBE) AND FILL WITH PEA-SIZED GRAVEL.
6. OVERHEAD SPRINKLER SYSTEM POINT OF CONNECTION - 6" FLANGE
7. EXTERIOR WALL PER ARCHITECTURAL PLAN.

5 F5.02 *IN-BUILDING RISER ASSEMBLY*

SCALE: NONE

1" = 50'-0" (150, 100, 50, 0, 50)
1" = 40'-0" (120, 80, 40, 0, 40)
1" = 30'-0" (90, 60, 30, 0, 30)
1" = 20'-0" (60, 40, 20, 0, 20)
1/8" = 1'-0" (24, 16, 8, 0, 8)
1/4" = 1'-0" (12, 8, 4, 0, 4)

IDENTIFICATION STAMP
DIV. OF THE STATE ARCHITECT
APP: 02-123307 INC:
REVIEWED FOR
SS ☑ FLS ☑ ACS ☑
DATE: 10/15/2025

Owner:

WASHINGTON UNIFIED SCHOOL DISTRICT

6041 SOUTH ELM AVE, FRESNO, CA 93706

Project Name:

STUDENT SERVICES

Project Address:

WASHINGTON UNION HIGH SCHOOL

6041 SOUTH ELM AVE, FRESNO, CA 93706

integrated designs
by SOMAM, Inc.

ARCHITECTURE
ENGINEERING
INTERIOR DESIGN

6011 N. FRESNO STREET, SUITE 130
FRESNO CALIFORNIA 93710
P:(559) 436-0881 F:(559) 436-0887
E: design@somam.com
integrateddesigns.com

Ownership of Documents

This document, the ideas and designs incorporated herein, as an instrument of Professional Service is the property of Integrated Designs by SOMAM Inc. and is not to be used, in whole or in part for any other project without written authorization.

© COPYRIGHT

Stamp:

REGISTERED PROFESSIONAL ENGINEER
DEEPAK D. CHINA
No. 35784
Exp. 03-31-26
MECHANICAL
STATE OF CALIFORNIA

Sheet Title:

DETAILS

Job No.:

5613

Sheet No.:

F5.02

Release: V2 Date: